Jack JK-5559

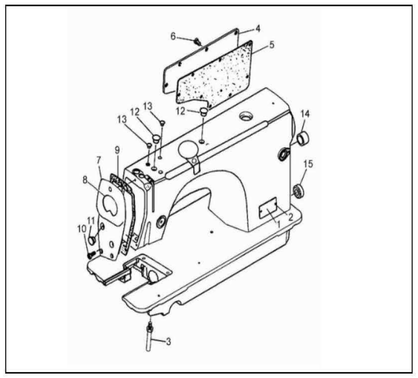
Sewing Machine Part Book

2 pages

JACK

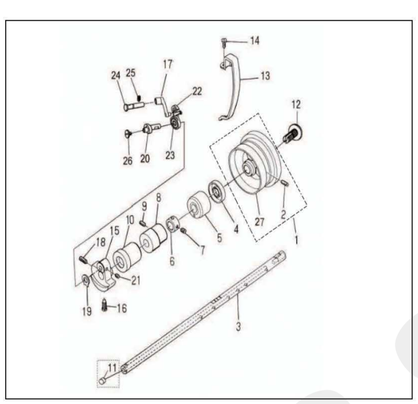
JK-5559高速侧切刀平缝机

零件手册



1. 机壳分组件 Arm bed components

序号 NO.	公司件号 Part NO.	名称PartName	零件描述 Description	数量 Number
1	10137001	型号牌	Model pldte	1
2	R03001	型号牌铆钉	Model pldte rivet	2
3	101121001	底板支柱	Bed screw stud	4
4	300097	后窗板	Side plate	1
5	10322001	后窗板垫	Gasket	1
6	101311001	螺钉SM3/16＂×28 L=9	Screw SM3/16＂×28 L=9	8
7	301016	面板	Face plate arm	1
8	30337001	商标牌（线型商标牌）	Plate with trademark	1
9	12822001	面板垫	Gasket	1
10	128311001	面板螺钉SM3/16＂×28 L=14	Screw SM3/16＂×28 L=14	3
11	10122003	面板调节螺孔塞	Rubber plug	2
12	10122004	针杆曲柄螺孔塞	Rubber plug	2
13	10122005	挑线连杆铜螺孔塞	Rubber plug	1
14	10122006	送料调节器孔塞	Rubber plug	1
15	10122007	下轴工艺孔塞	Rubber plug	1

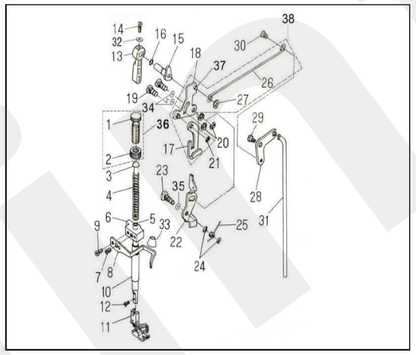


2. 上轴、挑线分组件 Main shaft、take-up components

序号 NO.	公司件号 Part NO.	名称 PartName	零件描述 Description	数量 Number
1	300092	上轮	Hand wheel	1
2	101215001	螺钉SM15/64＂×28 L=15	Screw SM15/64＂×28 L=15	2
3	12202001	主轴（无油）	Main shaft	1
4	12802010	上轴（有油）	Main shaft (oil)	1
5	10122008	上轴油封	Main shaft bushing	1
6	10103001	上轴后轴套	Main shaft bushing,rear	1
7	10108001	上轴挡圈	Thrust collar asm	1
8	101315002	螺钉SM1/4＂×40 L=6	Screw SM1/4＂×40 L=6	2
9	12203002	主轴中轴套	Brshing,intermediate	1
10	101315006	螺钉SM15/64＂×28 L=7	Screw SM15/64＂×28 L=7	1
	1220300100	上轴前轴套分部件	main shaft bushing,front	1
	1220300500	上轴前套分部件（有油）	main shaft bushing,front	1
11	10122012	上轴孔塞（有油）	Rubber plug	1
12	101330001	上轴安全螺钉SM5/16＂×24 L=14	Screw SM5/16＂×24 L=14	1
13	300611	挑线杆护罩（5559MD）	Thread takeup lever cover	1
14	300095	挑线杆护罩	Thread takeup lever cover	1
15	101311004	螺钉 SM2/16＂×28 L=6	Screw SM2/16＂×28 L=6	1
16	12804001	针杆曲柄 SM9/32＂×28 L=16	Counterweight	1
17	101311003	针杆曲柄定位螺钉SM9/32＂×28 L=16	Screw SM9/32＂×28 L=16	1
18	12205001	挑线连杆	Thread takeup crank	1
19	101315004	针杆曲柄紧固螺钉SM9/32＂×28 L=16	Screw SM9/32＂×28 L=16	1
20	101112003	针杆曲柄护板	Counterweight protecting plate	1
	1220400200	挑线曲柄分部件	Needle bar crank asm	1
20	1011000100	挑线曲柄分部件（有油）	Needle bar crank asm	1
21	101315002	送料轴挡圈螺钉 SM1/4＂×40 L=6	Screw SM1/4＂×40 L=6	2
22	1223800100	挑线杆分部件	Thread takeup lever asm	1
23	B04008	GB/278轴承6982Z	Needle bearing	1
24	12226001	挑线连杆销	Thread takeup crank shaft	1
25	101315001	上轮螺钉 SM15/64＂×28 L=15	Screw SM15/64＂×28 L=15	1
26	101317001	挑线曲柄螺钉(左旋)SM9/64＂×40 L=6	Screw SM9/64＂×40 L=6	1
27	300092	上轮	Hand wheel	1

3. 针杆、夹线分组件 Needle bar、thread tension components

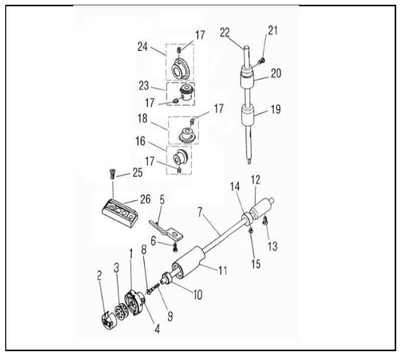
序号NO.	公司件号 Part NO.	名称 PartName	零件描述 Description	数量 Number
1	12206002	针杆连杆组件	Needle bar crank rod	1
	10105002	针杆连杆（有油）	Needle bar crank rod(oil)	1
2	B04008	GB/278轴承6982Z	Needle bearing	1
3	10138002	针杆连接柱	Needle bar connection asm	1
4	101311005	螺钉 SM9/64＂×40 L=6	Screw SM9/64＂×40 L=6	1
5	10109001	针杆连接柱滑块	slide block	1
6	10103009	针杆上衬套	Needle bar bushing,upper	1
7	10122013	针杆上衬套孔塞	Cap	1
8	10103010	针杆下衬套	Needle bar bushing, lower	1
9	10113009	针杆下轴套线勾	Needle bar thred guide	1
10	12802008	针杆	Needel bar(no oil)	1
	12802009	针杆（有油）	Needel bar(oil)	1
11	12813002	针杆线勾	Needel bar thread guide	1
12	101311006	支针螺钉 SM1/8＂×44 L=4.5	Screw SM1/8＂×44 L=4.5	1
13	10117001	机针(14#)	Needel	1
14	10113003	二眼线勾	Twdole thread eyelet	1
15	101311004	螺钉 SM3/16＂×28 L=6	Screw SM3/16＂×28 L=6	1
16	10113004	右线勾	Prsme thread guide ,right	1
17	101311007	右线勾螺钉 SM11/64＂×40 L=6	Screw SM11/64＂×40 L=6	1
18	10113005	左线勾	Prsme thread guide ,left	1
19	101311007	螺钉 SM11/64＂×40 L=6	Screw SM11/64＂×40 L=6	1
20	480003	夹线器座(电镀后)	Tension post socket	1
21	10127021	挑线簧(毛坯)	Take up spring	1
22	101320002	夹线螺钉SM1/4＂×40 L=17.5	Screw SM1/4＂×40 L=17.5	1
23	101315005	夹线螺母 SM3/64＂×40 L=5.5	Screw SM9/64＂×40 L=5.5	1
24	10126002	松线钉	Thread release pin	1
25	480001	夹线板	Tension disc	2
26	10112006	松线板	Tension disc holder	1
27	10127020	夹线簧	Tension spring	1
28	10112007	夹线制动板	Tension disc stopper	1
29	101316052	夹线螺母 SM1/4＂×40 L=10	Tension nut SM1/4＂×40 L=10	1
30	101315006	螺钉 SM15/64＂×28 L=7	Screw SM15/64＂×28 L=7	2
31	10126003	松线辅钉	Tension release supproting p	1
32	B05012	GB/T896-1986挡圈4	Snap ring4	1
33	10128001	松线辅钉垫片	Washer plate	1
34	10127003	松线辅钉弹簧	Tension release pin spring	1
35	10109002	针杆挍头滑块导轨	Needel bar trough	1
36	101311008	滑块导轨螺钉 SM11/64＂×40 L=8	Screw SM11/64＂×40 L=8	2
37	10123002	针杆上轴塞	Oil felt for needel bar	1
38	10122014	O型圈	Rubber ring	1
39	11419001	割线刀	Knife	1
40	401S11040	割线刀螺钉 SM11/64＂×40 L=8	Screw SM9/64＂×40 L=5	2
41	1143100100	绕线器组件	Bobbin winder base component	1
42	114311003	绕线器松螺钉 SM11/64＂×28 L=10	Screw SM11/64＂×28 L=10	3
43	400507	夹线器组件	thread tension asm.	1
44	101315006	夹线器螺钉	thread tension screw	1



4. 压料分组件 Presser bars components

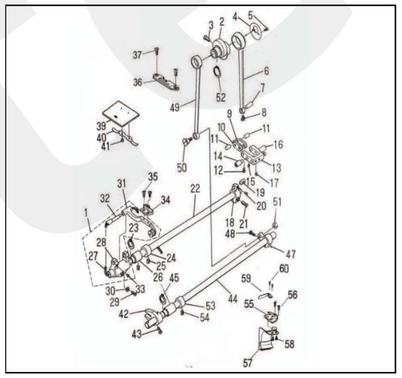
序号 NO.	公司件号 Part NO.	名称 PartName	零件描述 Description	数量 Number
1	10111036	调压螺钉	Presser spring regulator	1
2	10111034	调压螺母 M1/2＂×28 L=8	NutS M1/2＂×28 L=8	1
3	10102003	调压导杆	Presser guide bar	1
4	10127005	调压簧	Presser spring	1
5	12800004	压杆分部件	Presser bar	1
6	12809003	压杆导架	Needle bar guide bracket	1
7	101315007	压杆导架螺钉 SM1/4＂×40 L=8	Screw SM1/4＂×40 L=8	1
8	10413003	缓线调节钩	Presser bar thread guide	1
9	101311005	螺钉 SM9/64＂×40 L=6	Screw SM9/64＂×40 L=6	2
10	10103012	压杆衬套	Presser bar bushing lower	2
11	1281600300	活压脚部件(3/16")	presser foot asm.	1
	1281600200	活压脚部件2(1/8")	presser foot asm.	1
12	101311009	螺钉 SM9/64＂×40 L=10.5	Screw SM9/64＂×40 L=10.5	1
13	10111028	压脚扳手	Hand lifter	1
14	101311010	压脚扳手螺钉 SM9/64＂×40 L=11	Screw SM9/64＂×40 L=11	1
15	1011000200	压脚扳手凸轮分部件	Hand lifter cam asm.	1
16	10128002	压脚扳手螺钉型圈	Rubber ring	1
17	10112010	压脚升降板	Lifting lever	1
18	10112011	抬压脚楫杠杆	Hand lifter link	1
19	101320001	前杠杆螺纹销 SM5/16＂×24 L=5.5	Link shaft SM5/16＂×24 L=5.5	2
20	B05009	螺纹销开口挡圈	Snap ring	2
21	B05009	升降板连接特制开口挡圈	Lifting lever ring	3
22	10112012	松线顶板	Tension release plate	1
23	101320002	松线顶板螺钉铰销	Tension release shaft	1
24	B05003	螺纹销开口挡圈	Snap ring	1
25	10127008	松线顶板复位簧	Tension release return spring	1
26	10112013	抬压脚拉杆	Lifting lever connecting rod	1

序号 NO.	公司件号 Part NO.	名称 PartName	零件描述 Description	数量 Number
27	H05009	拉杆开口挡圈	Snap ring	1
28	10112014	抬压脚后杠杆	Lifting lever link	1
29	101320003	后杠杆轴位螺钉SM5/64＂×28 L=6.4	Hinge screw SM5/64＂×28 L=6.4	1
30	101320004	抬牙脚拉杆螺钉SM3/16＂×32 L=5	Hinge screw SM3/16＂×32 L=5	1
31	10112015	抬压脚顶杆	Connecting rod vertical	1
32	10128002	压脚扳手螺钉垫圈	Washer	1
33	30122022	压杆防油套	Presser bar defend oil bushir	1
34	10128015	螺纹销橡胶垫圈(厚)	Washer	2
35	10128016	螺纹销橡胶垫圈(薄)	Washer	1
36	10111027	调压螺钉组件	Presser spring regulator asm	1
37	10126005	抬压脚杆杆轴	Presser foot lifting lever sh	1
38	1011200100	抬压脚前杠杆组件	Hand lifter link asm	1



5. 勾线分组件 Hook driving shaft components

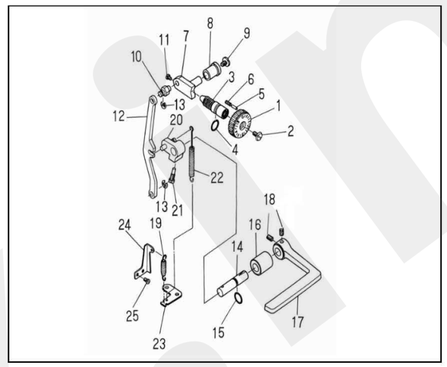
序号NO.	公司件号 Part NO.	名称 PartName	零件描述 Description	数量 Number
1	10118504	旋梭（广缨）	Hook asm	1
1	10118001	旋梭（国产）	Hook asm	1
2	10118501	梭壳（广缨）	Bobbin case asm	1
	10118002	梭壳（国产）	Bobbin case asm	1
3	10118003	梭心	Bobbin	1
4	101S15008	旋梭紧固螺钉 SM11/64＂×40 L=4	Screw SM11/64＂×40 L=4	1
5	10112016	旋梭定位钩	Positioning finger	1
6	10111011	旋梭定位钩螺钉 SM11/64＂×40 L=9.5	Screw SM11/64＂×40 L=9.5	1
7	10102006	下轴	Hook driving shaft	1
8	10S30005	下轴限油螺钉 SM3/16＂×32 L=13	Screw SM3/16＂×32 L=13	1
9	10123003	下轴限油芯	Oil wick	1
10	10122015	下轴油封	Thust collar	1
11	1010301300	下轴前轴套分部件	Bushing asm. Front	1
12	10403012	下轴后轴套	Bushing ,rear	1
13	101S15006	螺钉 SM15/64＂×28 L=7	Screw SM15/64＂×28 L=7	1
14	10108002	下轴挡圈	Thust collar asm.	1
15	101311012	下轴挡圈螺钉 SM11/64＂×40 L=4.8	Screw SM11/64＂×40 L=4.8	2
16	10425001	下轴伞齿轮	Spline asm.	1
17	101S15009	螺钉 SM1/4＂×40 L=5.5	Screw SM1/4＂×40 L=5.5	8
18	10425002	竖轴下伞齿轮	Gear asm large	1
19	10403013	竖轴下轴套	Upright shaft bushing,ower	1
20	10403014	竖轴上轴套	Bushing,upper	1
21	101S15006	螺钉 SM15/64＂×28 L=7	Screw SM15/64＂×28 L=7	1
22	10102007	竖轴	Upright shaft	1
23	10425003	竖轴上伞齿轮	pinion asm.	1
24	10425004	上轴伞齿轮	Gear asm	1
25	101S11011	旋梭定位钩螺钉SM11/64＂×40 L=9.5	Screw SM11/64＂×40 L=9.5	1
26	12804004	定刀片固定架	Fixed blade fixed frame	1



6. 送料分组件 Feed mechanism components

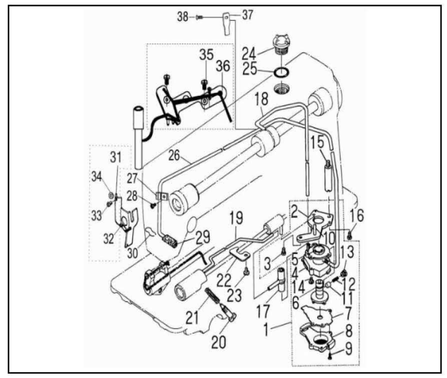
序号NO.	公司件号 Part NO.	名称 PartName	零件描述 Description	数量 Number
1	400672	牙架座组件(成品)（5559W）	Feed rocker asm.(5559W)	1
	400689	牙架座组件(成品)（5559WD）	Feed rocker asm.(5559WD)	1
2	400002	送料偏心轮	Feed driwe eccentric cam	1
3	101S11013	送料偏心轮螺钉 SM1/4＂×40 L=13	Screw SM1/4＂×40 L=13	2
4	10112017	送料偏心轮盖板	Thust collar	1
5	113S11003	螺钉 SM9/64＂×40 L=5	Screw SM9/64＂×40 L=5	2
5	101S11005	螺钉 SM9/64＂×40 L=6	Screw SM9/64＂×40 L=6	2
6	400001	送料连杆	Rocker shaft connecting rod	1
7	10126006	送料连杆销	Walking foot pin	1
8	101S11005	螺钉 SM9/64＂×40 L=6	Screw SM9/64＂×40 L=6	1
9	10409004	送料长摆动板	Walking foot link	2
10	10409005	送料短摆动板	Connecting link	2
11	10126007	送料摆动板座杆销	Walking foot pin	2
12	101S11005	螺钉 SM9/64＂×40 L=6	Screw SM9/64＂×40 L=6	2
13	10101002000	送料摆动板座分部件	Walking foot adjusting link	1
14	10126009	送料摆动板座左销	adjusting link fulcrum shaft	1
15	101S15010	左销螺钉 SM15/64＂×28 L=10.5	Screw SM15/64＂×28 L=10.5	1
16	10126010	右销螺钉 SM15/64＂×28 L=10.5	adjusting link fulcrum shaft	1
17	101S15010	左销螺钉 SM15/64＂×28 L=10.5	Screw SM15/64＂×28 L=10.5	1
18	10104002	送料曲柄	Feed rocker shaft crank asm	1
19	10126011	送料曲柄销	Walking foot pin	1
20	101S11005	螺钉 SM9/64＂×40 L=6	Screw SM9/64＂×40 L=6	1
21	101S11016	螺钉 SM3/16＂×28 L=14	Screw SM3/16＂×28 L=14	1
22	10102008	送料轴	Feed rocker shaft	1
23	H03001	GB/T896.1-1986挡圈15	Retaining ring	1
24	10108003	送料轴挡圈	Thust collar asm.	1
25	101S15002	螺钉 SM1/4＂×40 L=6	Screw SM1/4＂×40 L=6	4
26	10402015	轴套	Feed tooler shaft bushing	2
27	10423005	送料轴油线	Oil wick	2
28	10101003	竖轴下伞齿轮	Feed rocker asm.	1
29	101S11016	螺钉 SM3/16＂×28 L=14	Screw SM3/16＂×28 L=14	1
30	10128003	牙架座螺钉垫圈	Washer	1
31	10101042	牙架座	Feed bar asm.	1
32	10401007	牙架销	Feed bar shaft	1
33	101S11025	螺钉 SM11/64＂×40 L=7	Screw SM11/64＂×40 L=7	1
34	12814001	送料牙	Feed dog	1
35	101S11018	送料牙螺钉 SM1/8＂×44 L=6	Screw SM1/8＂×44 L=6	2

序号 NO.	公司件号 Part NO.	名称 PartName	零件描述 Description	数量 Number
36	12815001	针板1/8	Throat plate	1
37	101S17002	针板螺钉 SM11/64＂×40 L=6.4	Screw SM11/64＂×40 L=6.4	2
39	10115002	滑板	Slide plate	1
40	10127009	推板簧	Bed slide spring	1
41	101S11019	推板簧螺钉 SM3/32＂×56 L=2	Screw SM3/32＂×56 L=2	2
42	10104003	抬牙叉形曲柄	Driving shaft crank asm. Front	1
43	101S11020	抬牙轴曲柄螺钉 SM11/64＂×40 L=10.5	Screw SM11/64＂×40 L=10.5	1
44	112020001	抬牙轴	Feed Driving shaft	1
45	H03001	GB/T896.1-1986挡圈15	Retaining ring	1
47	10104004	抬牙后曲柄	Rear crank asm.	1
48	101S11016	螺钉 SM3/16＂×28 L=14	Screw SM3/16＂×28 L=14	1
49	400093	抬牙连杆	Connecting rod	1
50	101320005	抬牙连杆轴位螺钉 SM9/32＂×28 L=4	Hinge Screw SM9/32＂×28 L=13.5	1
51	101S16003	抬牙连杆轴位螺母 SM9/32＂×28 L=4	Nut SM9/32＂×28 L=4	1
52	H03002	GB/T896.1-1986挡圈20	Snap ring	1
53	10108003	抬牙轴挡圈	Thust collar asm.	1
54	101S15002	送料轴挡圈螺钉 SM1/4＂×40 L=6	Screw SM1/4＂×40 L=6	2
55	12815004	辅助针板	Throat plate	1
56	101S17002	针板螺钉 SM11/64＂×40 L=6.4	Screw SM11/64＂×40 L=6.4	2
57	12812003	碎布屑导向	Waste material	1
58	101S11019	推板簧螺钉 SM3/32＂×56 L=2	Screw SM3/32＂×56 L=2	2
59	12812002	碎布屑导向U	Waste material U	1
60	401S11040	碎布屑导向U螺钉 SM9/64＂×40 L=5	Screw SM9/64＂×40 L=5	2



7. 送料调节分组件 Feed regulating components

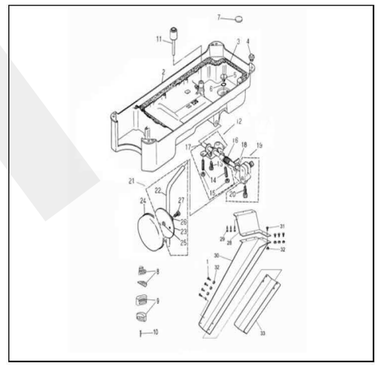
序号 NO.	公司件号 Part NO.	名称PartName	零件描述Description	数量 Number
1	10120001	送料座旋钮（新）	Feed dial	1
2	101S11022	送料座旋钮螺钉SM3/16＂×28 L=18	Screw SM3/16＂×28 L=18	1
3	10426006	送料调节螺柱	Feed regulator screw	1
4	10122016	倒送料轴O形圈	Rubber ring	1
5	10126015	送料座轴台销	Pin	1
6	10127010	送料座轴台簧	Spring	1
7	10401004	送料调节器	Feed regulator	1
8	10403017	送料调节器轴套	Feed regulator bushing	1
9	101S11023	送料调节器螺钉 SM3/16＂×28 L=6.5	Screw SM3/16＂×28 L=6.5	1
10	10126016	倒送料连杆销	Feed regulator pin	1
11	101S11005	螺钉 SM9/64＂×40 L=6	Screw SM9/64＂×40 L=6	2
12	10105005	倒送料连杆	Feed regulator connecting rod	1
13	H05003	GB/T896-1986挡圈5	Snap ring	2
14	10102010	倒送料轴	Feed reverse shaft	1
15	10122017	倒送料轴O形圈	Rubber ring	1
16	10103021	倒送料轴轴套	Feed lever metal	1
17	300208	倒送料扳手	Reverse feed control lever	1
18	101315013	送料座扳手定位螺钉 SM1/4＂×40 L=10	Screw SM1/4＂×40 L=10	2
19	10127012	摆动板座复位簧	Adjusting link spring	1
20	10404005	倒送料曲柄	Feed reverse arm asm.	1
21	101S17003	螺钉 SM1/4＂×40 L=20	Screw SM1/4＂×40 L=20	1
22	10127011	倒送料拉簧	Feed reverse spring	1
23	11412081	拉簧固定板	Feed spring hook	1
24	11412070	摆动板座复位板	Adjusting link spring guide	1
25	101S11025	复位板螺钉 SM11/64＂×40 L=7	Screw SM11/64＂×40 L=7	1



8. 润滑分组件 Lubrication components

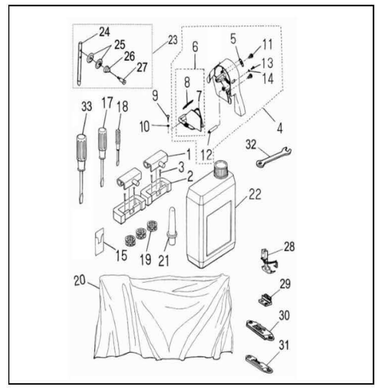
序号 NO.	公司件号 Part NO.	名称PartName	零件描述Description	数量 Number
1	1012000100	油泵分部件	Lubricating oil pump asm.	1
2	10112020	油泵安装板	Oil pump installing base	1
3	101S11026	油泵安装螺钉	Screw	1
4	10120001	油泵体	Oil pump	1
5	10103022	油泵体衬套	Oil pump bushing	1
6	10111003	油泵叶轮	Oil pump impeller	1
7	10112021	油泵叶轮托板	Oil pump impeller cover	1
8	10111007	油泵盖	Lubricating oil pump cover	1
9	101S30006	螺钉	Screw	1
10	10121001	下轴供油管	Hook driving shaft oil tube	1
11	10122018	回油柱塞	Plunger	1
12	101127013	柱塞簧	Plunger spring	1
13	101S30007	螺钉 SM9/32＂×32 L=7	Screw SM9/32＂×32 L=7	1
14	101S11031	螺钉	Screw	3
15	101S30008	油泵座接螺柱 SM15/64＂×28 L=7	Oil pump support SM15/64＂×28 L=7	1
16	101S11011	螺钉 SM11/64＂×40 L=9.5	Screw SM11/64＂×40 L=9.5	1
17	10136001	供油管接头	Rubber joint	1
18	11421007	上轴供油管	Main shaft oil tube	1
19	10121006	旋梭供油管	Oil tube	1
20	101S30009	旋梭油量调节螺柱SM15/64＂×28 L=25	Oil adjusting screw SM15/64＂×28 L	1

序号NO.	公司件号 Part NO.	名称PartName	零件描述Description	数量 Number
21	10127014	旋梭油量调节簧	Spring	1
22	10112022	旋梭供油管压板	Tube holder(lower)	1
23	101S11026	油泵安装螺钉SM15/64＂×28 L=9	Screw SM15/64＂×28 L=9	1
24	12111004	油窗	Oil slight window	1
25	10122019	油窗O型圈	Rubber ring	1
26	10121007	回油管	Oil return tube	1
27	10127015	回油毡夹	Oil return tube holder	1
28	101S11004	螺钉 SM3/16＂×28 L=6	Screw SM3/16＂×28 L=6	1
29	10123006	回油毡	Oil felt	1
30	10127015	回油毡夹	Oil felt presser	1
31	10412007	面部防油板（有油）	Arm oil shield (oil)	1
32	10423005	油线(根)	Oil wick	1
33	101S11027	螺钉 SM1/8＂×44 L=4	Screw SM1/8＂×44 L=4	1
34	10128005	垫片	Wahser	1
35	101S11010	螺钉 SM9/64＂×40 L=11	screw SM9/64＂×40 L=11	2
36	10112025	油线固定板	Oil wick setplate asm.	1
37	10112026	回油管压板	Presser	1
38	101S11033	螺钉 SM3/16＂×28 L=5.8	Screw SM3/16＂×28 L=5.8	1



9. 油盘、膝抬压脚部分组件Oil reservoir、knee lifter components

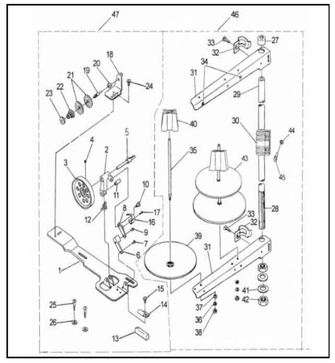
序号NO.	公司件号 Part NO.	名称PartName	零件描述Description	数量 Number
1	S13002	导屑连接滑板螺钉 M4x8	Screw M4x8	4
2	12801006	油盘	Oil reservori	1
3	10122020	油盘垫	Gasket	1
	10122060	油盘垫	Gasket	1
4	10122031	机头座垫	Rubber cushion	4
	10122031	机头座垫（外销）	Rubber cushion	4
5	101S11028	螺钉 SM8×1＂ L=7	Screw SM8×1＂ L=7	1
6	10122021	O型圈	Rubber ring	2
7	10131001	油盘磁铁	Oil reservoir magnet	1
8	10122022	油盘座垫（内销）	Oil reservoir felt cushion	2
	10122032	油盘座垫（外销）	Oil reservoir felt cushion	2
9	10122023	油盘支架（内销）	Oil reservoir rubber	2
	10122033	油盘支架（外销）	Oil reservoir rubber	2
10	101S30010	油盘座钉（外销）	Nail	4
11	10111005	抬压脚顶杆	Knee press lifter rod	1
12	10112027	抬压脚双向曲柄	Connecting rod, vertical	1
13	101S12002	螺钉 M5 L=26	Screw M5 L=26	1
14	101S15012	螺钉 M5 L=30	Screw M5 L=30	2
15	101S16004	双向曲柄限位调节螺母M5 L=4	Net M5 L=4	2
16	10127016	双向曲柄扭簧	Spring	1
17	10102011	抬压脚轴	Knee press rod	1
18	H05010	GB/T896-1986挡圈11	Snap ring	2
19	10101008	抬压脚摇纵杆节头	Bearing bracket	1
20	101S12003	螺钉 M5 L=16	Screw M5 L=16	1
21	1011202800	操纵杆部件	Knee press plate asm.	1
22	10112028	操纵杆	Knee press plate rod	1
23	10112029	操纵板	Knee press plate	1
24	10112024	操纵板软垫	Knee press plate cover	1
25	10122025	操纵杆垫	Rubber	1
26	10112030	操纵板节头	Knee press plate holder	1
27	101S12004	螺钉 M5 L=11	Screw M5 L=11	1
28	301012	导屑滑板支架	Wood material chute holder	1
29	128S30001	导屑滑板支架木螺钉M4x16	Wood screwM4x16	3
30	301011	导屑滑板	Wood material chate	1
31	S13001	导屑板滑板螺钉	Screw	4
32	N01015	GB/T6170-1986螺母M4(镀锌)	Nut M4	8
33	B01015	导屑连接滑板	Waste material cute	1



10. 机头附件(1) Machine head accessories(1)

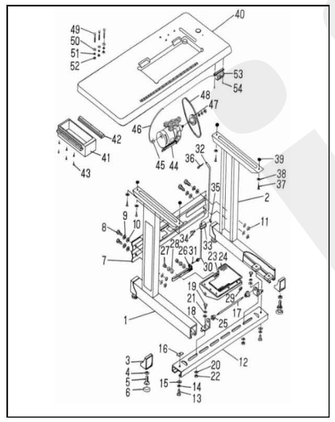
序号NO.	公司件号 Part NO.	名称PartName	零件描述Description	数量 Number
1	1011203100	机头连接构部件	Machine hinge plate asm.	2
2	10122060	机头连接座构	Machine hinge plate	2
3	101S30010	机头连接座构螺钉	Nail	4
4	12811003	皮带罩（新）	Belt cover,A	1
5	10111008	前罩壳安装架	Belt cover,A cap	1
6	1011100900	上轮后罩壳部件	Belt cover,B asm.	1
7	10111009	上轮后罩壳	Belt cover,B	1
8	1011101000	后罩壳盖部件	Belt cover,B cover asm.	1
9	101S30011	木螺钉	Wood screw	2
10	10128006	垫圈	Washer	2
11	101S11029	前罩壳紧固螺钉	Belt cover,A screw	2
12	101S30012	后罩壳支柱	Belt cover support	1
13	101S11030	螺钉 SM3/16＂×28 L=14	Screw SM3/16＂×28 L=14	1
14	10128007	垫圈	Washer	1
15	10117001	机针	Needel	1包
17	10131003	螺丝刀（中）	Screw driver,mendium	1
18	10131004	螺丝刀（小）	Screw driver,small	1
19	10118003	梭心	Bobbin	1
20	10131005	机头罩	Machine head cover	1

序号 NO.	公司件号 Part NO.	名称 PartName	零件描述 Description	数量 Number
21	10111011	机头支柱	Machine rest pin	1
22	10111101200	油箱组件	Oil reservoir asm.	1
23	10113007G0	过线器部件	Needel thread gudie pin as	1
24	10112008	过线柱	Needel thread gudie pin	1
25	10112009	过线夹线板	Tension disc	2
26	10127004	过线夹线簧	Tension spring	1
27	101S30003	螺钉SM3/16"×28 L=14	Screw SM3/16"×28 L=14	1
28	1281600300	送压脚部件3/16	Presser bar bushing lower	1
29	12314002	送料牙1/4	Feed dog	1
30	12815002	针板1/4	Throat plate 1/4	1
31	12815003	针板3/16	Throat plate 1/8	1
32	20131042	扳手7#	Spanner 7#	1
33	10131002	螺丝刀（大）	Screw driver,mendium	1



10.机头附件(2) Machine head accessories(2)

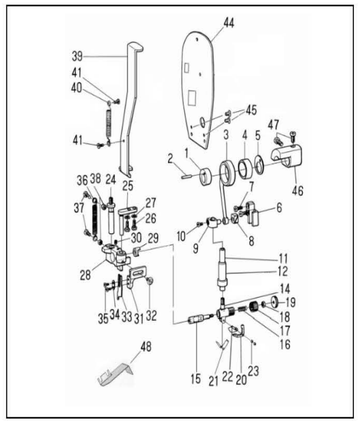
序号 NO.	公司件号 Part NO.	名称PartName	零件描述Description	数量 Number
1	10112032	绕线座	Bobbin winder base asm.	1
2	10101009	绕线架	Thread winfer base asm.	1
3	10101010	绕线轮	Thread winfer asm.	1
4	S04006	螺钉	Screw	1
5	10102012	绕线轴	Bobbin winder shaft	1
6	10112033	绕线座连杆	Conneyting rod	1
7	10126018	绕线座连杆销	Conneyting rod pin	1
8	10112034	绕线架连杆	Bobbin winder frame rod	1
9	10126018	绕线架连杆销	Bobbin winder frame rod pi	1
10	10120006	绕线架连杆轴位螺钉	Screw	1
11	10126019	绕线架销	Bobbin winder frame pin	1
12	10127017	绕线架簧	Bobbin winder frame sprin	1
13	10122027	绕线轮制动垫	Rubber brake	1
14	10112035	制动垫夹	Pressser plate	1
15	S04006	螺钉	Screw	1
16	10112036	换线跳板簧	Bobbin winder spring	1
17	S04017	过线夹线螺钉	Hinge screw	1
18	10112037	过线架座	Thread tension bracket ass	1
19	101S30013	螺钉	Screw	1
20	10108005	过线夹线板挡圈	Bobbin winder tension dis	2
21	10112038	过线夹线板	Tension disc	1
22	10127018	过线夹线簧	Tension spring	1
23	101S16005	螺母	Nut	1
24	S04006	螺钉	Screw	2
25	101S30014	木螺钉	Wood screw	2
26	10128008	垫圈	Washer	1
27	10122028	线架杆顶防护橡皮	Spool rest rod rubber cap	1
28	10131008	线架杆下节	Spool rest rod (lower)	1
29	10131009	线架杆上节	Spool rest rod (upper)	1
30	10112039	线架杆接头	Thread rested jiont	2
31	10112040	线架过线杆	Thread guide asm.	2
32	10112041	线架过线夹	Thread guide asm jiont	2
33	S04013	螺钉	Screw	2
34	10113010	过线圈	Thread guide ring	2
35	10131010	线盘钉	Spool pin	2
36	10128009	弹簧垫圈	Spring washer	2
37	101S16006	螺母	Nut	2
38	101S16006	螺母	Nut	2
39	10111014	线团防松垫	Spool vibration stopper	2
40	10128010	垫圈	Washer	2
41	N02003	螺母	Nut	2
42	S04018	螺钉	Screw	2
43	10123008	线盘垫	Spool rest cushion	2
44	N01002	螺母	Nut	2
45	S04018	螺钉	Screw	1
46	10131007G0	线架组件	Thread Stand Components	1
47	1013100600	过线器分部件	Bobbin winder unit	1



11.机架、台板、电器分组件 Machine table electric components

序号 NO.	公司件号Part NO.	名称PartName	零件描述Description	数量 Number
1	1011204200	过线部件（左）	Stand side asm.left	1
2	1011204300	过线部件（右）	Stand side asm.right	1
3	10111015	边架座垂	Rubber cushion	4
4	N01010	螺母	Nut	4
5	101S30015	调节座	Screw	4
6	10122029	调节座橡胶	Space ring	4
7	10112044	横档	Stand side support	1
8	L02014	横档连接螺栓	Screw	4
9	10128011	垫圈	Space washer	4
10	N01010	垫圈	Washer	8
11	N01011	螺母	Nut	4
12	10112045	踏板轴档	Treadle brace	1
13	L02014	踏板轴档螺栓	Screw	2
14	10128011	垫圈	Spring washer	2
15	N01010	垫圈	Washer	2
16	10112046	踏板轴档定位螺母板	Treadle brace locknut plat	2
17	10102013	踏板轴	Treadle shaft	1

序号 NO.	公司件号 Part NO.	名称PartName	零件描述Description	数量 Number
18	10112047	踏板轴座	Treadle bravket	2
19	L02014	踏板轴座螺栓	Screw	2
20	N01010	垫圈	Washer	4
21	10128011	弹簧垫圈	Spring washer	2
22	N01010	螺母	Nut	2
23	10112050	踏板	Trcable	1
24	10122030	踏板垫	Gas ket	1
25	10103023	踏板杆套	Collar	2
26	10112049	踏板杠杆	Treadle pitman	1
27	L02015	踏板杠杆螺栓	Screw	2
28	W01003	垫圈	Washer	4
29	N01012	螺母	Nut	2
30	10112050	下拉杆	Pitman rod,lower	1
31	10127019	拉杆弹簧	Spring	1
32	10112051	上拉杆	Pitman rod,upper	1
33	10112052	拉杆接头	Joint	1
34	L02015	拉杆接头螺栓	Joint screw	1
35	N01012	螺母	Nut	1
36	10129001	上拉杆开口销	Pitman rod split pin(upper)	1
37	101S30016	台板木螺钉	Table wood screw	4
38	10128012	垫圈	Table wood screw washer	4
39	10128013	台板垫圈	Table washer	4
40	10132002	台板	Table	1
41	10111016	抽斗	Drawer	1
42	10111017	抽斗导轨	Drawer rail	2
43	101S30017	抽斗导轨木螺钉	Drawer rail wood screw	6
44	10133001	GPC4024	Motor GPC4024 motor	1
45	10126002	电机接线插头	Motor connecting wire plug	1
46	10130003	电机接线	Motor wire	1
47	10135004	电动机带轮	Motor pulley	1
48	10135002	机头传动带	Machine driving belt	1
49	101S30018	螺钉	Screw	3
50	10128014	垫圈	Washer	3
51	10128011	垫圈弹簧	Spring washer	3
52	N01011	螺母	Nut	3
53	10130004	电源开关	Power source switch	1
54	101S30019	电源开关木螺钉	Power source switch wood scre	2

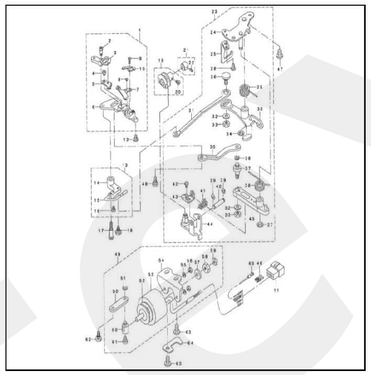


12.切刀专用部件 Knife Components

序号 NO.	公司件号 Part NO.	名称PartName	零件描述Description	数量 Number
1	12710002	切刀凸轮	Xinfe cam	1
2	12726001	切刀凸轮销	Pin	1
3	12705003	切刀连杆	Xinfe driving rod	1
4	1272400100	切刀连杆轴承	Knife needel bearing	1
5	12812005	切刀凸轮盖板	Thrust plate	1
6	12809001	切刀滑块导轨	Slide bolck guide	1
7	101S11011	旋梗定位钩螺钉	Screw SM11/64"X40 L=9.5	2
8	12809002	切刀滑块	Crank slide blick	1
9	12804002	切刀轴连接柱	Knife driving stud connection as	1
10	209S11009	止搭扎头螺钉	Screw SM9/64"x40 L=9.5	1
11	12802006	切刀轴（DLC）	Knife driving stud （DLC）	1
	12802011	切刀轴（有油）	Knife driving stud （oil）	1
12	12803002	切刀轴衬套	Bushing	1
14	12804003	切刀离合支架	Knife driving rod clutch retaine	1
15	12826001	切刀离合销	Knife driving rod clutch pin	1
16	12827001	切刀离合销簧	Spring	1
17	12801002	切刀离合销盖	Cap	1
18	201S16003	NO3螺母	Nut	1
19	12811001	切刀离合销旋钮	Knob	1
20	12805001	切刀放松杆	Knife release lever	1
21	12827002	切刀放松杆簧	Spring	1
22	12826002	切刀放松杆销	Pin	1
23	N01018	GB/T6170-1986六角螺母	GB/T6170-1986M2.5 Nut M2.5	2
24	12802003	切刀座轴	Knife driving block stud	1
25	12805002	切刀座导杆	Guide stud for Knife driving	1
26	209S12001	切刀座导杆螺钉	Screw SM11/64"X40 L=8	2
27	12828001	切刀座导杆螺钉垫圈	Washer	2
28	1280106300	切刀座部件组件	Knife driving block asm	1
29	12803003	切刀座部件右垂	Knife driving block right	1
30	125S15003	牙架连杆挡圈螺钉	Screw SM11/64"x40 L=5	1
31	12801004	切刀架	Knife holder	1
32	128S17001	切刀架螺钉	Screw SM11/64"X40 L=8	1
33	12819001	上切刀	Knife	1
34	12812006	上切刀压板	plate	1
35	101S11018	送料牙螺钉	Screw SM1/8"x44 L=6	1
36	12827003	切刀座拉簧	Tension spring	2
37	101S11011	旋梗定位钩螺钉	Screw SM11/64"X40 L=9.5	1
38	201S16003	NO3螺母	Nut	2
39	12812007	切刀座复位板	Knife postioning plate	2
40	12827004	复位板拉簧	Tension spring	1
41	128S20001	轴位螺钉螺钉	Screw SM9/64"X40 l=4.5	2
44	12812008	复位板罩板	Face plate cover	1
45	101S17002	针板螺钉	Screw SM11/64"x40 L=7.5	2
46	12801005	切刀连杆平衡锤	Balance	1
47	402S11012	螺钉	Screw SM15/64"X28	2
48	12812009	废布屑盖（S559W）	Waste material cover（S559W）	1

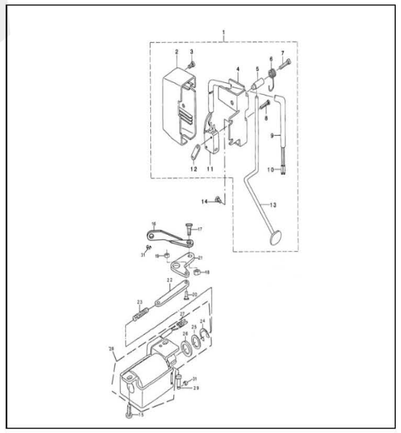
13.JK-5559WD切线装置部件（圆刀）Thread trimmer components

序号NO.	公司件号 Part NO.	名称PartName	零件描述Description	数量 Number
1	11230004	14孔接线器	Housing 14P	1
	11230015	12孔接线器	Housing 12P	1
2	11230005	电线插针	Pin contact	1
3	11212025	地线	Ground wire asm.	1
4	113S11001	螺钉	Screw SM11/64"x40 L=12	2
5	10128003	牙架座螺钉垫圈	Washer	2
6	11312004	刀架压板座组件	Partiality shank asm.	2
7	113S17002	活动刀固定螺钉	Screw	2
8	11319003	活动刀（厚料长槽）	Motorial knife	1
9	113S16001	螺母	Nut SM11/64"x40	1
10	11307001	剪线刀架	Knife bracket	1
11	113S15002	定刀调节螺钉	Screw	1
12	11319001	定刀	Secant knife	1
13	11312003	护针片	Protect needle patch	1
14	113S17001	螺钉 SM9/64"x40 L=5	Screw SM9/64"x40 L=5	1
15	11304001	曲柄	Thread shear rock asm	1
16	11322001	驱动曲柄止动块	Positioning block	1
17	11327001	弹簧	Spring	1
18	S05004	螺钉 M5 L=14	Screw M5 L=14	2
19	12803008	切线轴套	Thread shear cam rock asm a	1
20	113S14002	螺钉 SM11/64"x40 L=5.5	Screw SM11/64"x40 L=5.5	1
21	11503005	驱动曲柄轴衬套	Short bush	1
22	116S14005	螺钉 SM1/4"x40 L=10	Screw SM1/4"x40 L=10	2
23	11309030	凸轮顶柱	Pole	2
24	11310004	凸轮	Thread shear cam	1
25	W02004	垫圈 GB/T93-1987	Washer 6	1
26	201S11009	螺钉 SM9/64"x40 L=5.5	Screw SM9/64"x40 L=5.5	1
27	113S20001	连杆螺钉 SM11/64 X40	Screw SM11/64"x40 L=5.5	2
28	11312005	连杆	Knife shaft connecting rod	1
29	12802015	切线凸轮曲柄轴	Thread shear rock asm shaft	1
30	11322002	扭簧端盖	Spring cover	1
31	11327002	弹簧	Spring	1
32	1304005500	剪线驱动组件	Thread shear rock arm shaft	1
33	116S14003	针杆曲柄销定位螺钉	Screw	1
34	11324001	滚柱	Rool shaft assy	1
35	113S16001	螺母 SM11/64"x40 D=3	Nut SM11/64"x40 D=3	1
36	11302002	轴	Thread shear shaft	1
37	W02006	挡圈	Retaining ring	1
38	11322003	电磁铁缓冲垫	Magentic plug cushion mat	1
39	11309001	切线电磁铁顶销	Washer	1
40	112S16006	螺母 SM1/4"×40	Nut SM1/4"×40	1
41	001004	型圈 4×1.8	Washer	1
42	101S11026	油泵安装螺钉	Screw	1
43	N01001	螺母 M4	Nut M4	2
44	11312006	切线磁铁支架	Magentic plug cushion mat	1
45	11312007	松线座	Thread loose seat	1
46	11327003	弹簧	Spring	1
47	113S20002	螺钉 SM1/4"×28 L=13	Screw SM1/4"×28 L=13	1
48	1133001100	剪线电磁铁组件	Magentic plug	1



14.JK-5559WD切线装置部件（平刀）Thread trimmer components

序号NO.	公司件号Part NO.	名称PartName	零件描述Description	数量 Number
1	112900100	切线刀组件	Knife unit	1
2	112S20001	螺钉销 D=4.6 H=7	Hinge screw D=4.6 H=7	1
3	11206001	活动刀曲柄	Forked base for knife	1
4	112S13001	动刀螺钉	Moving knife hinge screw	1
5	11219002	活动刀	Moving knife asm.	1
6	11201004	刀架	Knife mounting base	1
7	11212012	导线片	Thread guide for knife	1
8	112S11005	螺钉 SM3/32"×56 L=2.3	Screw SM3/32"×56 L=2.3	1
9	112S11006	螺钉 SM1/8"×44 L=6	Screw SM1/8"×44 L=6	2
10	11219003	固定刀	Counter knife	1
11	11230004	14孔接线器	Housing 14P	1
12	11230015	12孔接线器	Housing 12P	1
13	101S11011	螺钉 SM11/64"×40 L=7	Screw SM11/64"×40 L=7	1
14	1201005500	剪线下线挡线组件	Picking arm asm.	1
15	11201005	挡线器座	Picking arm	1
16	11212013	挡线	Thread take-up picker asm.	1
17	112S11007	螺钉 SM9/64"×40 L=5	Screw SM9/64"×40 L=5	2
18	112S20002	轴位螺钉 D=6.35 H=14.5	Hinge screw D=6.35 H=14.5	1
19	112S20003	轴位螺钉 D=6.35 H=14.5	Hinge screw D=6.35 H=2.7	1
20	11210001	剪线凸轮	Thread trimmer cam asm.	1
21	112S20004	螺钉 SM1/4"×40 L=6	Screw SM1/4"×40 L=6	2
22	11208001	挡圈	Cam collar asm.	1
23	112S15001	螺钉 SM11/64"×40 L=4.5	Screw SM11/64"×40 L=4.5	1
24	112120100	切线主动组件	Thread trimmer driving unit	1
25	11212015	剪线驱动座	Base plate asm	1
26	11212016	挡板	Picking arm stopper	1
27	112S30003	挡线器连杆连接螺钉	Thread trimmer rock arm shaft	1
28	B05003	开口挡圈	E-ring 6	1
29	112S11008	螺钉 SM11/64"×40 L=7	Screw SM11/64"×40 L=7	2
30	11227002	剪线离合复位弹簧	Clutch spring	1
31	11212017	剪线离合盘	Clutch plate asm.	1
32	11212018	挡线连杆	Picker link	1
33	W01003	挡圈	Washer	2
34	112S16004	螺母SM15/64"×28	Nut SM15/64"×28	2
35	B05009	开口挡圈	E-ring 6	1
36	11212019	切线连杆	Moving knife link	1
37	B05013	开口挡圈	E-ring	1
38	112S30004	切线轮连接螺钉	Moving knife link pin	1
39	11227003	切线复位弹簧	Knife return spring B	1
40	B05013	开口挡圈4	E-ring 4	2
41	11226002	跳板销	Roller fulcrum shaft	1
42	11227004	跳板簧	Roller fulcrum spring	1
43	112S11009	螺钉SM9/64"×40 L=6	Screw SM9/64"×40 L=6	1
44	11212020	托板支撑架	Roller arm bracket	1
45	11212021	离合跳板	Roller arm asm	1
46	112S20002	剪线驱动曲柄	Knife driving arm asm	1
47	11230005	电线插针	Pin contact	2
48	112S11026	螺钉 SM15/64"×28 L=9	Screw SM15/64"×28 L=9	2
49	11230006	电线插头	Connecting wire plug	1
50	11212022	剪线器连板	Clutuch link	1
51	B05013	开口挡圈	E-ring	1
52	11226004	电磁铁橡皮	Solenoid rubber A	1
53	11230006	电磁铁	Thread trimmer solenlod	1
54	11212023	支架	Solenlod base	1
55	W01013	垫圈 4.5×80×0.5	Washer 4.5×80×0.5	2
56	N01001	螺母M4	Nut M4	2
57	11222005	橡皮垫	Solenlod rubber	1
58	112S16005	螺母	Nut	1
59	112S16006	螺母 1/4"×40	Nut 1/4"×40	1
60	11226003	剪线器连板接头	Solenlod pin	1
61	112S11010	螺钉 SM11/64"×40 L=6.5	Screw SM11/64"×40 L=6.5	1
62	112S20005	连板螺钉 D=6 H=3.6	Hinge screw D=6 H=3.6	1
63	101S11026	螺钉 SM15/64"×28 L=9	Screw SM15/64"×28 L=9	2
64	11212043	电线压板	Tube holder,lower	1
65	11212025	底线接头	Ground wire asm	1



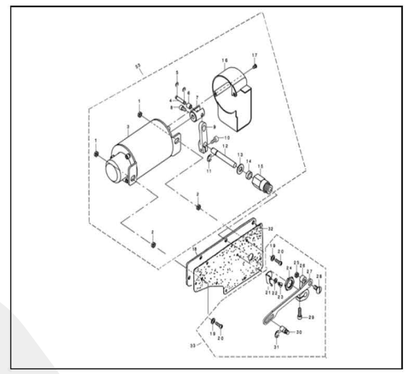
15.JK-5559WD切线装置部件（平刀）Thread trimmer components

序号NO.	公司件号 Part NO.	名称PartName	零件描述Description	数量 Number
1	1143300300	自动倒送料开关组件	Reverse feed switch asm.	1
2	H05007	开口挡圈3	E-ring 3	2
3	11311002	开关按钮	Button	1
4	S04021	螺钉M2×4	Screw M2×4	2
5	11327006	弹簧片	Spring	1
6	11327001	弹簧	Spring	1
7	101S11025	复位板螺钉 SM11/64"×40 L=7	Screw SM11/64"×40 L=7	1
8	11311001	开关罩壳	Reverse feed switch cover	1
9	11211005	扣龙礼带	Buckle	1
10	11430027	开关	Reverse feed cord asm.	1
11	S04022	螺钉M2×10	Screw M2×10	2
12	11430005	插针	Pin connect	1
13	11412036	倒链开关支座	Reverse feed switch base	1
14	11412037	倒链开关支架导向	Reverse feed switch base guide	1
15	101S11004	螺钉 SM3/16"×28 L=7	Screw SM3/16"×28 L=7	1
16	11212029	自动倒送料拉杆	Reverse feed connecting shaft	1
17	112S20001	曲柄长螺钉 SM1/4"×28 L=12.2	Screw SM1/4"×28 L=12.2	1
18	112S16007	曲柄长螺母 SM1/4"×28	Nut SM1/4"×28	1
19	112S16008	曲柄短螺母 SM11/64"×40	Nut SM11/64"×40	1
20	112S20002	曲柄短螺钉 SM11/64"×40 L=8	Screw SM11/64"×40 L=8	1
21	11204003	自动倒送料曲柄	Reverse feed connecting arm	1
22	11312009	自动倒送料连杆	Reverse feed connecting link	1
23	11227006	自动倒送料连杆顶簧	Plunger spring	1
24	H05014	开口挡圈	E-ring	1
25	W01014	垫圈16	Washer	1
26	11222006	橡皮垫圈	Rubber plunger	1
27	11430001	插针	Pin connect	2
28	1123000900	自动倒送料电磁铁组件	Reverse feed magnet asm.	1
29	11226005	连杆销	Plunger arm pin	1
30	116330003	螺钉 SM15/64"×28 L=14.5	Screw SM15/64"×28 L=14.5	2
31	H05003	GB/T896-1986挡圈5	Cam collar asm5.	1

16.JK-5559WD自动倒送料开关组件(杆式)

Automatic reverse feed components

序号NO.	公司件号 Part NO.	名称PartName	零件描述Description	数量 Number
1	11212030400	开关组件	Reverse feed switch asm.	1
2	11211002	开关罩壳	reverse feed switch cover	1
3	101S11008	螺钉M4 L=6	Screw M4 L=6	1
4	11212026	开关支承架	Reverse feed switch base	1
5	11226004	开关主动杆销	Reverse feed switch shaft	1
6	11227005	开关主动杆复位弹簧	Reverse feed switch spring	1
7	112S11011	螺钉M4 L=16	Screw M4 L=16	1
8	S04007	螺钉M3 L=15	Screw M3 L=15	2
9	11230008	电线	2-core cabtyre cord	1
10	11230005	电线插针	Pin contact	2
11	11230007	开关	Microswitch	1
12	11212027	开关压板	Switch holding plate	1
13	11212028	开关主动件	Reverse feed switch lever	1
14	101S11001	螺钉SM3/16"×28 L=9	Screw SM3/16"×28 L=9	2
15	116330003	螺钉	Screw	2
16	11212029	主动倒送料拉杆	Reverse feed connecting shaft	1
17	112S20001	曲柄长螺钉	Screw	1
18	112S16007	曲柄长螺母	Nut	1
19	112S16008	曲柄短螺母	Nut	1
20	112S20002	曲柄短螺钉	Screw	1
21	11204003	自动倒送料曲柄	Connecting arm asm.	1
22	11212030	自动倒送料连杆	Reverse feed connecting link	1
23	11227006	自动倒送料连杆顶簧	Plunger spring	1
24	H05014	开口挡圈	E-ring	1
25	W01014	垫圈16	Washer	1
26	11222006	橡皮垫圈	Rubber plunger	1
27	11430001	插针	Pin contact	2
28	1123000900	自动倒送料电磁铁组件	Reverse feed magnet asm.	1
29	11226005	连杆销	Plunger arm pin	1



17.JK-5559WD自动抬压脚组件Auto lifter components

序号 NO.	公司件号Part NO.	名称PartName	零件描述Description	数量 Number
1	112S16012	支承架小螺母 M6	Nut M6	2
2	112S16013	支承架大螺母 M6	Nut M6	2
3	11230013	自动抬压脚电磁铁组件	magnetic plug asm	1
4	11226007	电磁铁曲柄销	Magnetic plug pin	1
5	H05003	挡圈5	E-ring 5	2
6	11203003	曲柄套筒	Sleeve	1
7	11201003	电磁铁芯轴接头	Magnetic plug pin tie-in	1
8	S05038	接头螺钉	Screw	1
9	11204005	电磁铁曲柄	Magnetic crank	1
10	S05013	螺钉 M5 L=14	Screw M5 L=14	1
11	H05011	挡圈9	E-ring 9	1
12	11202003	自动抬压脚轴	Automated presser foot shaft	1
13	11228003	套筒垫片	Washer	1
14	11222016	油封	Oil seal	1
15	11203002	套筒	Sleeve	1
16	11211006	自动抬压脚罩壳	Wiper cover	1
17	S04022	罩壳螺钉	Screw	2
18	301701	压盖板	Side plate	1
19	11228001	支架支承螺钉垫片	Washer	1
20	112S11015	支架支承螺钉 M6 L=12	Screw M6 L=12	1
21	11212037	拉杆支架	Full rod bracket	1
22	11228002	拉杆支架垫片	Full rod bracket washer	1
23	112S11014	螺钉SM9/64"×40 L=5	Screw SM11/64"x40 L=5	1
24	112S16011	套筒螺母 M16x1.5	Nut M16x1.5	1
25	112S16012	拉杆螺母 M6	Nut M6	1
26	11204004	自动抬压脚曲柄	Crank	1
27	11412075	拉杆	Full rod	1
28	112S20008	拉杆螺钉 M6 L=15	Screw M6 L=15	1
29	S05004	螺钉 M5 L=14	Screw M5 L=14	1
30	112S20009	螺钉SM3/16"×32 L=4.5	Screw SM3/16" x32 L=4.5	1
31	H05013	挡圈6	E-ring 6	1
32	11422063	后盖板垫	Gasket	1
33	1123002000	自动抬压脚组件(无拉杆)	Autolifter components (no bars	1

18.十八、JK-5559WD专用部件 JK-5559WD Components

序号 NO.	公司件号 Part NO.	名称PartName	零件描述Description	数量 Number
1	301512	后盖板	Side plate	1
2	10122104	后盖板垫	Gasket	1
3	11412068	电线压板	Cord hold	1
4	10113004	右线钩	Arm thread guide A	2
5	12812028	挥布屑下料挡板	Blanking baffle	1
6	11412079	扳键	Push-button	1
7	1141300600	底线夹线器	Thread tension asm.	1
8	11411034	电机罩	Motor cover	1
9	300822	手轮	Hang wheel	1
10	S10009	GB/T80-1985螺钉 M6×8	Screw M6×8	6
11	11405015	倒送料连杆	Feed regulator connecting rod	1
12	11426021	倒送料连杆销	Feed regulator pin	1
13	11426019	送料调节螺柱	Feed regulator screw	1
14	11411035	送料距旋钮	Feed dial	1
15	114S30001	螺栓(内六角)	Bolt	4
16	301781	倒送料扳手	Reverse feed control lever	1
17	1141206000	松线顶板组件	Thread release wire asm	1
18	11426020	松线辅钉	Tension release supporting	1
19	11433013	电机	Motor	1
20	S10037	GB/T80-1985螺钉 M6×0.75×8	Screw M6×0.75×8	6
21	11403040	上轴连接器	Up shaft linker	1
22	B07042	GB/T279轴承6907Z	Bearing	1
23	11422028	上轴油封	Oil seal unit	1
24	12802012	上轴	Up shaft	1
25	11427035	针距按键簧	Push-button spring	1
26	1141300400	小夹线器组件	Small thread tension asm.	1
27	401S16001	螺母	Screw	1
28	11413011	固定式缓线钩	Pressser bar thread guide	1
29	1143002500	小马巢电磁铁组件	plug	1
30	S10008	螺钉	Screw	1

新杰克缝纫机股份有限公司

公司地址：台州市椒江区机场南路十五号
邮编：318000
国内销售部：
电话：0086-576-88177788 88177789
传真：0086-576-88177758
国贸部：
电话：0086-576-88177782 88177774
传真：0086-576-88177787
免费售后服务电话：600-8876858
http://www.chinajack.com

资料如有更改，恕不另行通知，以实物为准。 2013.09.03

jintex.in