JINTEX

Sewing Machine Spare Parts

Juki DDL-8700-7 (52 pages)

Sewing Machine Part Book

52 pages

jintex.in | enquiry@jintex.in | +91 96321 55211

33 Park Road, Akkipet Circle, Bangalore

MODEL　: DDL-8700-7
List No : 1307-09

PARTS LIST

Published:05/07/2018

jintex.in

CONTENTS

MACHINE FRAME & MISCELLANEOUS COVER COMPONENTS 1
MAIN SHAFT & THREAD TAKE-UP LEVER COMPONENTS 5
NEEDLE BAR, UPRIGHT SHAFT & HOOK DRIVING SHAFT COMPONENTS 9
HAND LIFTER COMPONENTS 11
FEED MECHANISM COMPONENTS 13
THREAD TRIMMER COMPONENTS 17
AUTOMATIC REVERSE FEED COMPONENTS 21
WIPER COMPONENTS 23
OIL LUBRICATION COMPONENTS 25
OIL RESERVOIR COMPONENTS 27
BELT COVER & BOBBIN COMPONENTS 29
THREAD STAND COMPONENTS 31
EXCLUSIVE PARTS FOR DDL-8700H-7 33
EXCLUSIVE PARTS FOR DDL-8700J-7 37
EXCLUSIVE PARTS FOR DDL-8700A-7 41
LIST FOR INFORMATION OF CHANGE (1) 43
LIST FOR INFORMATION OF CHANGE(2) 44
HOW TO MAKE USE OF THIS PARTS LIST 45

jintex.in

jintex.in

MACHINE FRAME & MISCELLANEOUS COVER COMPONENTS

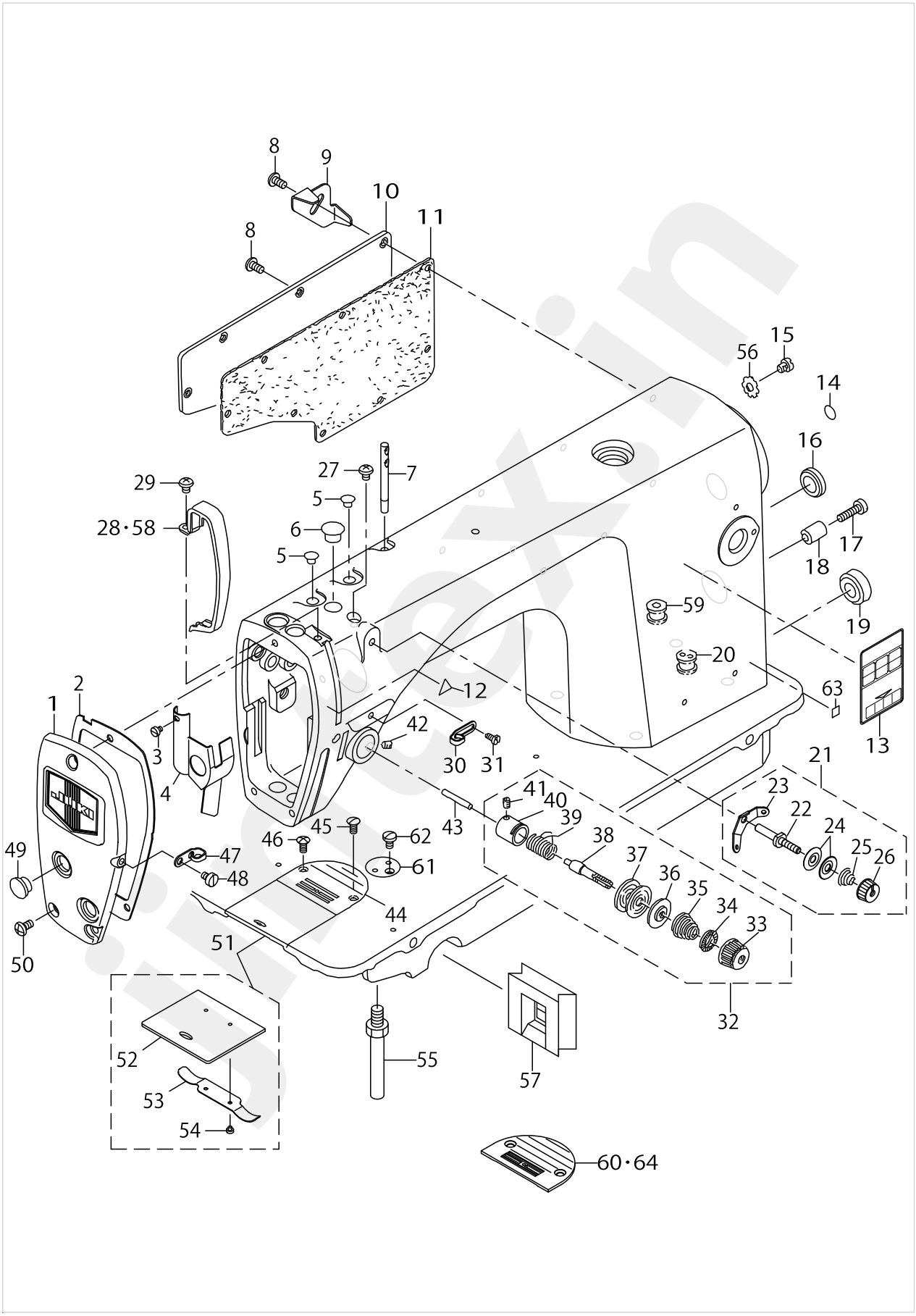

jintex.in

MACHINE FRAME & MISCELLANEOUS COVER COMPONENTS

No.	Parts No.	Parts name	Remarks	Level	Cons	Qty
1	40102097	FACE_PLATE_ASM.				1
2	40012126	FACE PLATE PACKING				1
3	SS6080410SP	SCREW 1/8-44 L=4				1
4	22900757	ARM OIL SHIFLD ASM.				1
5	TA0850604R0	RUBBER PLUG				2
6	TA1250705R0	RUBBER PLUG				1
7	22958300	THREAD GUIDE ROD				1
8	SS4120925SP	SCREW 3/16-28 L=9				8
9	22954705	CORD HOLDER	EXCEPT DDL-8700-7-00			1
10	22900401	SIDE PLATE				1
11	40012129	SIDE PLATE PACKING				1
12	CM300200001	ATTENTION SEAL				1
13	CM301200001	SAFETY LABEL_S				1
14	22901805	GROUND MARK				1
15	SS4120615SP	SCREW 3/16-28 L=6				1
16	TA2000502R0	RUBBER PLUG				1
17	SS6121840SP	SCREW 3/16-28 L=18	FOR DDL-8700-7-0B,-WB			1
18	22952501	REVERSE FEED LEVER STOPPER	FOR DDL-8700-7-0B,-WB			1
19	TA2101002R0	RUBBER PLUG				1
20	40111022	MAGNET CORD RUBBER	FOR DDL-8700-7-0B,-WB			1
21	22945463	THREAD TENSION ASM.				1
22	22945414	THREAD TENSION POST		*		1
23	22945604	THREAD TENSION GUIDE		*		1
24	22945802	BOBBIN WINDER TENSION DISC		*		2
25	22945505	THREAD TENSION SPRING		*		1
26	22945703	THREAD TENSION NUT		*		1
27	SS4120615SP	SCREW 3/16-28 L=6				1
28	22900609	THREAD TAKE-UP LEVER COVER				1
29	SS4120615SP	SCREW 3/16-28 L=6				1
30	22920508	ARM THREAD GUIDE A				1
31	22921001	SCREW				1
32	22945356	THREAD TENSION ASM.				1
33	22921308	TENSION NUT		*		1
34	22921407	ROTATING STOPPER		*		1
35	22921704	TENSION SPRING A		*		1
36	22921803	THREAD TENSION DISK PRESSER		*		1
37	22921506	THREAD TENSION DISK		*		2
38	22921209	TENSION POST		*		1
39	22921605	TAKE-UP SPRING		*		1
40	22945307	TENSION POST SOCKET		*		1
41	SS8090670SP	SCREW 9/64-40 L=5.5		*		1
42	SS8150710TP	SCREW 15/64-28 L=7				1
43	B3118552E00	TENSION RELEASING				1
44	B1109012I0B	THROAT PLATE (I)	FOR JE			1
45	SS2110920TP	SCREW 11/64-40 L=8.5				1
46	SS2110915SP	SCREW 11/64-40 L=8.5				1
47	22920607	ARM THREAD GUIDE B				1

jintex.in

MACHINE FRAME & MISCELLANEOUS COVER COMPONENTS

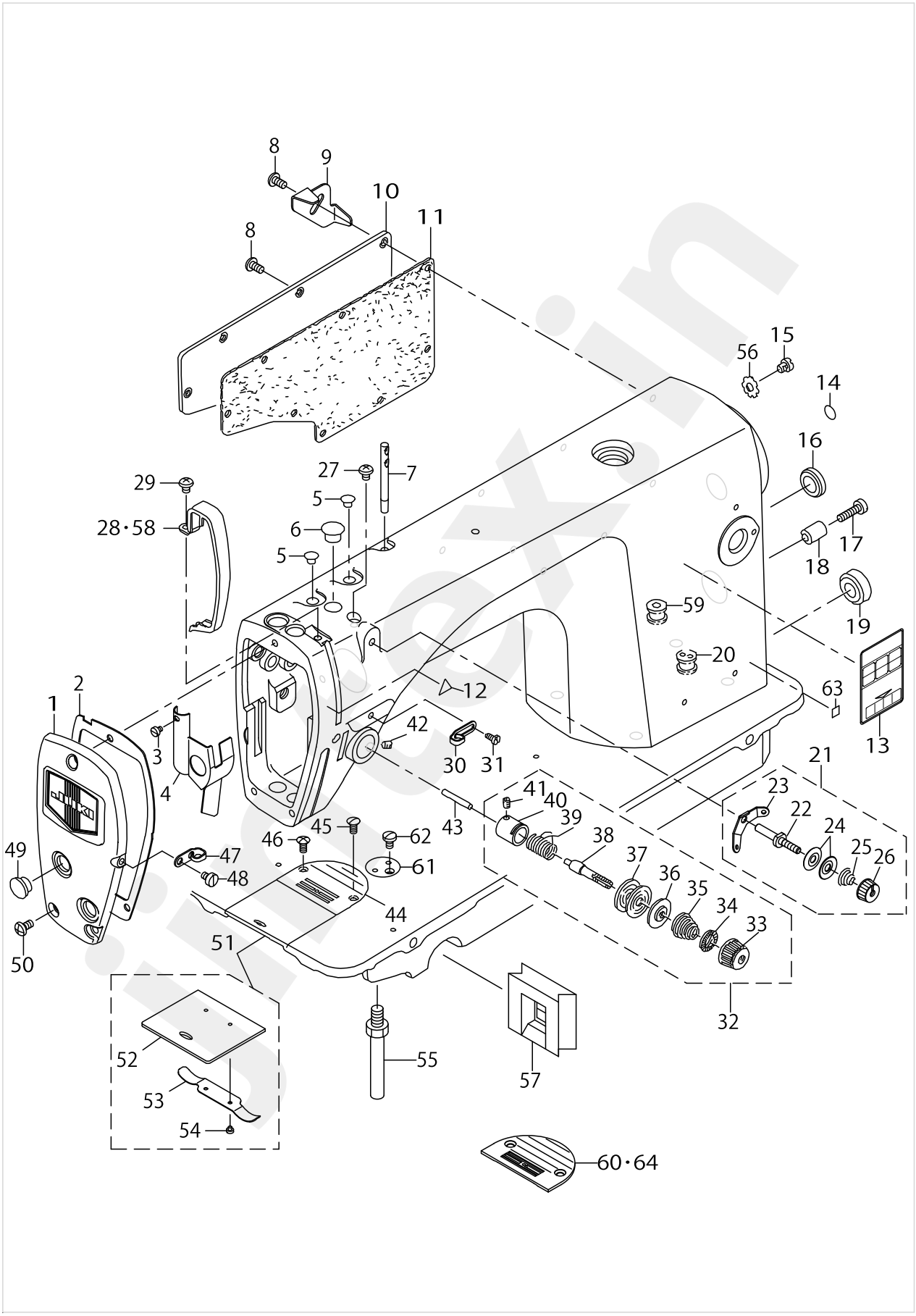

MACHINE FRAME & MISCELLANEOUS COVER COMPONENTS

No.	Parts No.	Parts name	Remarks	Level	Cons	Qty
48	SS6110610TP	SCREW 11/64-40 L=6				1
49	TA1250406R0	RUBBER PLUG D=12.5 L=4				2
50	SS4120925SP	SCREW 3/16-28 L=9				3
51	22901250	SLIDE PLATE ASM.				1
52	22901201	SLIDE PLATE		*		1
53	22901300	BED SLIDE SPRING		*		1
54	SS6060210SP	SCREW 3/32-56 L=1.9		*		2
55	22901003	BED SCREW STUD				4
56	WT0530002KS	TOOTHED WASHER D=5.3				1
57	22935407	RUBBER PLATE				1
58	11415205	THREAD TAKE-UP LEVER COVER(JE)	FOR JE			1
59	11030202	RUBBER BUSHING	FOR DDL-8700-7-00			1
60	B1109552000	THROAT PLATE	EXCEPT USE IN JAPAN,JE			1
61	40099083	RULER STOP SEAT				1
62	SS7110720SP	SCREW 11/64-40 L=7				1
63	40116677	GOST_SAFTY_LABEL_S	FOR JE			1
64	11028008	THROAT PLATE				1

jintex.in

jintex.in

MAIN SHAFT & THREAD TAKE-UP LEVER COMPONENTS

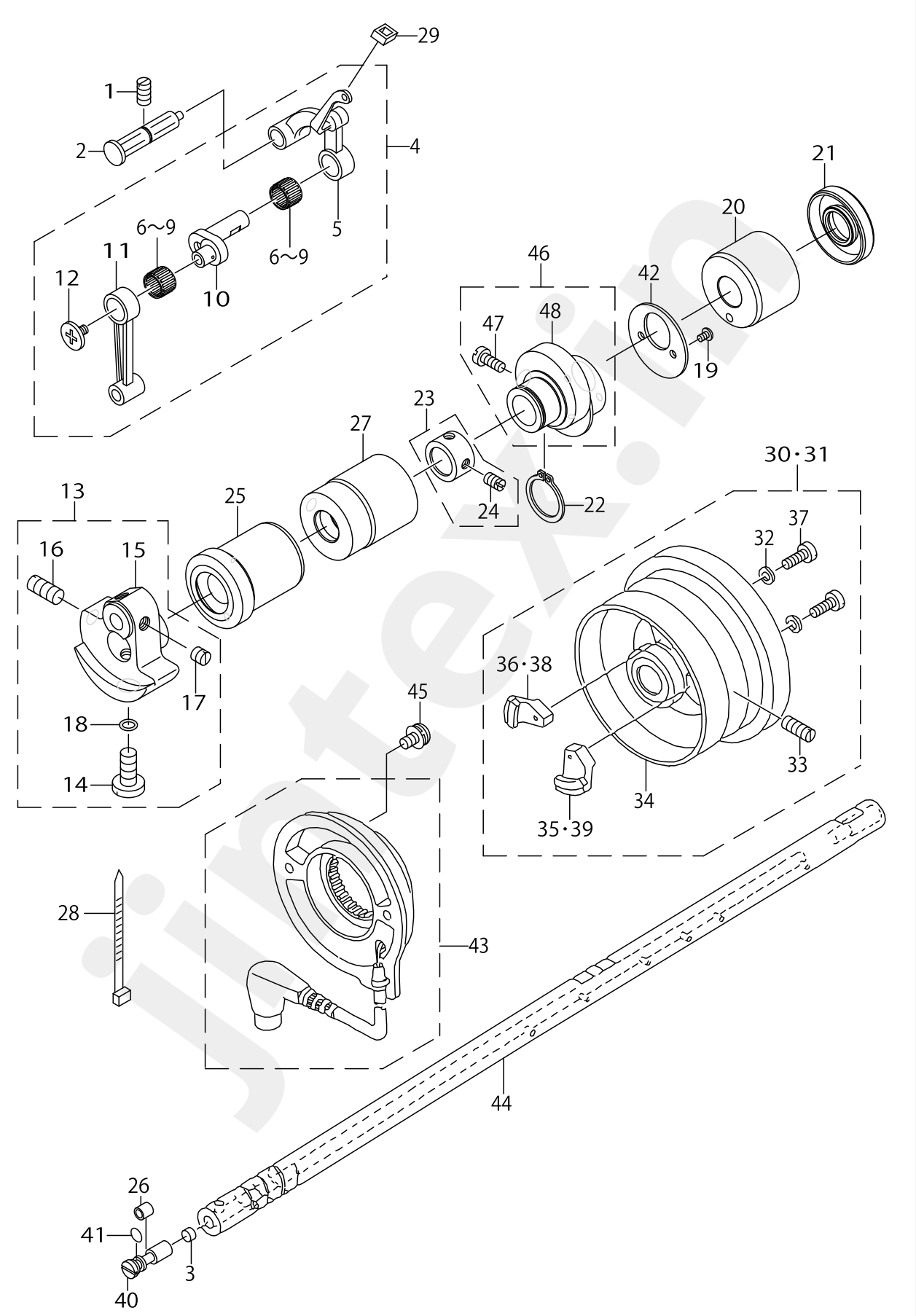

jintex.in

MAIN SHAFT & THREAD TAKE-UP LEVER COMPONENTS

No.	Parts No.	Parts name	Remarks	Level	Cons	Qty
1	SS8151150TP	SCREW 15/64-28 L=10.5				1
2	22919559	THREAD TAKE-UP CRANK SHAFT ASM.				1
3	11002904	ROLLER FELT				1
4	22918072	THREAD TAKE-UP LEVER COMPL.				1
5	22918064	THREAD TAKE-UP LEVER ASM.		*		1
6	22918403	NEEDLE BEARING A	SELECTIVE PARTS(A~D)	*		2
7	22918502	NEEDLE BEARING B	SELECTIVE PARTS(A~D)	*		2
8	22918601	NEEDLE BEARING C	SELECTIVE PARTS(A~D)	*		2
9	22918700	NEEDLE BEARING D	SELECTIVE PARTS(A~D)	*		2
10	22918106	NEEDLE BAR CRANK		*		1
11	22906606	NEEDLE BAR CRANK ROD		*		1
12	22918304	LEFT SCREW		*		1
13	40106606	COUNTER_WEIGHT_ASM.				1
14	SS7681650TP	SCREW 9/32-28 L=16		*		1
15	22903108	COUNTER WEIGHT		*		1
16	SS8681650TP	SCREW 9/32-28 L=16		*		1
17	SS8660610TP	SCREW 1/4-40 L=6		*		2
18	RO044240100	RUBBER RING		*		1
19	SS4090615SP	SCREW 9/64-40 L=6				2
20	11002409	MAIN SHAFT BUSHING REAR				1
21	40105231	OIL SEAL				1
22	RC1850001KP	SNAP RING 18.5				1
23	22904155	THRUST COLLAR ASM.				1
24	SS8660610TP	SCREW 1/4-40 L=6		*		2
25	22903207	MAIN SHAFT FRONT BUSHING				1
26	B1215552000	OIL ADJUSTING COLLAR				1
27	22903306	BUSHING INTERMEDIATE				1
28	EA9500B0100	CABLE BAND				1
29	22919203	RUBBER				1
30	22937064	HAND WHEEL COMPL.				1
31	40017623	HAND WHEEL ASM.	FOR SH			1
32	WP0450801SD	WASHER 4.5X10X0.8		*		2
33	SS8151550SP	SCREW 15/64-28 L=15		*		2
34	22937056	HAND WHEEL ASM.		*		1
35	22937155	MAGNET FITTING BASE A ASM.		*		1
36	22937254	MAGNET FITTING BASE B ASM.		*		1
37	SS6111210SP	SCREW 11/64-40 L=12		*		2
38	40017625	MAGNET FITTING BASE B ASM.	FOR SH	*		1
39	40017624	MAGNET FITTING BASE A ASM.	FOR SH	*		1
40	22903900	OIL AMOUNT ADJUSTING PIN				1
41	RO029180100	RUBBER RING				1
42	22910103	THRUST COLLAR				1
43	22937965	DYNAMO STATOR				1
44	22903009	MAIN SHAFT				1
45	SL4051001MZ	SCREW M5 L=9.6				2
46	22910053	FEED DRIVE ECCENTRIC CAM ASM.				1
47	SS6661110SP	SCREW 1/4-40 L=11		*		2

jintex.in

MAIN SHAFT & THREAD TAKE-UP LEVER COMPONENTS

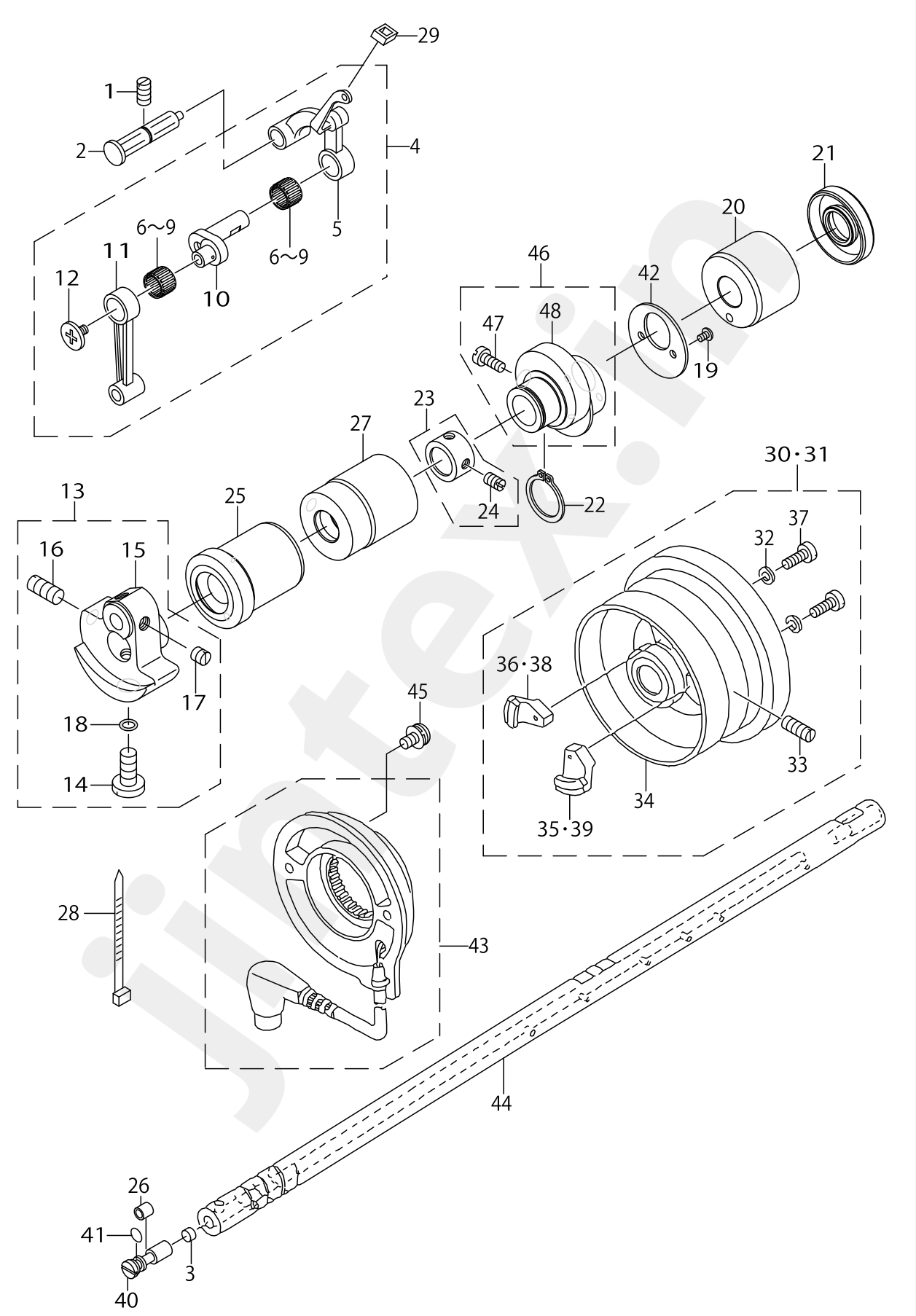

MAIN SHAFT & THREAD TAKE-UP LEVER COMPONENTS

No.	Parts No.	Parts name	Remarks	Level	Cons	Qty
48	22910004	FEED DRIVE ECCENTRIC CAM		*		1

jintex.in

jintex.in

NEEDLE BAR, UPRIGHT SHAFT & HOOK DRIVING SHAFT COMPONENTS

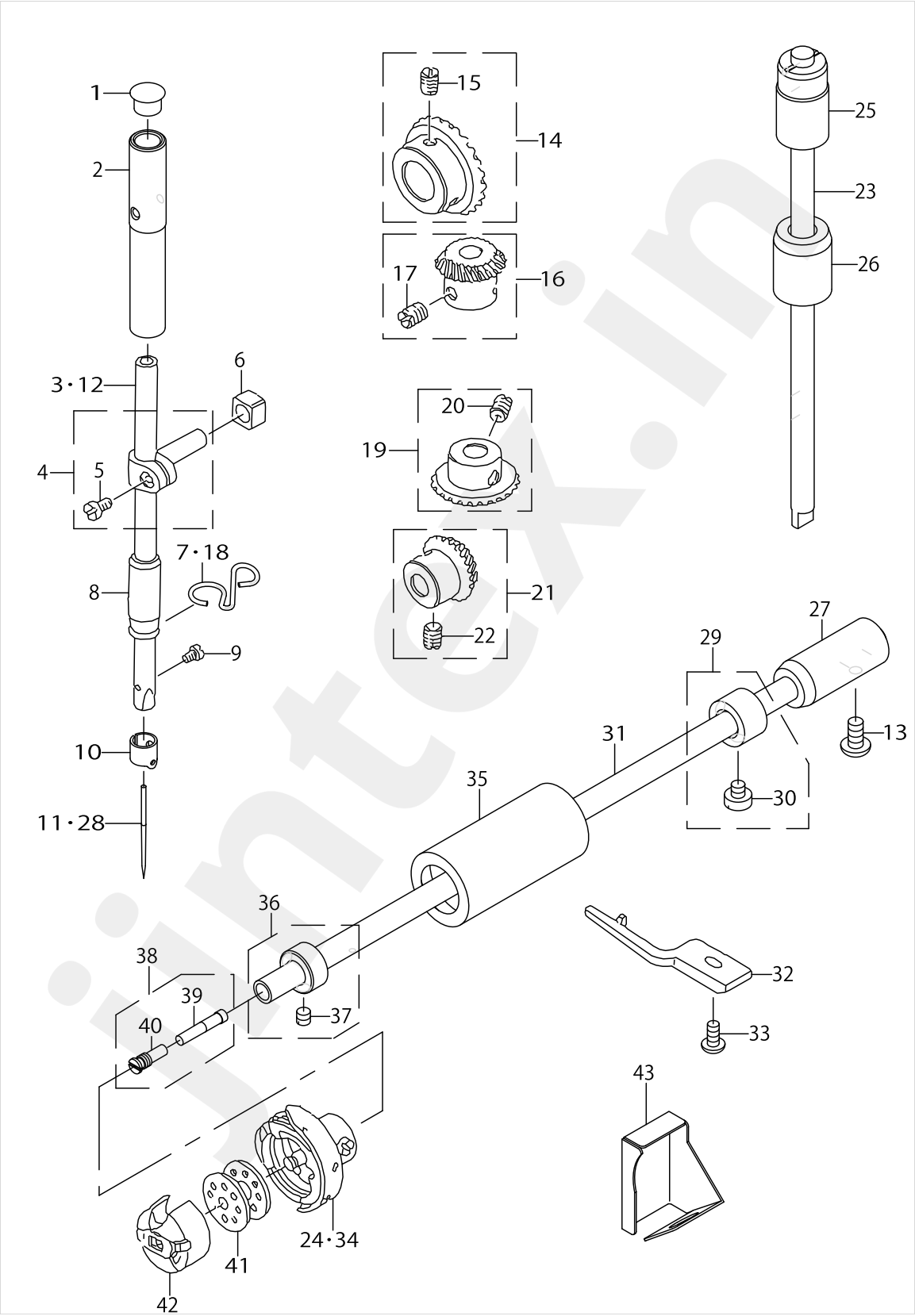

NEEDLE BAR, UPRIGHT SHAFT & HOOK DRIVING SHAFT COMPONENTS

No.	Parts No.	Parts name	Remarks	Level	Cons	Qty
1	TA0850604R0	RUBBER PLUG				1
2	22906101	NEEDLE BAR BUSHING UPPER				1
3	22939508	NEEDLE BAR				1
4	22906457	NEEDLE ROD HOLDER ASM.				1
5	SS6090670TP	SCREW 9/64-40 L=6		*		1
6	40090058	SLIDE BLOCK				1
7	40012444	NEEDLE BAR THREAD GUIDE				1
8	22906200	NEEDLE BAR BUSHING LOWER				1
9	SS7080510TP	SCREW 1/8-44 L=4.5				1
10	22906309	NEEDLE BAR THREAD GUIDE				1
11	MDB100B1400	NEEDLE DBX1 #14				1
12	22939607	NEEDLE BAR B	FOR JE			1
13	SS4120925SP	SCREW 3/16-28 L=9				1
14	40090002	UPPER LARGE BEVEL GEAR ASM.				1
15	SS8660810TP	SCREW 1/4-40 L=8		*		2
16	40090003	UPPER SMALL BEVEL GEAR ASM.				1
17	SS8660810TP	SCREW 1/4-40 L=8		*		2
18	40012444	NEEDLE BAR THREAD GUIDE	FOR SH			1
19	40090004	LOWER LARGE BEVEL GEAR ASM.				1
20	SS8660810TP	SCREW 1/4-40 L=8		*		2
21	40090005	LOWER SMALL BEVEL GEAR ASM.				1
22	SS8660810TP	SCREW 1/4-40 L=8		*		2
23	22905004	UPRIGHT SHAFT				1
24	11141355	HOOK ASM.	FOR JE			1
25	22905103	UPRIGHT SHAFT BUSHING LOWER				1
26	22905202	UPRIGHT SHAFT BUSHING LOWER				1
27	22916308	BUSHING REAR				1
28	MC200500900	NEEDLE 134 90	FOR JE			1
29	22917157	THRUST COLLAR ASM.				1
30	SS6110420TP	SCREW 11/64-40 L=4.8		*		2
31	22916001	LOWER SHAFT				1
32	22942502	BOBBIN CASE HOLDER				1
33	SS4110915TP	SCREW 11/64-40 L=9				1
34	11038650	HOOK ASM.	EXCEPT JE			1
35	22916100	LOWER SHAFT FRONT METAL				1
36	40101694	THRUST_COLLAR_ASM_FRONT				1
37	SS8110410TP	SCREW 11/64-40 L=3.5		*		2
38	22916555	OIL SEAL SCREW ASM.				1
39	11015906	OIL WICK		*		1
40	22916506	OIL SEAL SCREW		*		1
41	22932909	BOBBIN				1
42	11038759	BOBBIN CASE ASM.				1
43	22942601	OIL SHIELD				1

jintex.in

HAND LIFTER COMPONENTS

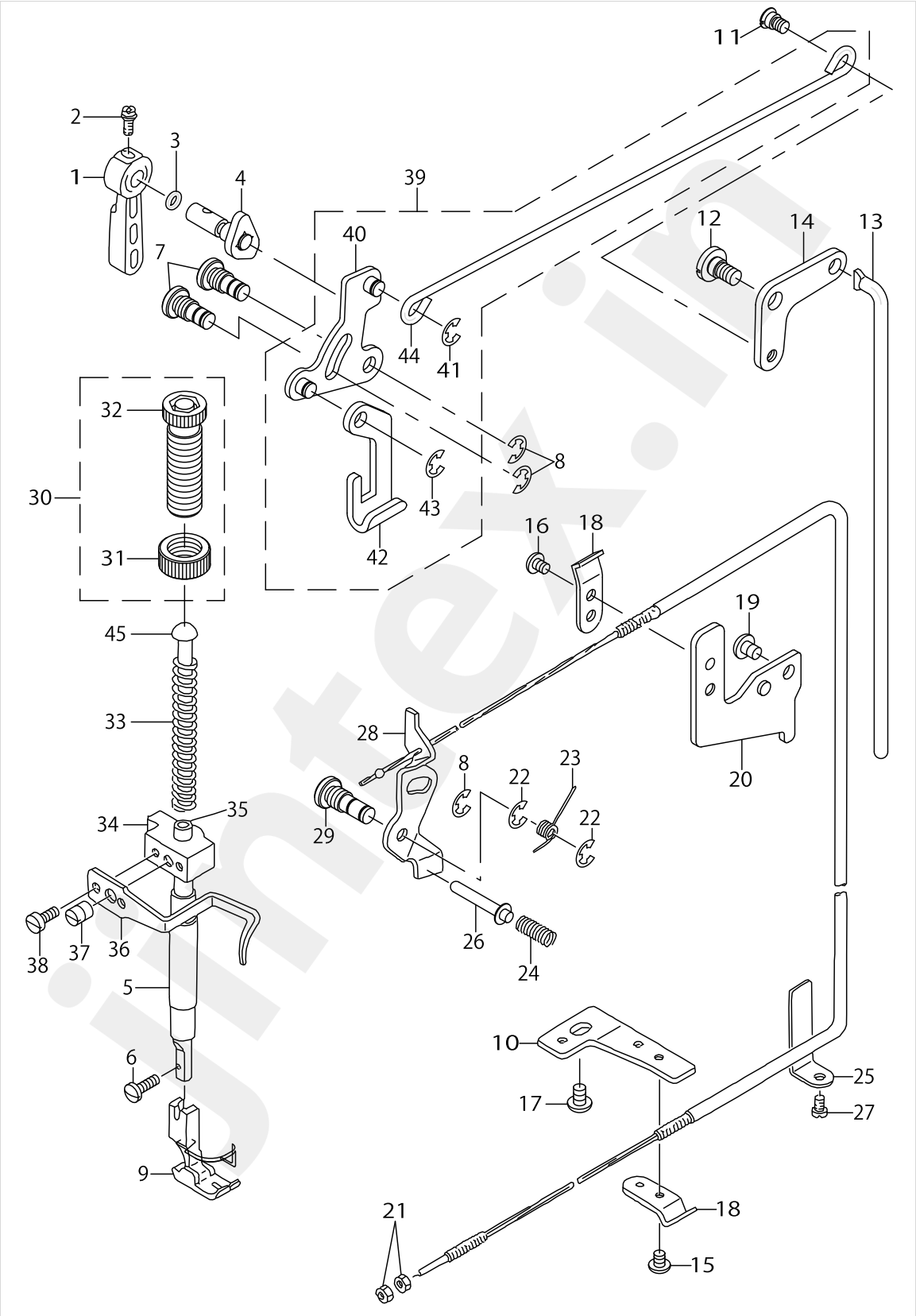

HAND LIFTER COMPONENTS

No.	Parts No.	Parts name	Remarks	Level	Cons	Qty
1	22907802	HAND LIFTER				1
2	B1521555000	SCREW				1
3	RO037180100	RUBBER RING				1
4	22908552	HAND LIFTER CAM ASM.				1
5	40060989	PRESSER BAR BUSHING LOWER				1
6	SS7091110TP	SCREW 9/64-40 L=10.5				1
7	22908701	LINK SHAFT				2
8	RE0500000K0	E-RING				3
9	B15240120BA	PRESSER FOOT ASM.				1
10	22944706	WIRE HOLDER BRACKET LOWER				1
11	22908909	HINGE SCREW				1
12	SD0720331SP	HINGE SCREW D=7.24 H=3.3				1
13	22909006	KNEE LIFTER CONNECTING ROD				1
14	22908800	LIFTING LEVER LINK				1
15	SS4110515SP	SCREW 11/64-40 L=5				1
16	SS4110515SP	SCREW 11/64-40 L=5				1
17	SS4150915SP	SCREW 15/64-28 L=9	FOR DDL-8700-7-00			1
18	22944508	WIRE HOLDER A				2
19	SS4120615SP	SCREW 3/16-28 L=6				1
20	22944607	WIRE HOLDER BRACKET UPPER				1
21	NS6620310SP	NUT 3/16-32				2
22	RE0500000K0	E-RING				2
23	22920201	TENSION RELEASE RETURN SPRING				1
24	22920409	THREAD RELEASE PIN SPRING				1
25	22945109	WIRE CABLE HOLDER				1
26	22920300	TENSION RELEASE SUPPORTING PIN				1
27	SS4120615SP	SCREW 3/16-28 L=6				1
28	22944854	THREAD RELEASE WIRE ASM.				1
29	22920102	TENSION RELEASE SHAFT				1
30	22907554	PRESSER SPRING REG NUT ASM.				1
31	22907604	PRESSER ADJUSTING SCREW NUT		*		1
32	22907505	PRESSER SPRING REGULATOR		*		1
33	22907406	PRESSER ADJUSTING SPRING				1
34	22907208	PRESSER BAR GUIDE BRACKET				1
35	40017805	PRESSER BAR				1
36	22907307	PRESSER BAR THREAD GUIDE				1
37	SS8660810TP	SCREW 1/4-40 L=8				1
38	SS6090910SP	SCREW 9/64-40 L=9				2
39	22908354	KNEE LIFTING CROSS ROD ASM.				1
40	22908156	HAND LIFTER LINK		*		1
41	RE0500000K0	E-RING		*		1
42	22908008	LIFTING LEVER		*		1
43	RE0500000K0	E-RING		*		1
44	22908305	KNEE LIFTING CROSS ROD		*		1
45	22907703	PRESSER GUIDE BAR				1

jintex.in

FEED MECHANISM COMPONENTS

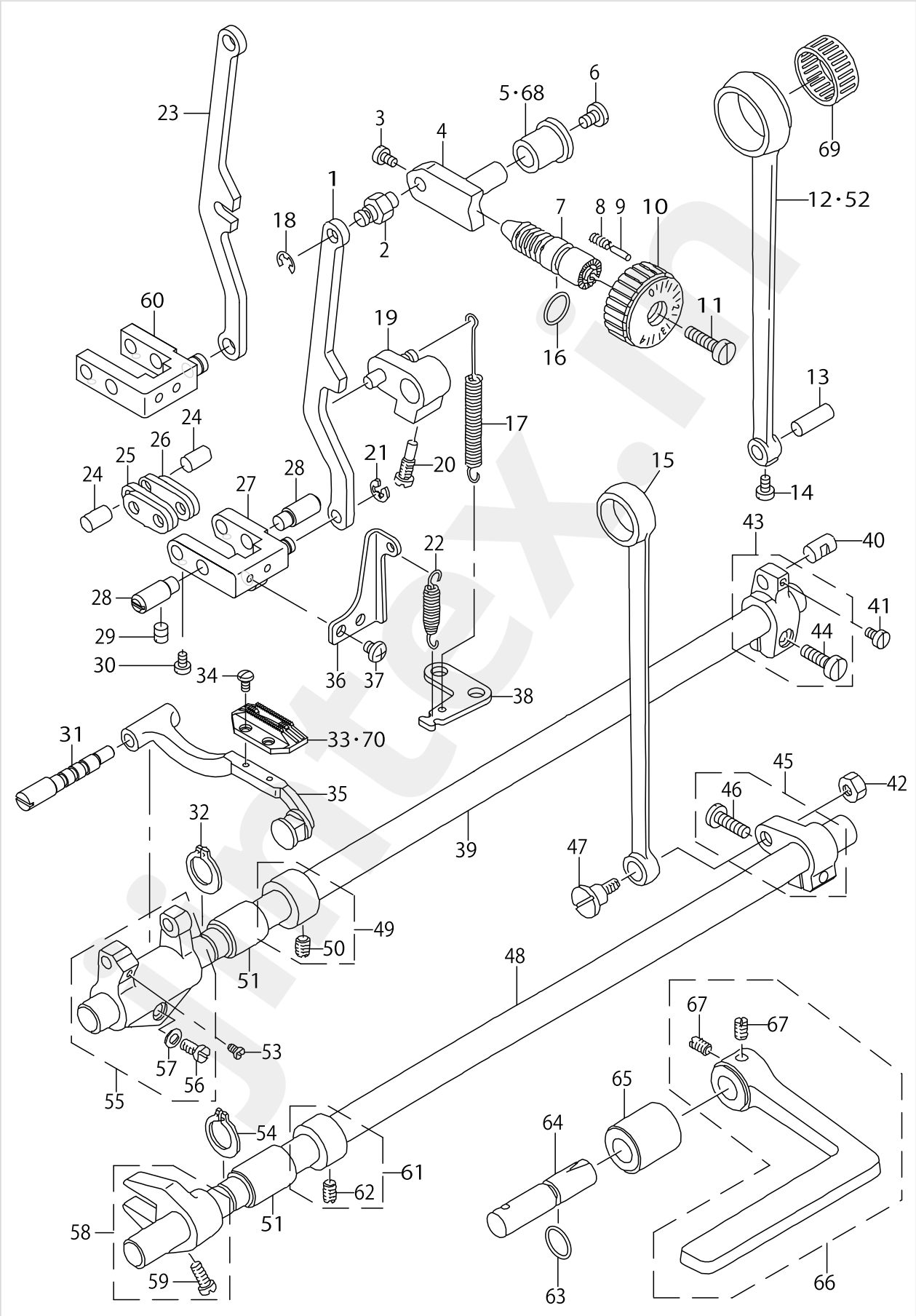

FEED MECHANISM COMPONENTS

No.	Parts No.	Parts name	Remarks	Level	Cons	Qty
1	22941108	FEED ADJUST ROD	FOR DDL-8700-7-0B,-WB			1
2	22911507	FEED REGULATOR PIN				1
3	SS6090670TP	SCREW 9/64-40 L=6				2
4	22911606	FEED REGULATOR				1
5	22911705	FEED REGULATOR BUSHING	FOR DDL-8700-7-00			1
6	SS7120770SH	SCREW 3/16-28 L=7				1
7	22911804	FEED REGULATOR SCREW				1
8	22912109	SPRING				1
9	22912000	FEED ADJUST PIN				1
10	22940506	FEED DIAL				1
11	SS6121860SP	SCREW 3/16-28 L=18				1
12	22910202	ROCKER SHAFT CONNECTING ROD				1
13	22911101	WALKING FOOT PIN C				1
14	SS6090620TP	SCREW				1
15	22915003	CONNECTING ROD				1
16	RO092270200	RUBBER RING				1
17	11010311	FEED REVERSE SPRING				1
18	RE0500000K0	E-RING				1
19	22912257	FEED REVERSE ARM ASM.				1
20	22912505	SCREW				1
21	RE0500000K0	E-RING				1
22	11037405	SPRING				1
23	22911408	FEED REGULATOR CONNCTING ROD	FOR DDL-8700-7-00			1
24	22910905	WALKING FOOT PIN A				2
25	40089548	CONNECTING LINK B				2
26	40093417	CONNECTING LINK A				2
27	22940951	FEED ADJUST LINK ASM.	FOR DDL-8700-7-0B,-WB			1
28	22910806	ADJUSTING LINK FULCRUM SHAFT A				2
29	SS8150710TP	SCREW 15/64-28 L=7				2
30	SS6090620TP	SCREW				2
31	40101462	FEED BASE SHAFT				1
32	RC0150001KP	RETAINING RING 13.8				1
33	B1613012I00	FEED DOG I	EXCEPT USE IN JAPAN			1
34	SS4080620TP	SCREW 1/8-44 L=6				2
35	22940753	FEED BAR ASM.				1
36	22941306	ADJUSTING LINK SPRING GUIDE				1
37	SS4110515SP	SCREW 11/64-40 L=5				2
38	22913701	FEED SPRING HOOK				1
39	22912901	FEED ROCKER SHAFT				1
40	22911002	WALKING FOOT PIN B				1
41	SS6090620TP	SCREW				1
42	NS6680410SP	NUT 9/32-28				1
43	40110379	ASSY_FEED_ROCKER_ARM				1
44	SS6121610SP	SCREW 3/16-28 L=15.5		*		1
45	40109422	FEED_ARM_ASM				1
46	SS7121610SP	SCREW 3/16-28 L=15.5		*		1
47	SD1000801SH	HINGE SCREW D=10 H=8				1

jintex.in

FEED MECHANISM COMPONENTS

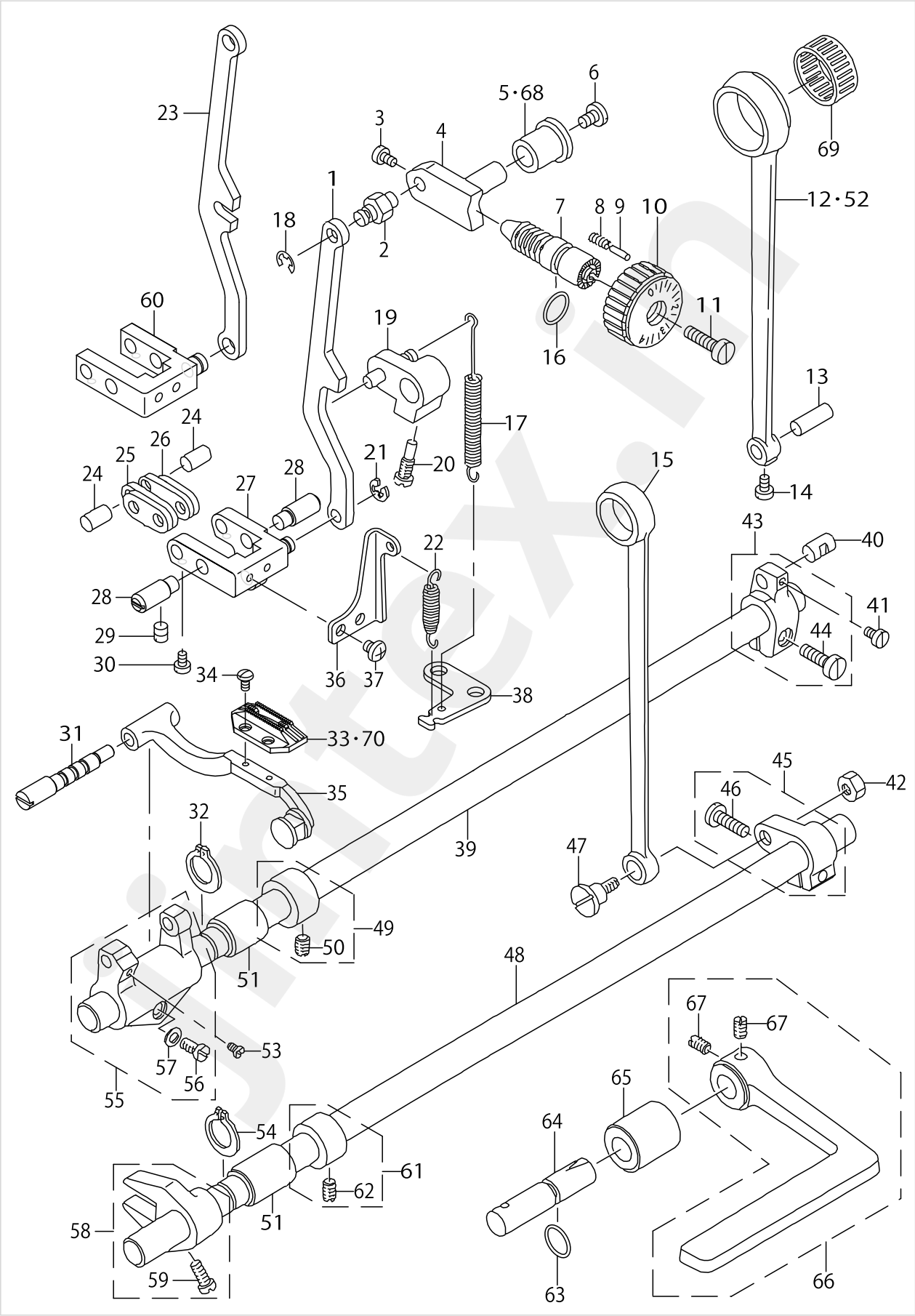

FEED MECHANISM COMPONENTS

No.	Parts No.	Parts name	Remarks	Level	Cons	Qty
48	22915201	FEED DRIVING SHAFT				1
49	22904155	THRUST COLLAR ASM.				1
50	SS8660610TP	SCREW 1/4-40 L=6		*		2
51	22913008	FEED ROCKER SHAFT BUSHING				2
52	22913800	HORIZONTAL FEED ROD B	FOR JE,JA			1
53	SS7110740TP	SCREW 11/64-40 L=7				1
54	RC0150001KP	RETAINING RING 13.8				1
55	22940654	FEED BAR CRANK ASM.				1
56	SS7121410TP	SCREW 3/16-28 L=14		*		1
57	WP0480856SP	WASHER 4.8X8.4X0.8		*		1
58	22915359	DRIVING SHAFT CRANK ASM.				1
59	SS7111120SP	SCREW 11/64-40 L=10.5		*		1
60	22910459	WALKING FOOT ADJUSTING LINK	FOR DDL-8700-7-00			1
61	22904155	THRUST COLLAR ASM.				1
62	SS8660610TP	SCREW 1/4-40 L=6		*		2
63	RO078190100	RUBBER RING				1
64	40100812	FEED LEVER SHAFT				1
65	22912802	FEED LEVER METAL				1
66	40102264	FEED_REVER_ASM.				1
67	SM8061010TP	SCREW		*		2
68	11009800	FEED REGULATOR BUSHING	FOR DDL-8700-7-0B,-WB			1
69	22914105	BEARING C	SELECTIVE PARTS(FOR JE,JA)			1
70	B1613012A00	FEED DOG A	FOR USE IN JAPAN			1

jintex.in

THREAD TRIMMER COMPONENTS

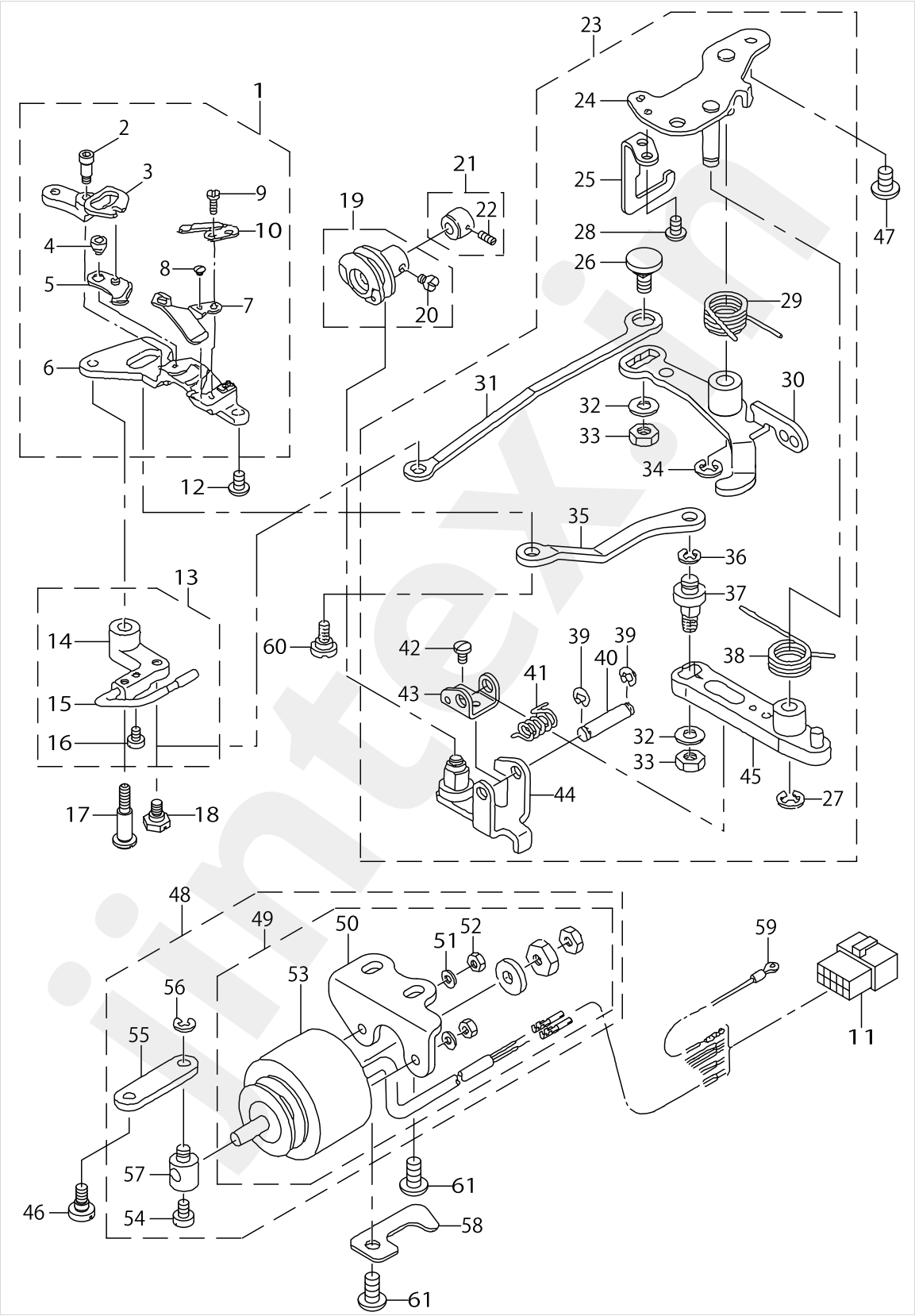

jintex.in

jintex.in

THREAD TRIMMER COMPONENTS

No.	Parts No.	Parts name	Remarks	Level	Cons	Qty
1	11040359	KNIFE UNIT				1
2	SD0460703TP	HINGE SCREW D=4.6 H=7		*		1
3	11040508	FORKED BASE FOR KNIFE		*		1
4	11040409	MOVING KNIFE HINGE SCREW		*		1
5	11040052	MOVING KNIFE ASM.		*		1
6	11040300	KNIFE MOUNTING BASE		*		1
7	11313103	THREAD GUIDE FOR KNIFE		*		1
8	SS2060210SP	SCREW 3/32-56 L=2.3		*		1
9	SS4080620TP	SCREW 1/8-44 L=6		*		2
10	D2406555D0H	COUNTER KNIFE		*		1
11	HK034610140	HOUSING 14P				1
12	SS4110715SP	SCREW 11/64-40 L=7				1
13	22950257	PICKER ARM ASM.				1
14	22950208	PICKER ARM		*		1
15	22950356	THREAD TAKE-UP PICKER ASM.		*		1
16	SS6090510TP	SCREW 9/64-40 L=5.0		*		2
17	SD0641451SP	HINGE SCREW D=6.35 H=14.5				1
18	SD0630275SP	HINGE SCREW D=6.35 H=2.7				1
19	22950851	THREAD TRIMMER CAM ASM.				1
20	SS6660610TP	SCREW 1/4-40 L=6		*		2
21	22950950	CAM COLLAR ASM.				1
22	SS8110520TP	SCREW 11/64-40 L=4.5		*		1
23	22949762	THREAD TRIMMER DRIVING UNIT				1
24	22949754	BASE PLATE ASM.		*		1
25	22950703	DRIVING ARM STOPPE		*		1
26	22950000	PICKER LINK PIN		*		1
27	RE0600000K0	E-RING 6		*		1
28	SS4110715SP	SCREW 11/64-40 L=7		*		2
29	22949408	CLUTCH SPRING		*		1
30	40087245	CLUTCH PLATE ASM.		*		1
31	22950109	PICKER LINK		*		1
32	WP0621016SH	WASHER		*		2
33	NS6150430SP	NUT 15/64-28		*		2
34	RE0600000K0	E-RING 6		*		1
35	22948301	MOVING KNIFE LINK		*		1
36	RE0500000K0	E-RING		*		1
37	22948400	MOVING KNIFE LINK PIN		*		1
38	22949309	KNIFE RETURN SPRING B		*		1
39	RE0400000K0	E-RING 4		*		2
40	22949101	ROLLER FULCRUM SHAFT		*		1
41	22949200	ROLLER FULCRUM SPRING		*		1
42	SS7090610SP	SCREW 9/64-40 L=6		*		1
43	22949002	ROLLER ARM BRACKET		*		1
44	11040953	ROLLER ARM ASM.		*		1
45	11040854	KNIFE DRIVING ARM ASM.		*		1
46	SD0600361SP	HINGE SCREW D=6 H=3.6				1
47	SS4150915SP	SCREW 15/64-28 L=9				2

jintex.in

THREAD TRIMMER COMPONENTS

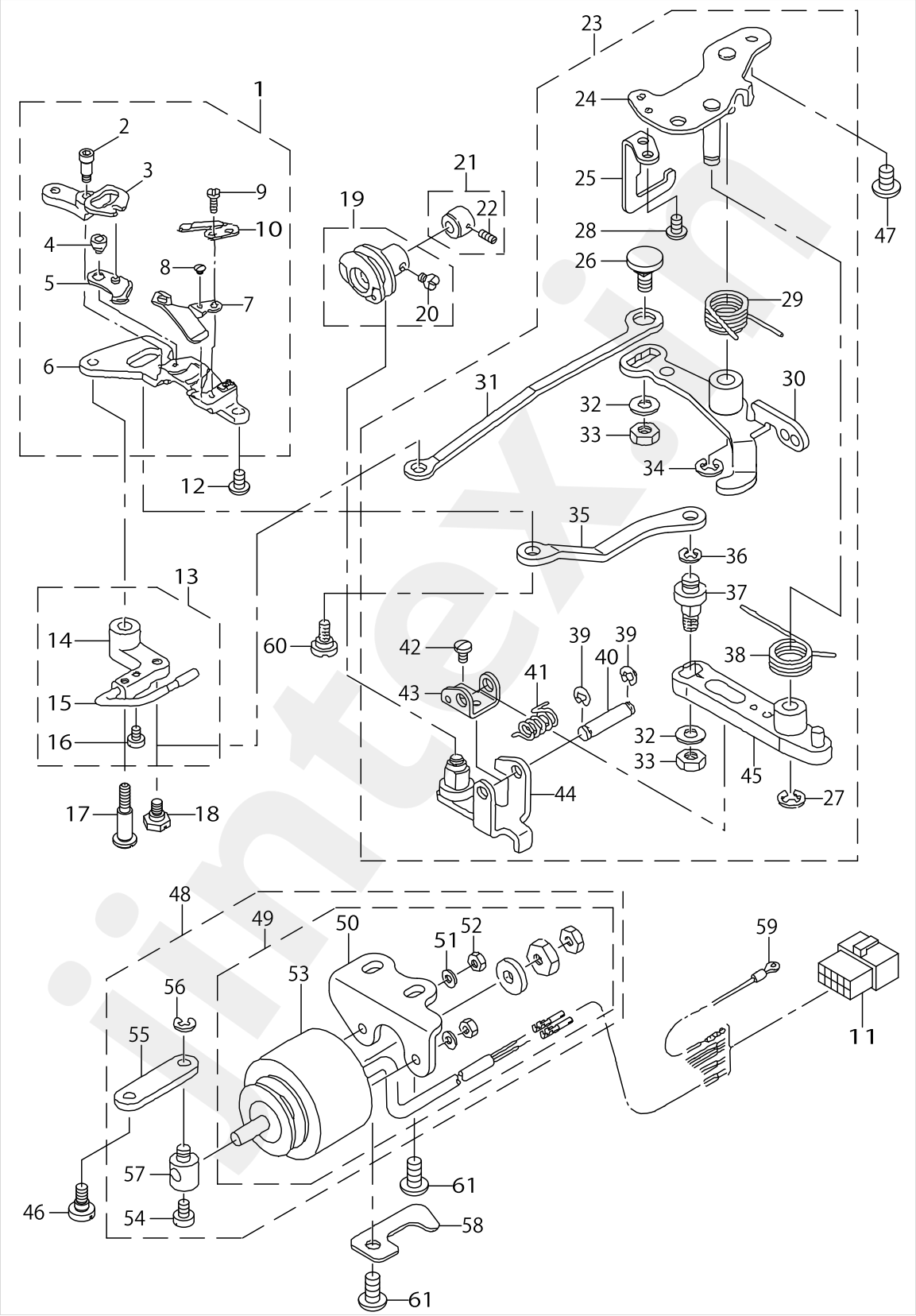

jintex.in

jintex.in

THREAD TRIMMER COMPONENTS

No.	Parts No.	Parts name	Remarks	Level	Cons	Qty
48	22951164	SOLENOID UNIT				1
49	40106930	THREAD TRIMMER SOLENOID ASM.		*		1
50	22951404	SOLENOID BASE		*		1
51	WS0410002KR	SPRING WASHER M4		*		2
52	NM6040001SE	NUT M4		*		2
53	40106931	THREAD TRIMMER SOLENOID		*		1
54	SS6110710TP	SCREW 11/64-40 L=6.5		*		1
55	22949903	CLUTCH LINK		*		1
56	RE0500000K0	E-RING		*		1
57	22951008	SOLENOID PIN		*		1
58	22924807	TUBE HOLDER LOWER				1
59	22951552	GROUND WIRE ASM.				1
60	SD0640631TP	HINGE SCREW D=6.35 H=6.3				1
61	SS4151215SP	SCREW 15/64-28 L=12				2

jintex.in

jintex.in

AUTOMATIC REVERSE FEED COMPONENTS

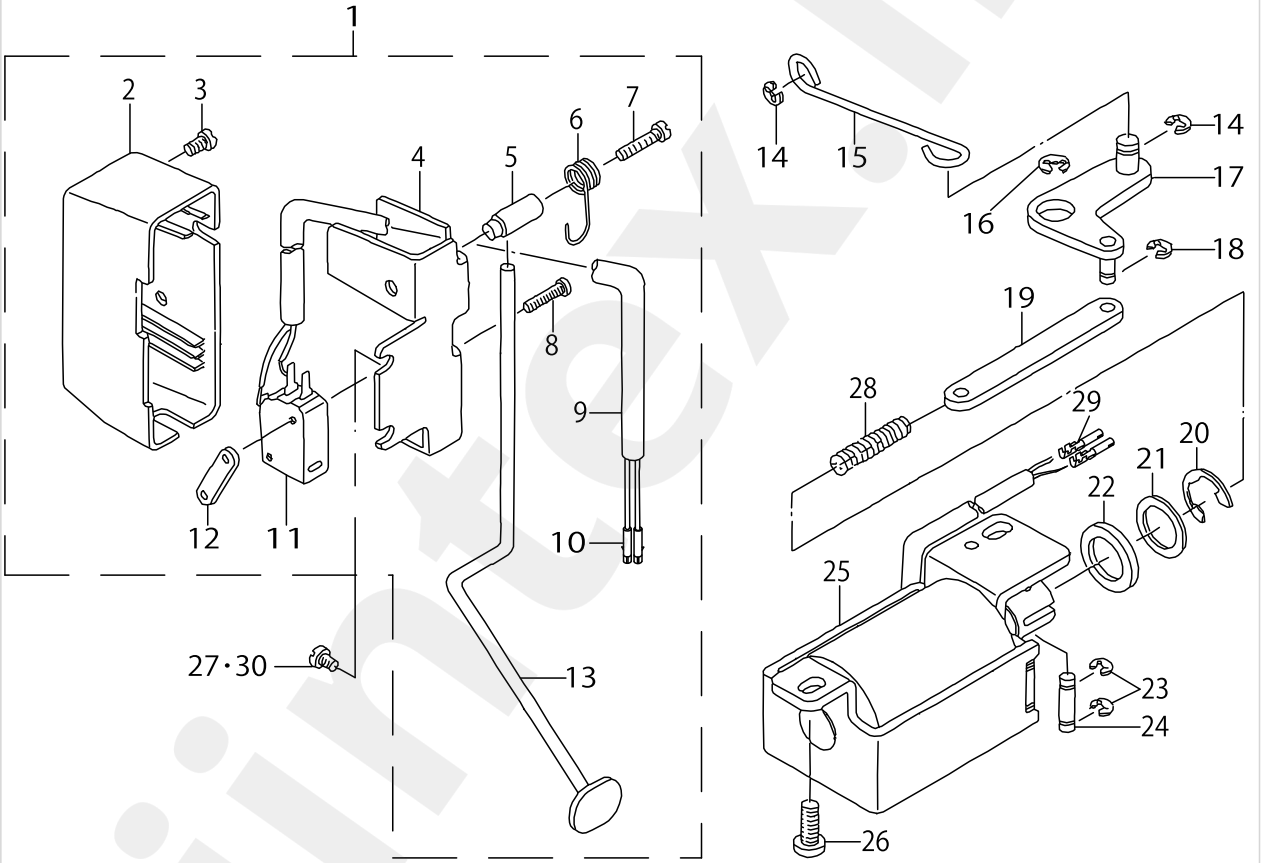

jintex.in

jintex.in

AUTOMATIC REVERSE FEED COMPONENTS

No.	Parts No.	Parts name	Remarks	Level	Cons	Qty
1	22954150	REVERSE FEED SWITCH ASM.				1
2	22954606	REVERSE FEED SWITCH COVER		*		1
3	SM4040655SP	SCREW M4 L=6		*		1
4	22954101	REVERSE FEED SWITCH BASE		*		1
5	22954200	REVERSE FEED SWITCH SHAFT		*		1
6	22954309	REVERSE FEED SWITCH SPRING		*		1
7	SM4041655SP	SCREW M4 L=16		*		1
8	SM4031501SC	SCREW M3 L=15		*		2
9	HW500070000	2-CORE CABTYRE CORD		*		1.31
10	HK03464000B	PIN CONTACT		*		2
11	HA001900000	MICROSWITCH		*		1
12	22954408	SWITCH HOLDING PLATE		*		1
13	22954507	REVERSE FEED SWITCH LEVER		*		1
14	RE0500000KP	E-RING 5				2
15	22953806	REVERSE FEED CONNECTING SHAFT				1
16	RE0900000K0	E-RING 9				1
17	22953657	CONNECTING ARM ASM.				1
18	RE0400000KP	E-RING 4				1
19	22953905	REVERSE FEED CONNECTING LINK				1
20	RE1200000K0	E-RING 12				1
21	WP1602616SZ	WASHER 16X24X2.6				1
22	D2468555B00	RUBBER PLUNGER				1
23	RE0400000K0	E-RING 4				2
24	22953509	PLUNGER ARM PIN				1
25	40085585	REVERSE FEED SOLENOID ASM.				1
26	SS4151215SP	SCREW 15/64-28 L=12				2
27	SS4120915SP	SCREW 3/16-28 L=9				1
28	22954002	PLUNGER SPRING				1
29	HK03464000B	PIN CONTACT				2
30	SS4120615SP	SCREW 3/16-28 L=6	FOR DDL-8700-7-0B			1

jintex.in

WIPER COMPONENTS

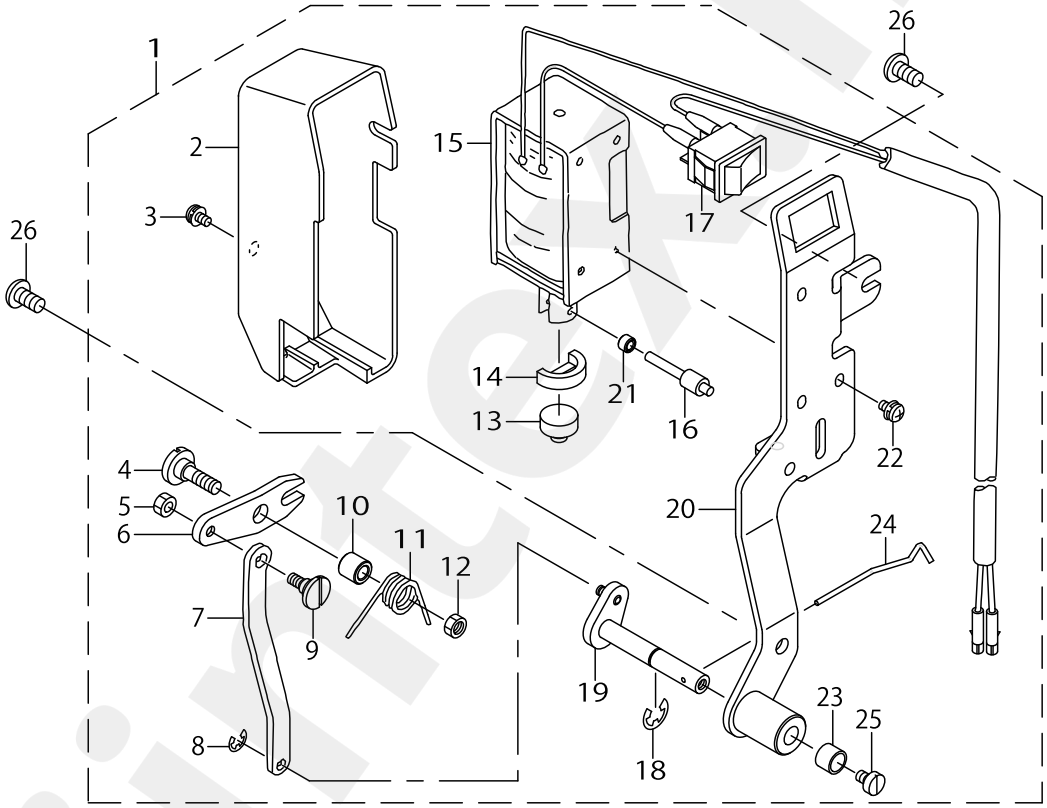

jintex.in

WIPER COMPONENTS

No.	Parts No.	Parts name	Remarks	Level	Cons	Qty
1	22955553	WIPER ASM.				1
2	22955504	WIPER COVER		*		1
3	SL4030631SC	SCREW M3X6		*		1
4	SD0650321TP	HINGE SCREW D=6.5 H=3.2		*		1
5	NS6090310SP	NUT 9/64-40		*		1
6	22956106	WIPER LINK A		*		1
7	22956403	WIPER LINK B		*		1
8	RE0250000K0	E-RING 2.5		*		1
9	22956908	WIPER LINK B HINGE SCREW		*		1
10	22956205	WIPER HINGE SCREW COLLAR		*		1
11	22956304	WIPER SPRING		*		1
12	NS6110310SP	NUT 11/64-40		*		1
13	22955900	WIPER RUBBER A		*		1
14	22956007	WIPER RUBBER B		*		1
15	40106936	WIPER SOLENOID ASM.		*		1
16	22957104	WIPER SOLENOID SHAFT		*		1
17	HA00600000A	SWITCH		*		1
18	RE0500000K0	E-RING		*		1
19	40041419	WIPER LINK C ASM.		*		1
20	11110152	WIPER BASE ASM.		*		1
21	22957203	WIPER LINK COLLAR		*		1
22	SL4030641SE	SCREW		*		3
23	22956809	WIPER COLLAR		*		1
24	22957005	WIPER		*		1
25	SS6090540SP	SCREW 9/64-40 L=5.0		*		1
26	SS4120915SP	SCREW 3/16-28 L=9				2

jintex.in

jintex.in

OIL LUBRICATION COMPONENTS

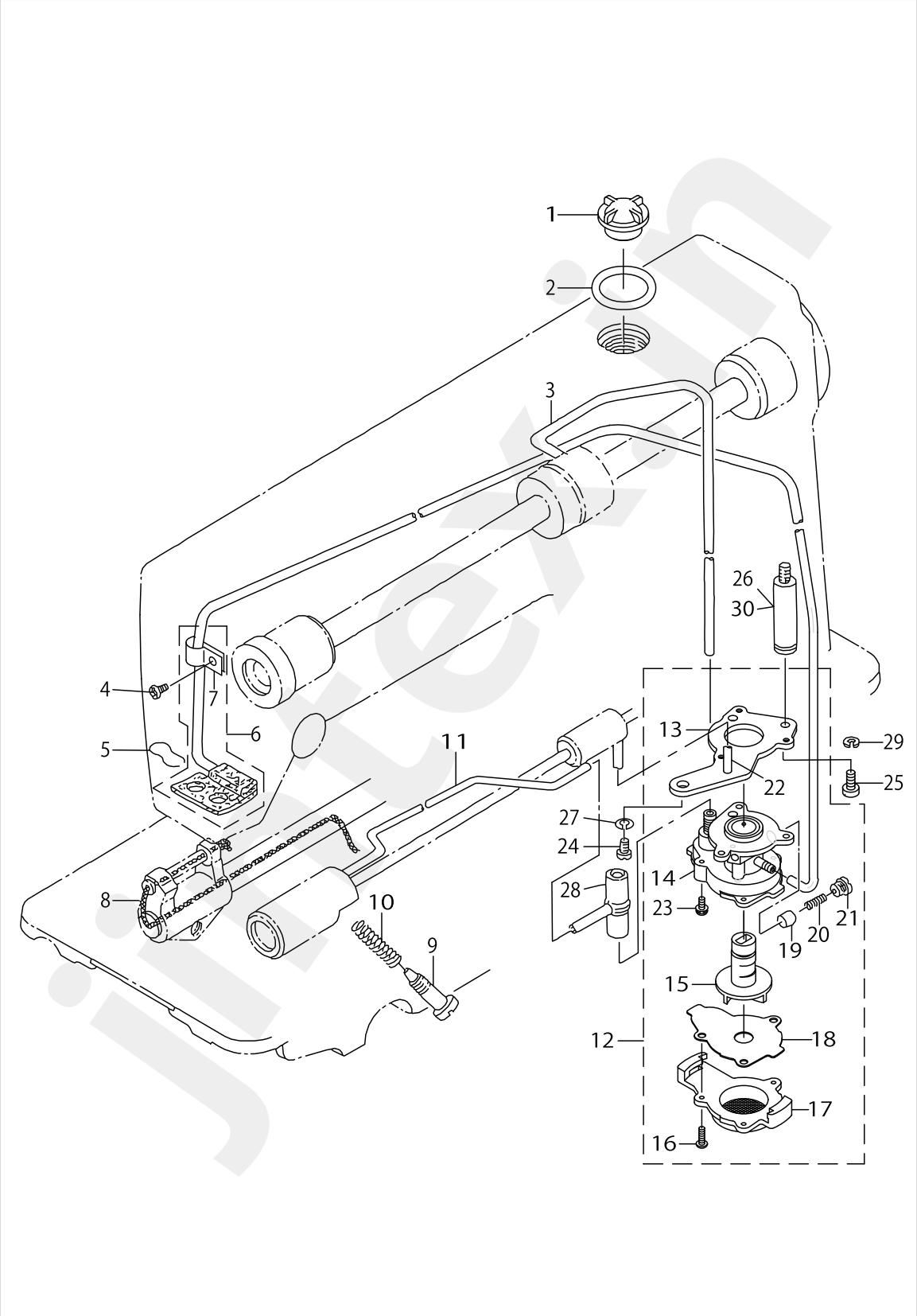

OIL LUBRICATION COMPONENTS

No.	Parts No.	Parts name	Remarks	Level	Cons	Qty
1	22924708	OIL SIGHT WINDOW				1
2	RO195240100	RUBBER RING				1
3	22924401	MAIN SHAFT OIL TUBE				1
4	SS4120615SP	SCREW 3/16-28 L=6				1
5	22925101	OIL FELT PRESSER				1
6	22924153	OIL RETURN TUBE ASM.				1
7	22924302	HOLDER		*		1
8	CQ252000000	OIL WICK				0.3
9	22925002	OIL ADJUSTING SCREW				1
10	22924906	SPRING				1
11	22924500	OIL TUBE				1
12	22923056	LUBRICATING OIL PUMP ASM.				1
13	22923312	OIL PUMP INSTALLING BASE		*		1
14	22923015	OIL PUMP		*		1
15	22923700	OIL PUMP IMPELLER		*		1
16	SE4301041SR	SCREW D=3 L=10		*		3
17	22923205	LUBRICATING OIL PUMP COVER		*		1
18	22923809	OIL PUMP IMPELLER COVER		*		1
19	22923403	PLUNGER		*		1
20	22923601	PLUNGER SPRING		*		1
21	22923502	PLUNGER SCREW		*		1
22	22923908	HOOK DRIVING SHAFT OIL TUBE		*		1
23	SL4030851SF	SCREW M3 L=8		*		3
24	SS4150915SP	SCREW 15/64-28 L=9				1
25	SS6111010TP	SCREW 11/64-40 L=9.5				1
26	22947105	OIL PUMP SUPPORT	FOR DDL-8700-7-0B,-WB			1
27	WS0651310KP	SPRING WASHER 6.5X11X1.3	FOR DDL-8700-7-0B,-WB			1
28	22924609	RUBBER JOINT				1
29	WS0451040KP	SPRING WASHER 4.5X8.5X1	FOR DDL-8700-7-0B,-WB			1
30	22924005	OIL PUMP SUPPORT	FOR DDL-8700-7-00			1

jintex.in

jintex.in

OIL RESERVOIR COMPONENTS

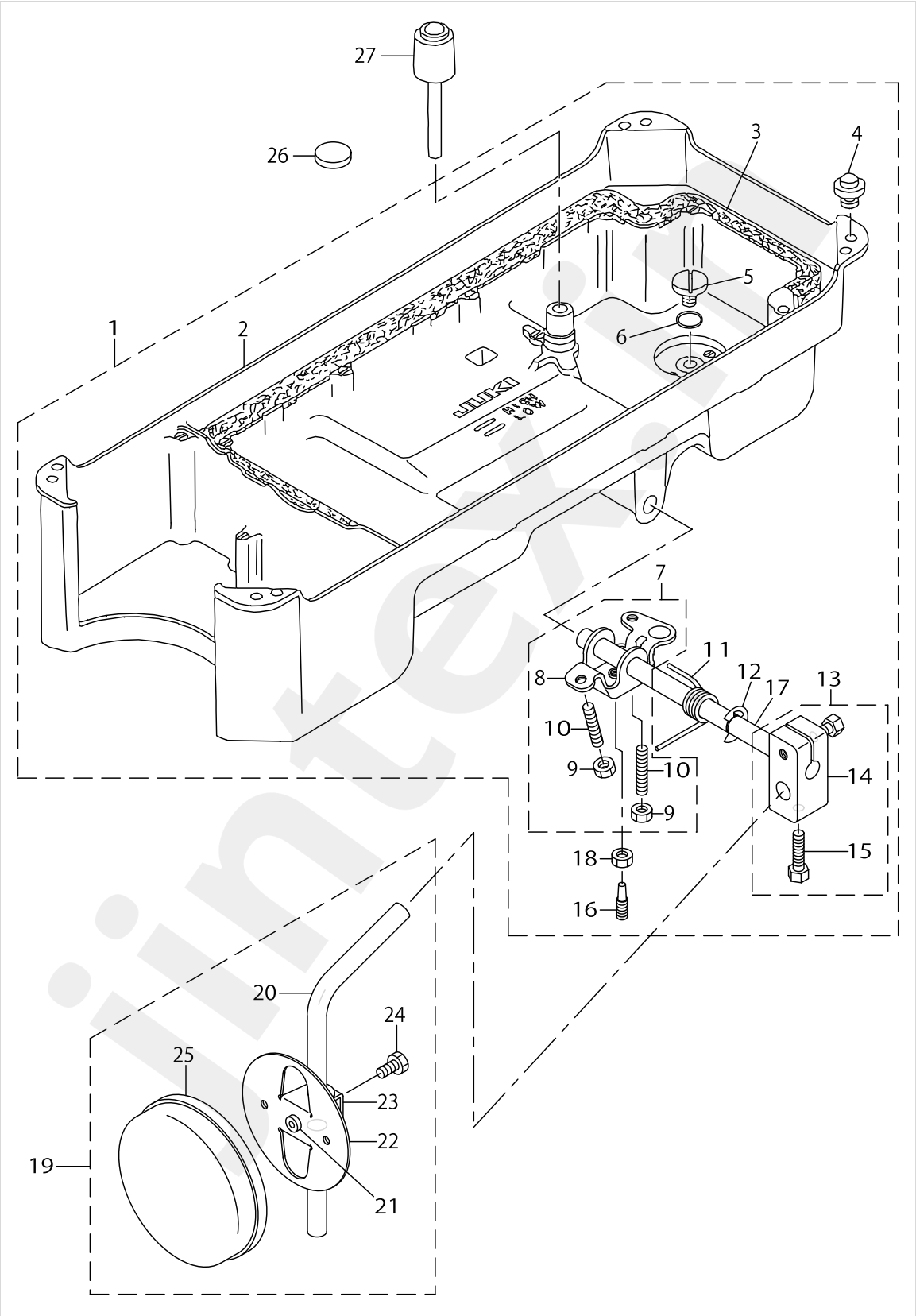

OIL RESERVOIR COMPONENTS

No.	Parts No.	Parts name	Remarks	Level	Cons	Qty
1	22931851	OIL RESERVOIR ASM.				1
2	22931802	OIL RESERVOIR		*		1
3	22931901	OIL RESERVOIR GASKET		*		1
4	22932008	RUBBER CUSHION		*		4
5	SS6700710SH	SCREW 5/16-24 L=7		*		1
6	RO098240100	RUBBER RING		*		1
7	22932156	KNEE LIFTER ROTATION ARM ASM.		*		1
8	22932107	KNEE LIFTING ROTATING ARM		*		1
9	NM6060001SE	NUT M6		*		2
10	SM8063012TR	SCREW M6 L=30		*		2
11	22932206	SPRING		*		1
12	RE1000000K0	E-RING 10		*		1
13	22932453	BRACKET ASM.		*		1
14	22932404	VERTICAL SHAFT FITTING ARM		*		1
15	22934707	SCREW		*		2
16	40101720	SCREW_M6		*		1
17	22932305	KNEE PRESS CROSS SHAFT		*		1
18	NM6060001SE	NUT M6		*		1
19	22934251	KNEE PAD PLATE ASM.				1
20	22934608	KNEE PAD UPRIGHT SHAFT		*		1
21	22934400	KNEE PAD PLATE RUBBER		*		1
22	22934202	KNEE PAD PLATE		*		1
23	22934301	KNEE PAD PLATE SUPPORT		*		1
24	SM9061203SE	SCREW M6 L=12		*		1
25	22934509	KNEE PAD PLATE COVER		*		1
26	B8228125000	OIL RESERVOIR MAGNET				1
27	22931703	KNEE LIFTER PUSH ROD				1

jintex.in

jintex.in

BELT COVER & BOBBIN COMPONENTS

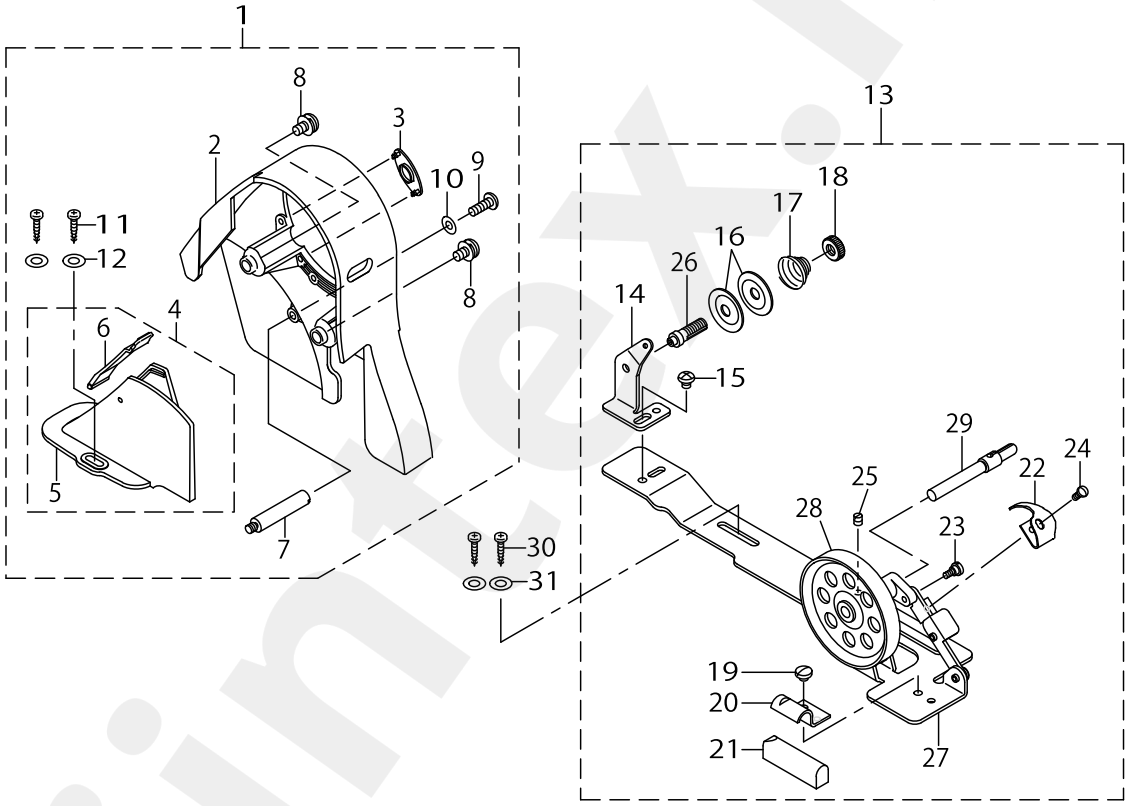

BELT COVER & BOBBIN COMPONENTS

No.	Parts No.	Parts name	Remarks	Level	Cons	Qty
1	22933451	BELT COVER ASM.				1
2	22933402	BELT COVER A		*		1
3	22933501	BELT COVER A CAP		*		1
4	22933659	BELT COVER B COMPL.		*		1
5	22933600	BELT COVER B		*		1
6	22933758	BELT COVER B CAP ASM.		*		1
7	22933907	BELT COVER SUPPORT		*		1
8	22934004	BELT COVER A SCREW		*		2
9	SS4121415SP	SCREW 3/16-28 L=14		*		1
10	WP0501016SD	WASHER 5X10.5X1		*		1
11	SK3412000SC	WOOD SCREW D=4.1 L=20		*		2
12	WP0450826SC	WASHER 4.5X10X0.8		*		2
13	22927354	BOBBIN WINDER CONPL.				1
14	22928501	THREAD TENSION BRACKET		*		1
15	SS4110515SP	SCREW 11/64-40 L=5		*		1
16	22928907	THREAD TENSION DISK		*		2
17	22929004	THREAD TENSION SPRING		*		1
18	22928808	THREAD TENSION NUT		*		1
19	SS7110350SP	SCREW 11/64-40 L=3.5		*		1
20	22928402	RUBBER BRAKE PRESSER PLATE		*		1
21	22928303	RUBBER BRAKE		*		1
22	22928105	POSITIONING FINGER		*		1
23	SD0490261SP	HINGE SCREW D=4.9 H=2.6		*		1
24	SS7081310SP	SCREW 1/8-44 L=12.5		*		1
25	SS8110510SP	SCREW 11/64-40 L=5		*		1
26	22928709	THREAD TENSION BRACKET		*		1
27	22927305	BOBBIN BASE		*		1
28	22927404	BOBBIN PULLEY		*		1
29	22927602	BOBBIN WINDER POST		*		1
30	SK3412000SC	WOOD SCREW D=4.1 L=20				2
31	WP0450826SC	WASHER 4.5X10X0.8				2

jintex.in

jintex.in

THREAD STAND COMPONENTS

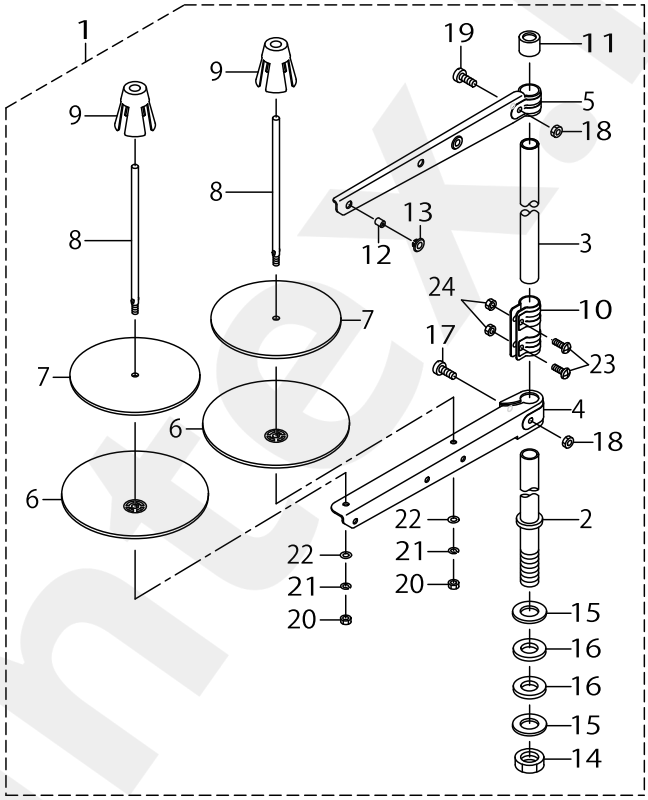

THREAD STAND COMPONENTS

No.	Parts No.	Parts name	Remarks	Level	Cons	Qty
1	40096354	THREAD STAND ASM.				1
2	40085784	SPOOL REST ROD LOWER		*		1
3	40085785	SPOOL REST ROD UPPER		*		1
4	40085786	SPOOL REST ARM LOWER		*		1
5	40085787	SPOOL REST ARM UPPER		*		1
6	40085788	SPOOL REST		*		2
7	40085789	SPOOL REST CUSHION		*		2
8	40085790	SPOOL PIN		*		2
9	40085791	SPOOL RETAINER		*		2
10	40085792	SPOOL REST ROD JOINT		*		1
11	40085793	SPOOL REST ROD RUBBER CAP		*		1
12	40085794	THREAD GUIDE		*		2
13	40085795	THREAD GUIDE BUSHING		*		2
14	40096325	SPOOL REST ROD NUT		*		1
15	WP1612616SE	WASHER 16X30X2.6		*		2
16	40085796	SPOOL REST ROD RUBBER CUSHION		*		2
17	40096326	SPOOL REST ARM LOWER SCREW		*		1
18	NM6050001SE	NUT M5		*		2
19	40096327	SPOOL REST ARM UPPER SCREW		*		1
20	NM6050001SE	NUT M5		*		2
21	WS0510002KN	SPRING WASHER M5		*		2
22	WP0531001SC	WASHER M5		*		2
23	SM4051405SE	SCREW M5 L=14		*		2
24	NM6050001SE	NUT M5		*		2

jintex.in

jintex.in

EXCLUSIVE PARTS FOR DDL-8700H-7

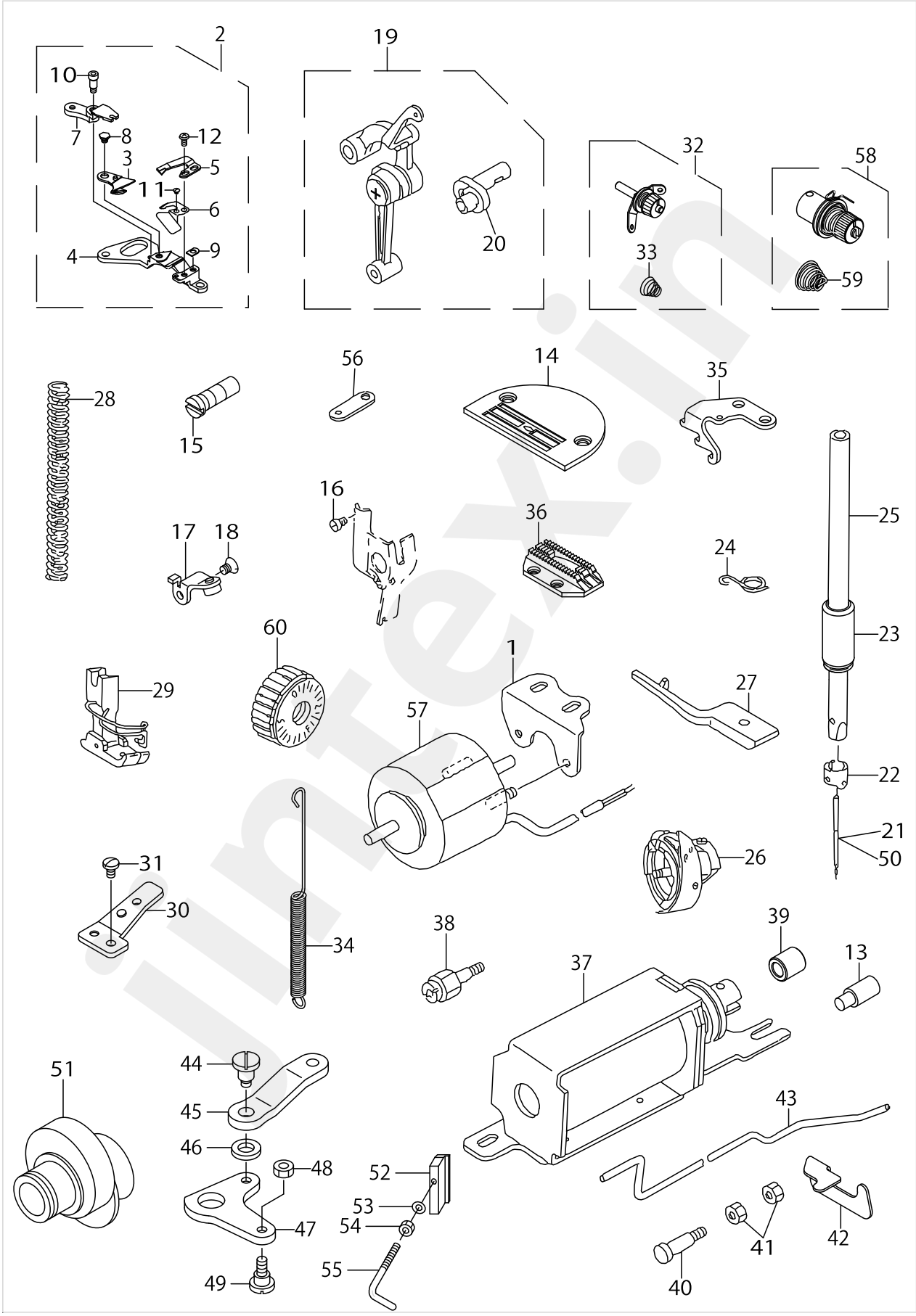

jintex.in

EXCLUSIVE PARTS FOR DDL-8700H-7

No.	Parts No.	Parts name	Remarks	Level	Cons	Qty
1	11094901	SOLENOID BASE				1
2	11095551	KNIFE UNIT				1
3	11409257	MOVING KNIFE J ASM.		*		1
4	11095502	KNIFE MOUNT BASE		*		1
5	40089755	FIX KNIFE		*		1
6	11095403	KNIFE THREAD GUIDE		*		1
7	11095601	KNIFE BRANCH		*		1
8	SD0500131TP	HINGE SCREW D=5 H=1.25		*		1
9	D2404555B00	COUNTER KNIFE SPACER		*		1
10	SD0460703TP	HINGE SCREW D=4.6 H=7		*		1
11	SS2060210SP	SCREW 3/32-56 L=2.3		*		1
12	SS4080620TP	SCREW 1/8-44 L=6		*		2
13	40010395	ADJUSTING LINK FULCRUM SHAFT B	FOR DDL-8700H-7-0B,-WB			1
14	11400801	THROAT PLATE J				1
15	B1213552000A	OIL ADJUSTING PIN				1
16	SS6080320SP	SCREW 1/8-44 L=2.5				1
17	11095254	LEVER STOPPER ASM.	FOR DDL-8700H-7-0B,-WB			1
18	SS1120710SP	SCREW 3/16-28 L=6.5	FOR DDL-8700H-7-0B,-WB			1
19	11091659	LINK THREAD TAKE-UP LEVER ASM.				1
20	11091600	NEEDLE BAR CRANK H		*		1
21	MDB100B2100	NEEDLE DBX1 #21				1
22	B1418415H00	NEEDLE BAR THREAD GUIDE				1
23	22970313	NEEDLE BAR BUSHING LOWER				1
24	40023223	NEEDLE BAR THREAD GUIDE				1
25	22970206	NEEDLE BAR				1
26	11092251	LUBRICATING HOOK ASM.				1
27	11093804	POSITIONING FINGER H				1
28	B1505552000A	PRESSER SPRING				1
29	D1524555EBL	PRESSER FOOT ASM.				1
30	22962807	WIRE PRESSER PLATE (LOWER) B	FOR DDL-8700H-7-0B,-WB			1
31	SS7110740TP	SCREW 11/64-40 L=7	FOR DDL-8700H-7-0B,-WB			1
32	22963458	THREAD TENSION ASM.				1
33	22963409	THREAD TENSION SPRING		*		1
34	40080725	ADJUSTING LINK SPRING				1
35	22970602	FEED SPRING HOOK				1
36	11403003	FEED J				1
37	11096658	SOLENOID MOUNTING BASE ASM.	FOR DDL-8700H-7-0B,-WB			1
38	11231503	OIL PUMP SUPPORT	FOR DDL-8700H-7-0B,-WB			1
39	22962609	REVERSE FEED BASE COLLAR	FOR DDL-8700H-7-0B,-WB			1
40	22962906	PLUNGER ARM PIN	FOR DDL-8700H-7-0B,-WB			1
41	NS6110420SP	NUT 11/64-40	FOR DDL-8700H-7-0B,-WB			2
42	22962708	TUBE HOLDER LOWER	FOR DDL-8700H-7-0B,-WB			1
43	11094109	OIL TUBE				1
44	SD0700711TP	HINGE SCREW D=7 H=7.1	FOR DDL-8700H-7-0B,-WB			1
45	22962500	SOLENOID CONNECTING LINK H	FOR DDL-8700H-7-0B,-WB			1
46	WP0722316SH	WASHER	FOR DDL-8700H-7-0B,-WB			1
47	11101508	REVERSE FEED LINK	FOR DDL-8700H-7-0B,-WB			1

jintex.in

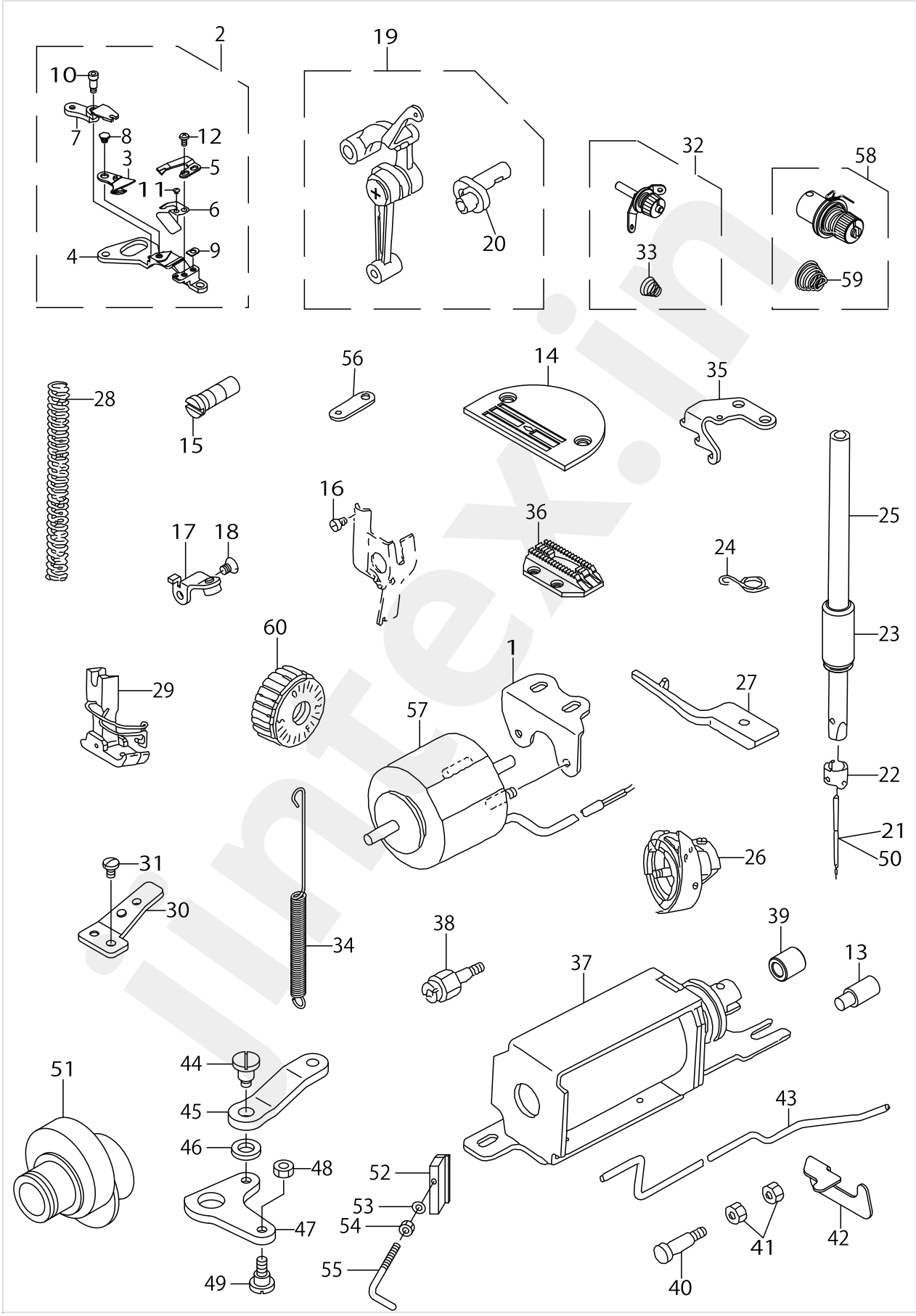
2
19
10
7
8
12
3
5
11
6
4
9
20
32
33
58
59
56
14
35
28
15
16
36
25
17
18
24
60
1
23
29
27
57
22
21
50
31
26
30
34
38
39
13
37
51
44
45
43
46
48
52
53
47
54
41
42
55
49
40

EXCLUSIVE PARTS FOR DDL-8700H-7

No.	Parts No.	Parts name	Remarks	Level	Cons	Qty
48	NS6110420SP	NUT 11/64-40	FOR DDL-8700H-7-0B,-WB			1
49	SD0700451TP	HINGE SCREW D=7 H=4.5	FOR DDL-8700H-7-0B,-WB			1
50	MC200501300	NEEDLE 134 NM130	FOR JE			1
51	22962351	FEED DRIVE ECCENTRIC CAM ASM.				1
52	11403805	THREAD GUIDE C FITTING PLATE				1
53	WP0371016SD	WASHER 3.7X8X1				1
54	NS6090310SP	NUT 9/64-40				1
55	22972608	ARM THREAD GUIDE C				1
56	11094604	CLUTCH LINK				1
57	11096500	THREAD TRIMMER SOLENOID				1
58	22962054	THREAD TENSION ASM.				1
59	22962005	THREAD TENSION SPRING		*		1
60	40101726	FEED_DIAL				1

jintex.in

jintex.in

EXCLUSIVE PARTS FOR DDL-8700J-7

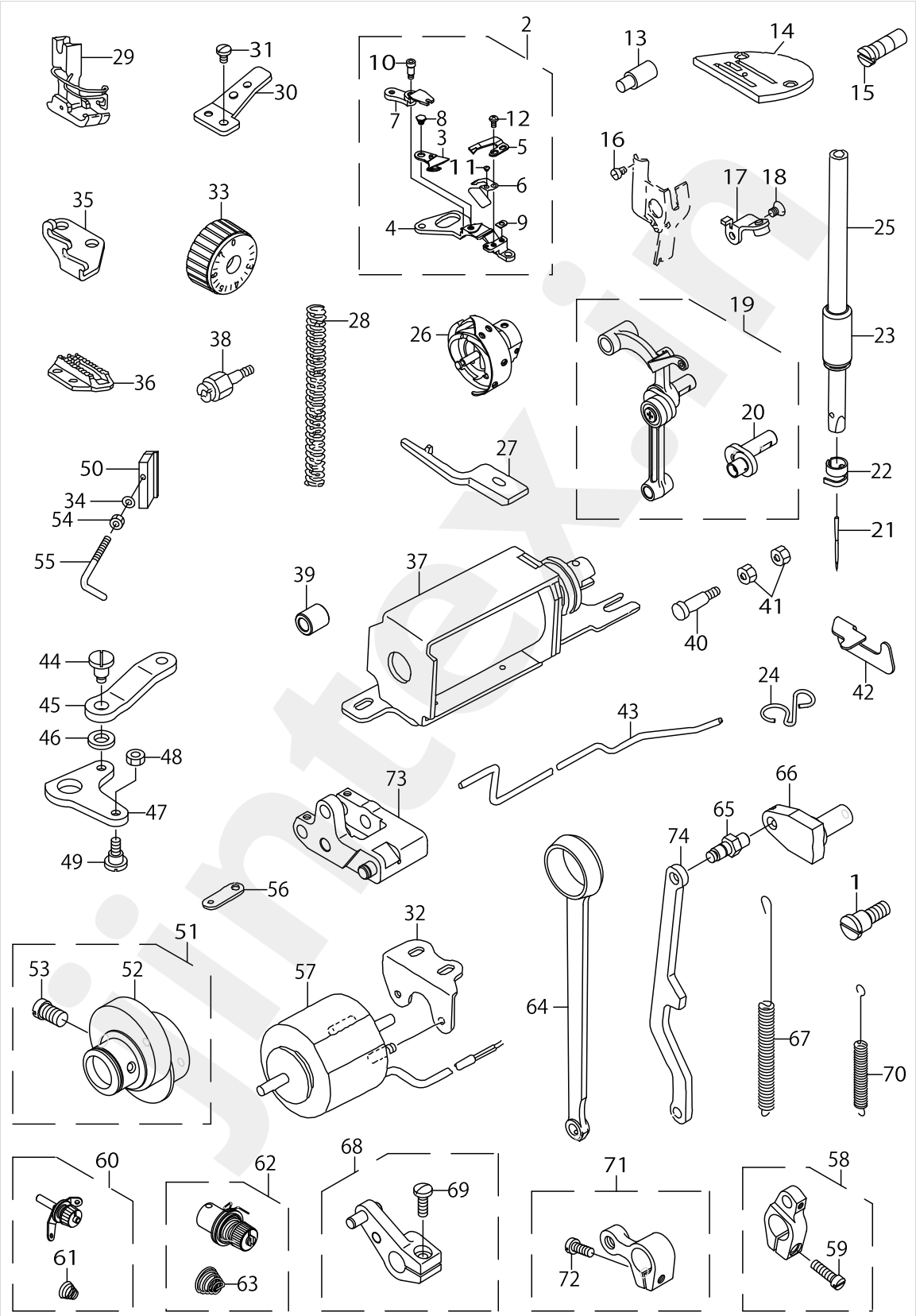

EXCLUSIVE PARTS FOR DDL-8700J-7

No.	Parts No.	Parts name	Remarks	Level	Cons	Qty
1	40031249	HINGE SCREW				1
2	11095551	KNIFE UNIT				1
3	11409257	MOVING KNIFE J ASM.		*		1
4	11095502	KNIFE MOUNT BASE		*		1
5	40089755	FIX KNIFE		*		1
6	23645401	THREAD GUIDE FOR KNIFE H		*		1
7	11095601	KNIFE BRANCH		*		1
8	SD0500131TP	HINGE SCREW D=5 H=1.25		*		1
9	D2404555B00	COUNTER KNIFE SPACER		*		1
10	SD0460703TP	HINGE SCREW D=4.6 H=7		*		1
11	SS2060210SP	SCREW 3/32-56 L=2.3		*		1
12	SS4080620TP	SCREW 1/8-44 L=6		*		2
13	40010395	ADJUSTING LINK FULCRUM SHAFT B				1
14	11062007	THROAT PLATE A				1
15	B1213552000A	OIL ADJUSTING PIN				1
16	SS6080320SP	SCREW 1/8-44 L=2.5				1
17	11095254	LEVER STOPPER ASM.				1
18	SS1120710SP	SCREW 3/16-28 L=6.5				1
19	11062858	LINK THREAD TAKE-UP LEVER ASM.				1
20	11062809	NEEDLE BAR CRANK		*		1
21	MDP500B2100	NEEDLE DPX5 #21				1
22	22970404	NEEDLE BAR THREAD HOOK				1
23	22970313	NEEDLE BAR BUSHING LOWER				1
24	40012444	NEEDLE BAR THREAD GUIDE				1
25	22970206	NEEDLE BAR				1
26	40035058	HOOK ASM.				1
27	22942502	INNER HOOK PRESSER				1
28	B1505552000A	PRESSER SPRING				1
29	40064839	PRESSER FOOT ASM.				1
30	22962807	WIRE PRESSER PLATE (LOWER) B				1
31	SS7110740TP	SCREW 11/64-40 L=7				1
32	11094901	SOLENOID BASE				1
33	40039674	FEED DIAL				1
34	WP0371016SD	WASHER 3.7X8X1				1
35	22970602	FEED SPRING HOOK				1
36	11062601	FEED DOG				1
37	11096658	SOLENOID MOUNTING BASE ASM.				1
38	11231503	OIL PUMP SUPPORT				1
39	22962609	REVERSE FEED BASE COLLAR				1
40	22962906	PLUNGER ARM PIN				1
41	NS6110420SP	NUT 11/64-40				2
42	22962708	TUBE HOLDER LOWER				1
43	11094109	OIL TUBE				1
44	SD0700711TP	HINGE SCREW D=7 H=7.1				1
45	22962500	SOLENOID CONNECTING LINK H				1
46	WP0722316SH	WASHER				1
47	11101508	REVERSE FEED LINK				1

jintex.in

EXCLUSIVE PARTS FOR DDL-8700J-7

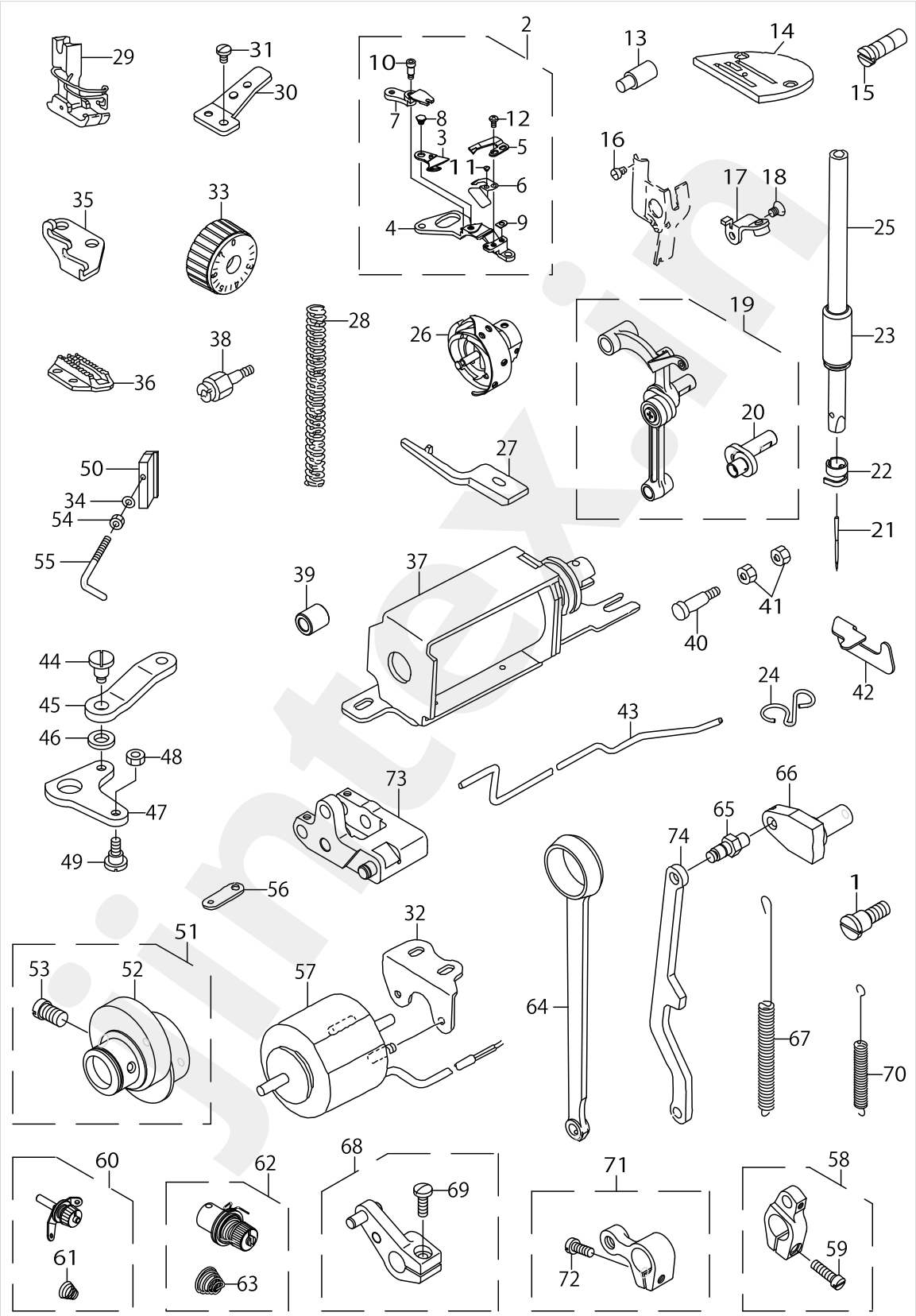

EXCLUSIVE PARTS FOR DDL-8700J-7

No.	Parts No.	Parts name	Remarks	Level	Cons	Qty
48	NS6110420SP	NUT 11/64-40				1
49	SD0700451TP	HINGE SCREW D=7 H=4.5				1
50	11403805	THREAD GUIDE C FITTING PLATE				1
51	22970552	FEED ECCENTRIC CAM ASM.				1
52	22970503	FEED ECCENTRIC CAM L		*		1
53	22972806	FEED ECCENTRIC CAM SETSCREW		*		2
54	NS6090310SP	NUT 9/64-40				1
55	22972608	ARM THREAD GUIDE C				1
56	11094604	CLUTCH LINK				1
57	11096500	THREAD TRIMMER SOLENOID				1
58	22970859	HORIZONTAL FEED ARM ASM.				1
59	SS6121610SP	SCREW 3/16-28 L=15.5		*		1
60	22963458	THREAD TENSION ASM.				1
61	22963409	THREAD TENSION SPRING		*		1
62	22962054	THREAD TENSION ASM.				1
63	22962005	THREAD TENSION SPRING		*		1
64	22970701	HORIZONTAL FEED ROD				1
65	22971204	FEED REGULATOR BASE PIN				1
66	22971303	FEED REGULATOR BASE				1
67	11302619	SPRING				1
68	22971550	FEED LEVER ARM ASM.				1
69	SS7121410TP	SCREW 3/16-28 L=14		*		1
70	22971709	FEED REVERSE SPRING				1
71	22972251	VERTICAL FEED ARM ASM.				1
72	SS6121610SP	SCREW 3/16-28 L=15.5		*		1
73	40031240	FEED ADJUST LINK ASM.				1
74	40031244	FEED ADJUST ROD				1

jintex.in

jintex.in

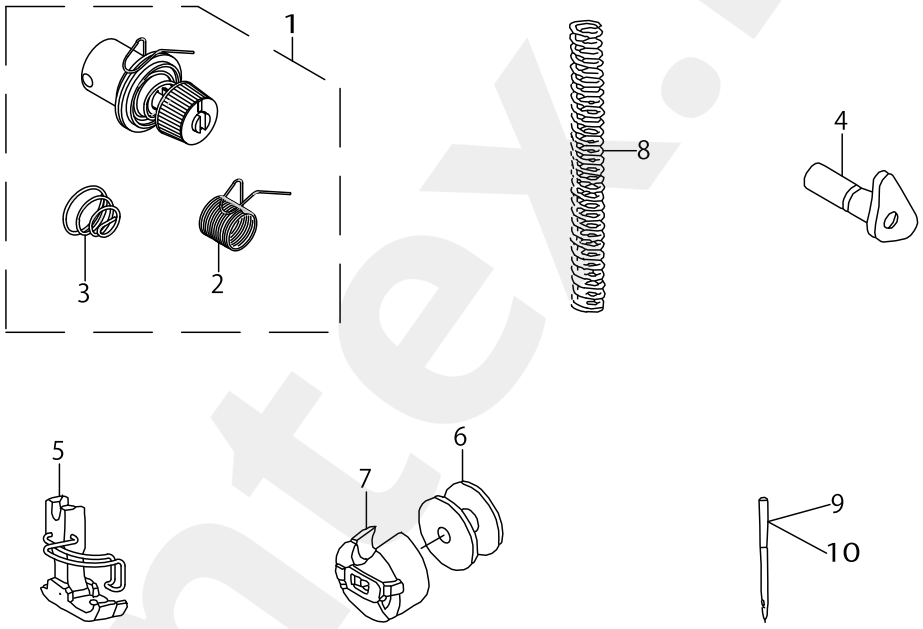

jintex.in

EXCLUSIVE PARTS FOR DDL-8700A-7

No.	Parts No.	Parts name	Remarks	Level	Cons	Qty
1	40011503	THREAD TENSION ASM.				1
2	40054784	THREAD TAKE-UP SPRING		*		1
3	40054785	THREAD TENSION SPRING		*		1
4	11092558	HAND LIFTER CAM ASM.				1
5	D1524555DBA	PRESSER FOOT ASM.				1
6	22964001	BOBBIN (A)				1
7	B18370120A0	BOBBIN CASE ASM.				1
8	B1505227T00A	PRESSER SPRING T				1
9	MC200500650	NEEDLE 134 NM65	FOR JE			1
10	MDA100B0900	NEEDLE DAX1 #9				1

jintex.in

jintex.in

As to the place changed,refer to the corresponding Rev.No.
When previous parts(Obsoleted part)and new parts(Added parts)are not interchangeable with each other:
In this case,even obsoleted parts(D.)can be ordered with the obsoleted part number,so select the parts with changed dates and place your orders.

変更箇所は,該当Rev.No.版をご参照ください。
部品の互換性がない変更の場合は,削除された品番でも,ご注文できます。

29347002
No.1307-09・・Rev.No.

*A:Added parts追加部品/D:Obsoleted parts削除部品/E:Erratum訂正

*	Rev. No.	Page 頁	Ref. No.	Parts No. 品 番	*	Rev. No.	Page 頁	Ref. No.	Parts No. 品 番
D	08	2	1	229-02159	A	09	2	1	401-02097
D	08	2	8	SS-4120915-SP	A	09	2	8	SS-4120925-SP
D	08	2	20	400-93432	A	09	2	20	401-11022
D	08	2	50	SS-4120915-SP	A	09	2	50	SS-4120925-SP
D	08	2	61	229-02605	A	09	2	61	400-99083
D	08	2	62	SS-7110540-SP	A	09	2	62	SS-7110720-SP
D	08	2	63	WP-0501016-SD					
					A	09	2	63	401-16677
D	08	2	64	SS-4121215-SP					
D	08	2	66	M6008-350-AAL					
D	08	2	67	M6008-350-AAA					
D	08	2	68	M6008-350-AAF					
D	08	4	4	110-39070	A	09	4	4	229-18072
D	08	4	5	110-39062	A	09	4	5	229-18064
D	08	4	6	B1905-541-B00	A	09	4	6	229-18403
					A	09	4	7	229-18502
					A	09	4	8	229-18601
					A	09	4	9	229-18700
D	08	4	7	110-05204	A	09	4	10	229-18106
D	08	4	8	B1408-552-000	A	09	4	11	229-06606
D	08	4	9	B1903-552-000	A	09	4	12	229-18304
D	08	4	10	229-03157	A	09	4	13	401-06606
D	08	4	21	110-02508	A	09	4	21	401-05231
D	08	6	1	229-01409	A	09	6	1	TA-0850604-R0
D	08	6	12	B1307-155-0C0					
D	08	6	13	B1306-155-0B0					
D	08	6	14	B1305-012-0A0	A	09	6	14	400-90002
D	08	6	16	B1306-155-0A0	A	09	6	16	400-90003
D	08	6	18	B1307-155-0B0					
D	08	6	19	B1307-155-0A0	A	09	6	19	400-90004
D	08	6	21	B1308-155-0A0	A	09	6	21	400-90005
D	08	6	36	229-17058	A	09	6	36	401-01694
D	08	6	45	SS-4120915-SP	A	09	6	13	SS-4120925-SP
D	08	10	31	229-40803	A	09	10	31	401-01462
D	08	10	43	229-10350	A	09	10	43	401-10379
D	08	10	45	229-15151	A	09	10	45	401-09422

jintex.in

LIST FOR INFORMATION OF CHANGE(2)

*	Rev. No.	Page 頁	Ref. No.	Parts No. 品 番	*	Rev. No.	Page 頁	Ref. No.	Parts No. 品 番
D	08	10	64	229-12604	A	09	10	64	401-00812
D	08	10	66	229-12752	A	09	10	66	401-02264
D	08	10	67	SM-8061050-TP					
					A	09	12	48	229-51164
D	08	12	49	400-85586	A	09	12	49	401-06930
D	08	12	50	HK-0346400-0B					
D	08	12	53	400-85587	A	09	12	53	401-06931
D	08	14	15	400-90290	A	09	14	15	401-06936
D	08	18	6	RO-1082401-00	A	09	18	6	RO-0982401-00
D	08	18	16	SM-9062563-TR	A	09	18	16	401-01720
D	08	20	1	229-30358	A	09	20	1	400-96354
D	08	22	1	110-93366					
D	08	22	32	M6009-350-AAA					
D	08	22	33	229-11903	A	09	22	60	401-01726
D	08	24	1	110-93366					
D	08	24	6	110-95403	A	09	24	6	236-45401
D	08	24	32	229-90758					
E	08	24	33	400-31248	A	09	24	33	400-39674
D	08	24	55	113-05513	A	09	24	55	229-72608
D	08	25	4	M6018-350-AAA					

jintex.in

jintex.in

HOW TO MAKE USE OF THIS PARTS LIST

1.Explanation of codes

1)"*"mark.....means this part is changed from the previous parts book.

As to the details of the change, refer to the "List for information of change".

2)"#01".....refer to "Note" explanation at bottom of page.

2.Codes on the "Qty" column

・Each numeral indicates the number of parts required.

・"0.1" and "2.5" indicate the length (in meters) of the respective parts.

3.Parentheses mean that the corresponding part is a subpart that constructs an assembly part.

4.Dotted lines on the Figures indicate assembly parts.

１."注記"欄の記号説明

１）"＊"印.....前回のパーツブックに比較して今回変更された部品を意味します。

変更内容は、"変更情報リスト"を参照してください。

２）"#01".....ページ下の"注記"の説明を参照してください。

２.数量欄の数字は、個数を表し、0.1、2.5等の数値は、長さ（単位メートル）を表します。

３.数量欄の（　）は、組部品を構成している子部品であることを意味します。

４.イラストページのーーーーー枠は、組構成であることを意味します。

jintex.in

jintex.in

NUMERICAL INDEX OF PARTS

PART NO	PAGE	REF NO.
11002409	6	20
11002904	6	3
11009800	16	5·68
11010311	14	17
11015906	10	39
11028008	4	60·64
11030202	4	59
11037405	14	22
11038650	10	24·34
11038759	10	42
11040052	18	5
11040300	18	6
11040359	18	1
11040409	18	4
11040508	18	3
11040854	18	45
11040953	18	44
11062007	38	14
11062601	38	36
11062809	38	20
11062858	38	19
11091600	34	20
11091659	34	19
11092251	34	26
11092558	42	4
11093804	34	27
11094109	34	43
11094109	38	43
11094604	36	56
11094604	40	56
11094901	34	1
11094901	38	32
11095254	34	17
11095254	38	17
11095403	34	6
11095502	34	4
11095502	38	4
11095551	34	2
11095551	38	2
11095601	34	7
11095601	38	7
11096500	36	57
11096500	40	57
11096658	34	37
11096658	38	37
11101508	34	47
11101508	38	47
11110152	24	20
11141355	10	24·34
11231503	34	38
11231503	38	38
11302619	40	67
11313103	18	7
11400801	34	14
11403003	34	36
11403805	36	52
11403805	40	50
11409257	34	3
11409257	38	3
11415205	4	28·58
22900401	2	10
22900609	2	28·58
22900757	2	4
22901003	4	55
22901201	4	52
22901250	4	51
22901300	4	53
22901805	2	14
22903009	6	44
22903108	6	15
22903207	6	25
22903306	6	27
22903900	6	40
22904155	6	23
22904155	16	61
22905004	10	23
22905103	10	25
22905202	10	26
22906101	10	2
22906200	10	8
22906309	10	10
22906457	10	4
22906606	6	11
22907208	12	34
22907307	12	36
22907406	12	33
22907505	12	32
22907554	12	30
22907604	12	31
22907703	12	45
22907802	12	1
22908008	12	42
22908156	12	40
22908305	12	44
22908354	12	39
22908552	12	4
22908701	12	7
22908800	12	14
22908909	12	11
22909006	12	13
22910004	8	48
22910053	6	46
22910103	6	42
22910202	14	12·52
22910459	16	60
22910806	14	28
22910905	14	24
22911002	14	40
22911101	14	13
22911408	14	23
22911507	14	2
22911606	14	4
22911705	14	5·68
22911804	14	7
22912000	14	9
22912109	14	8
22912257	14	19
22912505	14	20
22912802	16	65
22912901	14	39
22913008	16	51
22913701	14	38
22913800	16	12·52
22914105	16	69
22915003	14	15
22915201	16	48
22915359	16	58
22916001	10	31
22916100	10	35
22916308	10	27
22916506	10	40
22916555	10	38
22917157	10	29
22918064	6	5
22918072	6	4

jintex.in

NUMERICAL INDEX OF PARTS

PART NO	PAGE	REF NO.
22918106	6	10
22918304	6	12
22918403	6	6～9
22918502	6	6～9
22918601	6	6～9
22918700	6	6～9
22919203	6	29
22919559	6	2
22920102	12	29
22920201	12	23
22920300	12	26
22920409	12	24
22920508	2	30
22920607	2	47
22921001	2	31
22921209	2	38
22921308	2	33
22921407	2	34
22921506	2	37
22921605	2	39
22921704	2	35
22921803	2	36
22923015	26	14
22923056	26	12
22923205	26	17
22923312	26	13
22923403	26	19
22923502	26	21
22923601	26	20
22923700	26	15
22923809	26	18
22923908	26	22
22924005	26	30
22924153	26	6
22924302	26	7
22924401	26	3
22924500	26	11
22924609	26	28
22924708	26	1
22924807	20	58
22924906	26	10
22925002	26	9
22925101	26	5
22927305	30	27
22927354	30	13
22927404	30	28
22927602	30	29
22928105	30	22
22928303	30	21
22928402	30	20
22928501	30	14
22928709	30	26
22928808	30	18
22928907	30	16
22929004	30	17
22931703	28	27
22931802	28	2
22931851	28	1
22931901	28	3
22932008	28	4
22932107	28	8
22932156	28	7
22932206	28	11
22932305	28	17
22932404	28	14
22932453	28	13
22932909	10	41
22933402	30	2
22933451	30	1
22933501	30	3
22933600	30	5
22933659	30	4
22933758	30	6
22933907	30	7
22934004	30	8
22934202	28	22
22934251	28	19
22934301	28	23
22934400	28	21
22934509	28	25
22934608	28	20
22934707	28	15
22935407	4	57
22937056	6	34
22937064	6	30·31
22937155	6	35·39
22937254	6	36·38
22937965	6	43
22939508	10	3·12
22939607	10	3·12
22940506	14	10
22940654	16	55
22940753	14	35
22940951	14	27
22941108	14	1
22941306	14	36
22942502	10	32
22942502	38	27
22942601	10	43
22944508	12	18
22944607	12	20
22944706	12	10
22944854	12	28
22945109	12	25
22945307	2	40
22945356	2	32
22945414	2	22
22945463	2	21
22945505	2	25
22945604	2	23
22945703	2	26
22945802	2	24
22947105	26	26
22948301	18	35
22948400	18	37
22949002	18	43
22949101	18	40
22949200	18	41
22949309	18	38
22949408	18	29
22949754	18	24
22949762	18	23
22949903	20	55
22950000	18	26
22950109	18	31
22950208	18	14
22950257	18	13
22950356	18	15
22950703	18	25
22950851	18	19
22950950	18	21
22951008	20	57
22951164	20	48
22951404	20	50
22951552	20	59

jintex.in

NUMERICAL INDEX OF PARTS

PART NO	PAGE	REF NO.
22952501	2	18
22953509	22	24
22953657	22	17
22953806	22	15
22953905	22	19
22954002	22	28
22954101	22	4
22954150	22	1
22954200	22	5
22954309	22	6
22954408	22	12
22954507	22	13
22954606	22	2
22954705	2	9
22955504	24	2
22955553	24	1
22955900	24	13
22956007	24	14
22956106	24	6
22956205	24	10
22956304	24	11
22956403	24	7
22956809	24	23
22956908	24	9
22957005	24	24
22957104	24	16
22957203	24	21
22958300	2	7
22962005	36	59
22962005	40	63
22962054	36	58
22962054	40	62
22962351	36	51
22962500	34	45
22962500	38	45
22962609	34	39
22962609	38	39
22962708	34	42
22962708	38	42
22962807	34	30
22962807	38	30
22962906	34	40
22962906	38	40
22963409	34	33
22963409	40	61
22963458	34	32
22963458	40	60
22964001	42	6
22970206	34	25
22970206	38	25
22970313	34	23
22970313	38	23
22970404	38	22
22970503	40	52
22970552	40	51
22970602	34	35
22970602	38	35
22970701	40	64
22970859	40	58
22971204	40	65
22971303	40	66
22971550	40	68
22971709	40	70
22972251	40	71
22972608	36	55
22972608	40	55
22972806	40	53
23645401	38	6
40010395	34	13
40010395	38	13
40011503	42	1
40012126	2	2
40012129	2	11
40012444	10	7·18
40012444	38	24
40017623	6	30·31
40017624	6	35·39
40017625	6	36·38
40017805	12	35
40023223	34	24
40031240	40	73
40031244	40	74
40031249	38	1
40035058	38	26
40039674	38	33
40041419	24	19
40054784	42	2
40054785	42	3
40060989	12	5
40064839	38	29
40080725	34	34
40085585	22	25
40085784	32	2
40085785	32	3
40085786	32	4
40085787	32	5
40085788	32	6
40085789	32	7
40085790	32	8
40085791	32	9
40085792	32	10
40085793	32	11
40085794	32	12
40085795	32	13
40085796	32	16
40087245	18	30
40089548	14	25
40089755	34	5
40089755	38	5
40090002	10	14
40090003	10	16
40090004	10	19
40090005	10	21
40090058	10	6
40093417	14	26
40096325	32	14
40096326	32	17
40096327	32	19
40096354	32	1
40099083	4	61
40100812	16	64
40101462	14	31
40101694	10	36
40101720	28	16
40101726	36	60
40102097	2	1
40102264	16	66
40105231	6	21
40106606	6	13
40106930	20	49
40106931	20	53
40106936	24	15
40109422	14	45
40110379	14	43
40111022	2	20

jintex.in

NUMERICAL INDEX OF PARTS

PART NO	PAGE	REF NO.
40116677	4	63
B1109012I0B	2	44
B1109552000	4	60·64
B1213552000A	34	15
B1213552000A	38	15
B1215552000	6	26
B1418415H00	34	22
B1505227T00A	42	8
B1505552000A	34	28
B1505552000A	38	28
B1521555000	12	2
B15240120BA	12	9
B1613012A00	16	33·70
B1613012I00	14	33·70
B18370120A0	42	7
B3118552E00	2	43
B8228125000	28	26
CM300200001	2	12
CM301200001	2	13
CQ252000000	26	8
D1524555DBA	42	5
D1524555EBL	34	29
D2404555B00	34	9
D2404555B00	38	9
D2406555D0H	18	10
D2468555B00	22	22
EA9500B0100	6	28
HA001900000	22	11
HA00600000A	24	17
HK034610140	18	11
HK03464000B	22	29
HW500070000	22	9
MC200500650	42	9
MC200500900	10	11·28
MC200501300	36	50
MDA100B0900	42	10
MDB100B1400	10	11·28
MDB100B2100	34	21
MDP500B2100	38	21
NM6040001SE	20	52
NM6050001SE	32	24
NM6060001SE	28	18
NS6090310SP	24	5
NS6090310SP	36	54
NS6090310SP	40	54
NS6110310SP	24	12
NS6110420SP	34	48
NS6110420SP	36	48
NS6110420SP	38	48
NS6110420SP	40	48
NS6150430SP	18	33
NS6620310SP	12	21
NS6680410SP	14	42
RC0150001KP	14	54
RC0150001KP	16	54
RC1850001KP	6	22
RE0250000K0	24	8
RE0400000K0	18	39
RE0400000K0	22	23
RE0400000KP	22	18
RE0500000K0	12	43
RE0500000K0	14	21
RE0500000K0	18	56
RE0500000K0	20	56
RE0500000K0	24	18
RE0500000KP	22	14
RE0600000K0	18	34
RE0900000K0	22	16
RE1000000K0	28	12
RE1200000K0	22	20
RO029180100	6	41
RO037180100	12	3
RO044240100	6	18
RO078190100	16	63
RO092270200	14	16
RO098240100	28	6
RO195240100	26	2
SD0460703TP	18	2
SD0460703TP	34	10
SD0460703TP	38	10
SD0490261SP	30	23
SD0500131TP	34	8
SD0500131TP	38	8
SD0600361SP	18	46
SD0630275SP	18	18
SD0640631TP	20	60
SD0641451SP	18	17
SD0650321TP	24	4
SD0700451TP	36	49
SD0700451TP	40	49
SD0700711TP	34	44
SD0700711TP	38	44
SD0720331SP	12	12
SD1000801SH	14	47
SE4301041SR	26	16
SK3412000SC	30	30
SL4030631SC	24	3
SL4030641SE	24	22
SL4030851SF	26	23
SL4051001MZ	6	45
SM4031501SC	22	8
SM4040655SP	22	3
SM4041655SP	22	7
SM4051405SE	32	23
SM8061010TP	16	67
SM8063012TR	28	10
SM9061203SE	28	24
SS1120710SP	34	18
SS1120710SP	38	18
SS2060210SP	18	8
SS2060210SP	34	11
SS2060210SP	38	11
SS2110915SP	2	46
SS2110920TP	2	45
SS4080620TP	14	34
SS4080620TP	18	9
SS4080620TP	34	12
SS4080620TP	38	12
SS4090615SP	6	19
SS4110515SP	12	16
SS4110515SP	14	37
SS4110515SP	30	15
SS4110715SP	18	28
SS4110915TP	10	33
SS4120615SP	2	29
SS4120615SP	12	27
SS4120615SP	22	27·30
SS4120615SP	26	4
SS4120915SP	22	27·30
SS4120915SP	24	26
SS4120925SP	2	50
SS4120925SP	4	50
SS4120925SP	10	13
SS4121415SP	30	9
SS4150915SP	12	17

jintex.in

NUMERICAL INDEX OF PARTS

PART NO	PAGE	REF NO.
SS4150915SP	18	47
SS4150915SP	26	24
SS4151215SP	20	61
SS4151215SP	22	26
SS6060210SP	4	54
SS6080320SP	34	16
SS6080320SP	38	16
SS6080410SP	2	3
SS6090510TP	18	16
SS6090540SP	24	25
SS6090620TP	14	41
SS6090670TP	10	5
SS6090670TP	14	3
SS6090910SP	12	38
SS6110420TP	10	30
SS6110610TP	4	48
SS6110710TP	20	54
SS6111010TP	26	25
SS6111210SP	6	37
SS6121610SP	14	44
SS6121610SP	40	72
SS6121840SP	2	17
SS6121860SP	14	11
SS6660610TP	18	20
SS6661110SP	6	47
SS6700710SH	28	5
SS7080510TP	10	9
SS7081310SP	30	24
SS7090610SP	18	42
SS7091110TP	12	6
SS7110350SP	30	19
SS7110720SP	4	62
SS7110740TP	16	53
SS7110740TP	34	31
SS7110740TP	38	31
SS7111120SP	16	59
SS7120770SH	14	6
SS7121410TP	16	56
SS7121410TP	40	69
SS7121610SP	14	46
SS7681650TP	6	14
SS8090670SP	2	41
SS8110410TP	10	37
SS8110510SP	30	25
SS8110520TP	18	22

PART NO	PAGE	REF NO.
SS8150710TP	2	42
SS8150710TP	14	29
SS8151150TP	6	1
SS8151550SP	6	33
SS8660610TP	6	24
SS8660610TP	16	62
SS8660810TP	10	22
SS8660810TP	12	37
SS8681650TP	6	16
TA0850604R0	2	5
TA0850604R0	10	1
TA1250406R0	4	49
TA1250705R0	2	6
TA2000502R0	2	16
TA2101002R0	2	19
WP0371016SD	36	53
WP0371016SD	38	34
WP0450801SD	6	32
WP0450826SC	30	31
WP0480856SP	16	57
WP0501016SD	30	10
WP0531001SC	32	22
WP0621016SH	18	32
WP0722316SH	34	46
WP0722316SH	38	46
WP1602616SZ	22	21
WP1612616SE	32	15
WS0410002KR	20	51
WS0451040KP	26	29
WS0510002KN	32	21
WS0651310KP	26	27
WT0530002KS	4	56

jintex.in