JINTEX

Sewing Machine Spare Parts

Juki DDL-9000B (X73199)

Sewing Machine Part Book

67 pages

jintex.in | enquiry@jintex.in | +91 96321 55211

33 Park Road, Akkipet Circle, Bangalore

MODEL　: DDL-9000B/X73199
List No : 1686-00

PARTS LIST

Published:09/10/2017

jintex.in

CONTENTS

MACHINE FRAME & MISCELLANEOUS COVER COMPONENTS 1
BOBBIN WINDER COMPONENTS 5
MAIN SHAFT & NEEDLE BAR COMPONENTS 7
HAND LIFTER & TENSION RELEASE COMPONENTS 11
FEED ADJUST MECHANISM COMPONENTS 15
HORIZONTAL FEED, VERTICAL FEED & HOOK DRIVING SHAFT COMPONENTS 17
THREAD TRIMMER COMPONENTS (1) 21
THREAD TRIMMER COMPONENTS (2) 25
OIL LUBRICATION COMPONENTS 27
AUTOMATIC REVERSE FEED COMPONENTS 31
CONDENSE COMPONENTS 33
WIPER COMPONENTS (FOR DDL-9000B-**-WB) 35
THREAD STAND COMPONENTS 37
UNDER COVER COMPONENTS 39
ACCESSORIE PART COMPONENTS 41
EXCLUSIVE PARTS DDL-9000B DS 43
EXCLUSIVE PARTS DDL-9000B MS,MA 45
EXCLUSIVE PARTS DDL-9000B SH 47
TABLE & STAND COMPONENTS 51
SPECIAL ORDER PART 53
NEEDLE THREAD PRESSER COMPONENTS 55
LED REVERSE FEED SWITCH COMPONENTS 57
HOW TO MAKE USE OF THIS PARTS LIST 59

jintex.in

jintex.in

MACHINE FRAME & MISCELLANEOUS COVER COMPONENTS

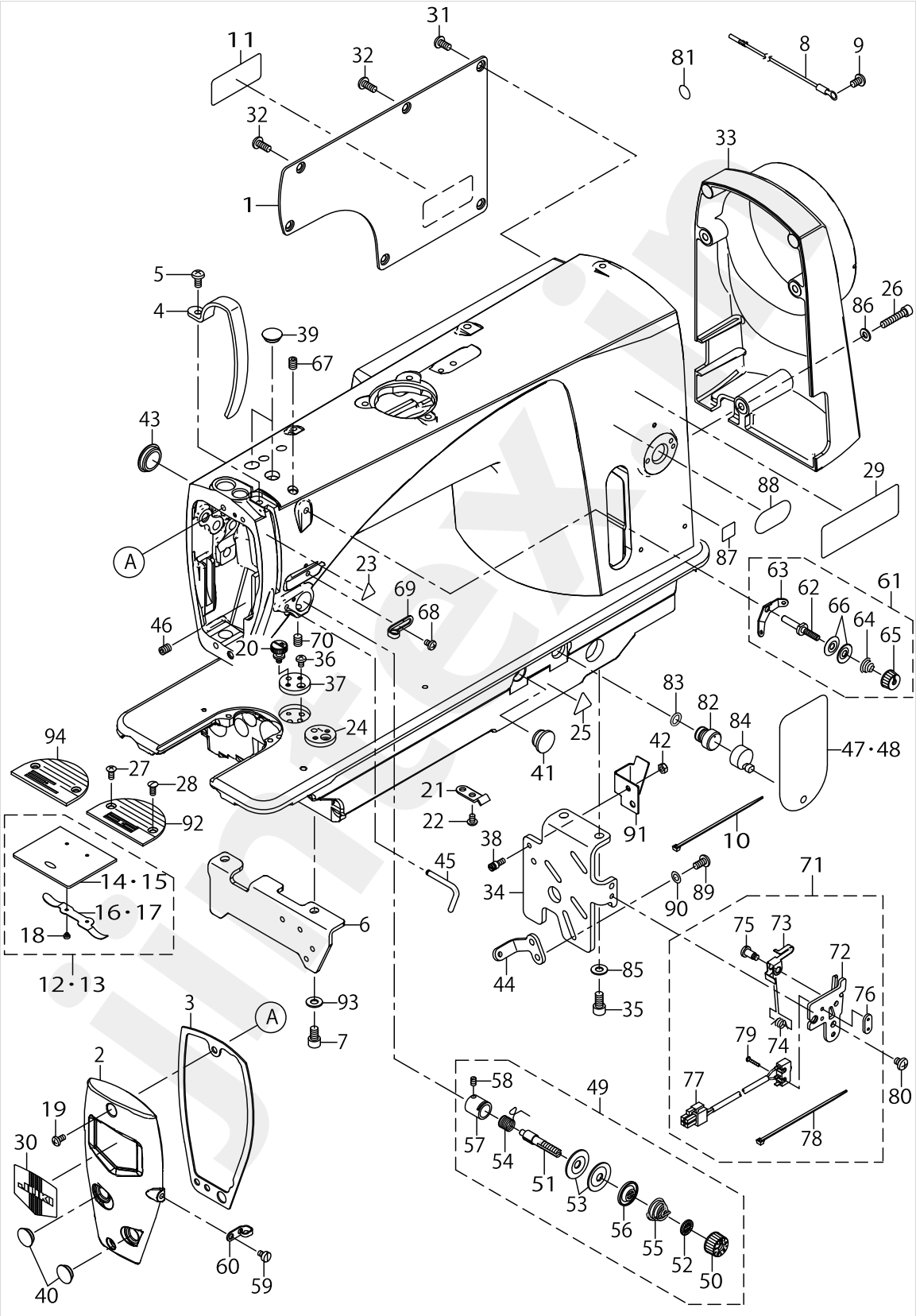

jintex.in

MACHINE FRAME & MISCELLANEOUS COVER COMPONENTS

No.	Parts No.	Parts name	Remarks	Level	Cons	Qty
1	40037158	SIDE PLATE				1
2	40041161	FACE PLATE				1
3	40052819	FACE PLATE PACKING				1
4	23600505	THREAD TAKE-UP LEVER COVER				1
5	SM4051055SP	SCREW				1
6	40086713	BED_STUD_A				1
7	SM6061002TP	SCREW M6 L=10				2
8	22951552	GROUND WIRE ASM.				1
9	SM4050855SP	SCREW				1
10	EA9500B0100	CABLE BAND				1
11	40094561	SEWING MACHINE LABEL (EU)	FOR BB			1
12	22901250	SLIDE PLATE ASM.	FOR BB,EE			1
13	22902753	SLIDE PLATE ASM.	FOR AA,GG			1
14	22901201	SLIDE PLATE		*		1
15	22902704	SLIDE PLATE		*		1
16	22901300	SLIDE PLATE SPRING		*		1
17	22901300	SLIDE PLATE SPRING		*		1
18	SS6060210SP	SCREW 3/32-56 L=1.9		*		2
19	SM4050855SP	SCREW				2
20	40069110	ATTACHMENT FIXATION SCREW	OPTIONAL PARTS			1
21	22944508	WIRE PRESSER A				1
22	SM4040855SP	SCREW				1
23	CM300200001	ATTENTION SEAL				1
24	40069097	RULER PLATE I	OPTIONAL PARTS			1
25	CM300200003	ATTENTION LABEL				1
26	SM6052502TP	SCREW M5X25				3
27	SM2040955TP	SCREW M4 L=8.5				1
28	SM2040750TP	SCREW M4 L=7.4				1
29	CM301300001	SAFETY LABEL				1
30	22902506	FACE PLATE				1
31	SM4051055SP	SCREW				4
32	SM4051255SP	SCREW M5 L=12				2
33	40086732	PULLEY_COVER				1
34	40086714	BED_STUD_B				1
35	SM6061202TP	SCREW M6 L=12				2
36	SM4040655SP	SCREW M4 L=6				1
37	40035589	RULER PLATE				1
38	40091461	FEED LEVER SPRING HOOK				1
39	TA1250406R0	RUBBER PLUG D=12.5 L=4				2
40	TA1250406R0	RUBBER PLUG D=12.5 L=4				2
41	TA1470704R0	RUBBER PLUG				1
42	NM6040001SP	NUT M4X0.7				1
43	TA1250406R0	RUBBER PLUG D=12.5 L=4				1
44	40114043	FEED_ADJUSTING_SPRING_PLATE				1
45	40052933	ARM THREAD GUIDE C				1
46	SM80608A2TP	SCREW M6 L=8				1
47	23640006	SHEET				1

jintex.in

MACHINE FRAME & MISCELLANEOUS COVER COMPONENTS

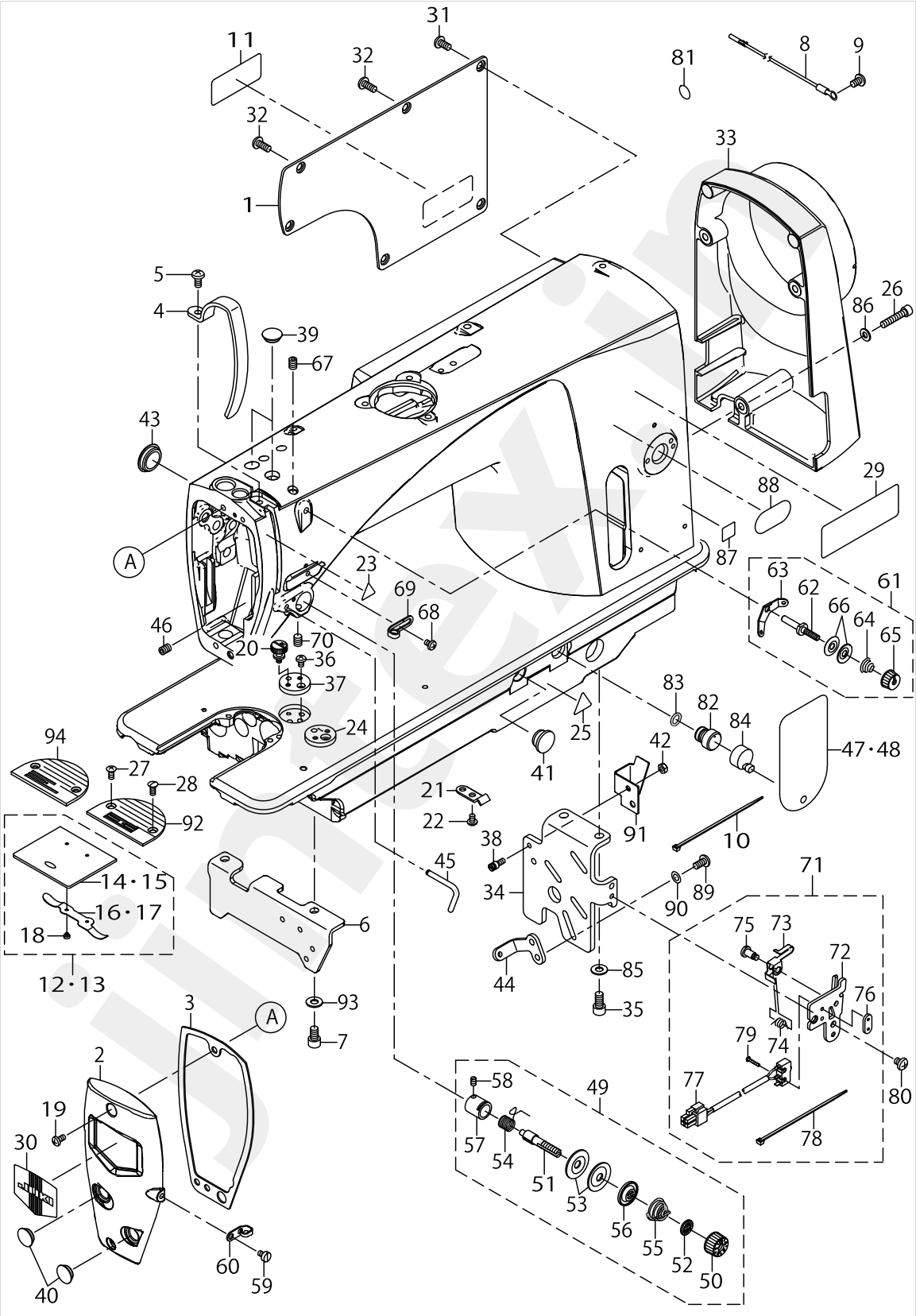

jintex.in

MACHINE FRAME & MISCELLANEOUS COVER COMPONENTS

No.	Parts No.	Parts name	Remarks	Level	Cons	Qty
48	40037488	SHEET	FOR GG			1
49	40086639	THREAD_TENSION_DISK_ASM.				1
50	23626005	THREAD TENSION NUT		*		1
51	22921209	THREAD TENSION POST		*		1
52	22921407	ROTATION STOPPER		*		1
53	22921506	THREAD TENSION DISK		*		2
54	22921605	THREAD TAKE-UP SPRING		*	☆	1
55	22921704	THREAD TENSION SPRING A		*		1
56	22921803	DISK STOPPER		*		1
57	40086640	TENSION_POST_SOCKET_ASM.		*		1
58	SS8090670SP	SCREW 9/64-40 L=5.5		*		1
59	SS6110610TP	SCREW 11/64-40 L=6				1
60	22920607	ARM THREAD GUIDE B				1
61	22963458	THREAD TENSION ASM.				1
62	22945414	THREAD TENSION POST		*		1
63	22945604	THREAD TENSION GUIDE		*		1
64	22963409	THREAD TENSION SPRING		*		1
65	22945703	THREAD TENSION NUT		*		1
66	22945802	THREAD TENSION DISK		*		2
67	SM80608A2TP	L=8SCREW M6 L=8				1
68	SM5040655SN	SCREW				1
69	23626104	ARM THREAD GUIDE A				1
70	SM80608A2TP	L=8SCREW M6 L=8				1
71	40086659	SAFETY_SWITCH_ASM.				1
72	40086660	SAFETY_SWITCH_BASE		*		1
73	23638109	SAFETY SWITCH ARM		*		1
74	23638208	SAFETY SWITCH SPRING		*		1
75	23638307	SAFETY SWITCH ARM SHAFT		*		1
76	23638406	SAFETY SWITCH NUT		*		1
77	40098386	SAFETY_SWITCH_CORD_ASM.		*		1
78	EA9500B0100	CABLE BAND		*		1
79	SM4021201SC	SCREW M2 L=12		*		2
80	SM4050655SP	SCREW M5 L=6				1
81	22901805	GROUND MARK				1
82	23629900	AIR-DISCHARGING				1
83	RO080150200	RUBBER RING				1
84	23601305	AIR-DISCHARGING CAP				1
85	WP0621016SD	WASHER 6.2X13X1				2
86	WP0501016SD	WASHER 5X10.5X1				3
87	CM600100101	WEEE MARK LABEL S	FOR BB			1
88	CM600600101	CHINA ENVIRONMENT LABEL	FOR GG			1
89	SM4051055SP	SCREW				2
90	WP0550800SP	WASHER 5.5X10X0.8				2
91	40091397	CABLE COVER				1
92	40163071	THROAT_PLATE_IB_R	FOR EXPORT			1
93	WP0621016SD	WASHER 6.2X13X1				2
94	11417615	THROAT PLATE A	FOR JAPAN			1

jintex.in

BOBBIN WINDER COMPONENTS

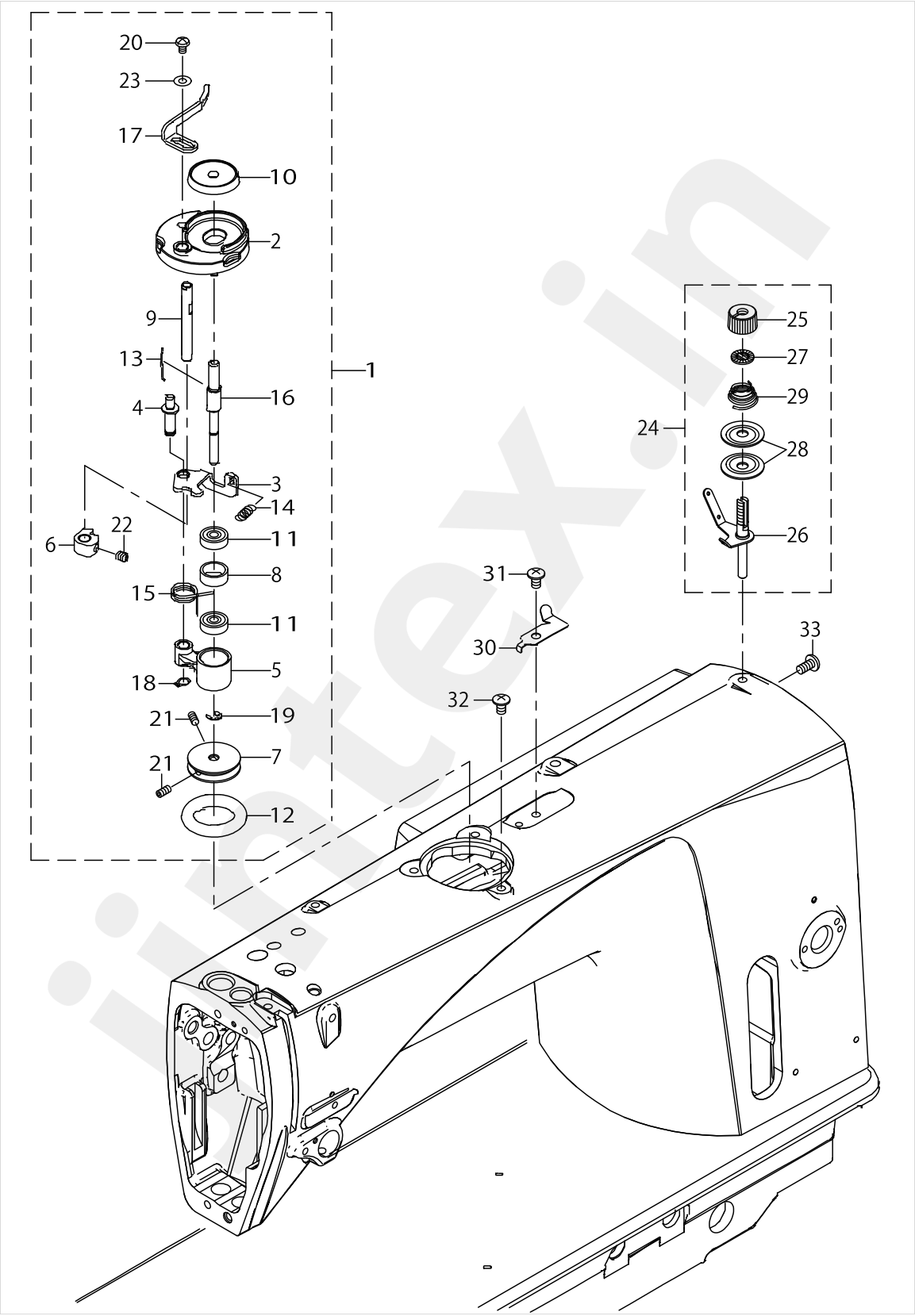

jintex.in

BOBBIN WINDER COMPONENTS

No.	Parts No.	Parts name	Remarks	Level	Cons	Qty
1	40023021	BOBBIN WINDER UNIT				1
2	26260109	BTW_BASE		*		1
3	26260208	BTW_CAM_PLATE		*		1
4	26260307	BTW_BASE_SHAFT		*		1
5	26260406	BTW_SHAFT_BASE		*		1
6	26260505	BTW_CAM_LEVER		*		1
7	26260604	BTW_WHEEL		*		1
8	26260802	BTW_BEARING_SPACER		*		1
9	26261008	BTW_LEVER_SHAFT		*		1
10	26261206	BTW_SPACER		*		1
11	26261305	BTW_BEARING		*		2
12	26261503	BTW_WHEEL_RUBBER		*	☆	1
13	26261602	BOBBIN_SPRING		*	☆	1
14	26261701	BTW_SPRING		*		1
15	40011144	BTW_TORSION_SPRING		*		1
16	40014837	BTW_SHAFT		*		1
17	40023022	BTW LEVER		*		1
18	RC0560711KP	RETAINING RING		*		1
19	RE0400000K0	E-RING 4		*		1
20	SM5040655SN	SCREW		*		1
21	SM8040802TP	SCREW M4X8		*		2
22	SM8050502TP	SCREW M5 L=5		*		1
23	WP0450826SC	WASHER 4.5X10X0.8		*		1
24	40088958	BOBBIN THREAD TENSION ASM.				1
25	22921308	THREAD TENSION NUT		*		1
26	40088959	BOBBIN THREAD TENSION ROD ASM.		*		1
27	22921407	ROTATION STOPPER		*		1
28	22921506	THREAD TENSION DISK		*		2
29	22921704	THREAD TENSION SPRING A		*		1
30	40037008	THREAD_CUTTER			☆	1
31	SM0050801SC	SCREW				1
32	SM0050801SC	SCREW				3
33	SM4051055SP	SCREW				1

jintex.in

MAIN SHAFT & NEEDLE BAR COMPONENTS

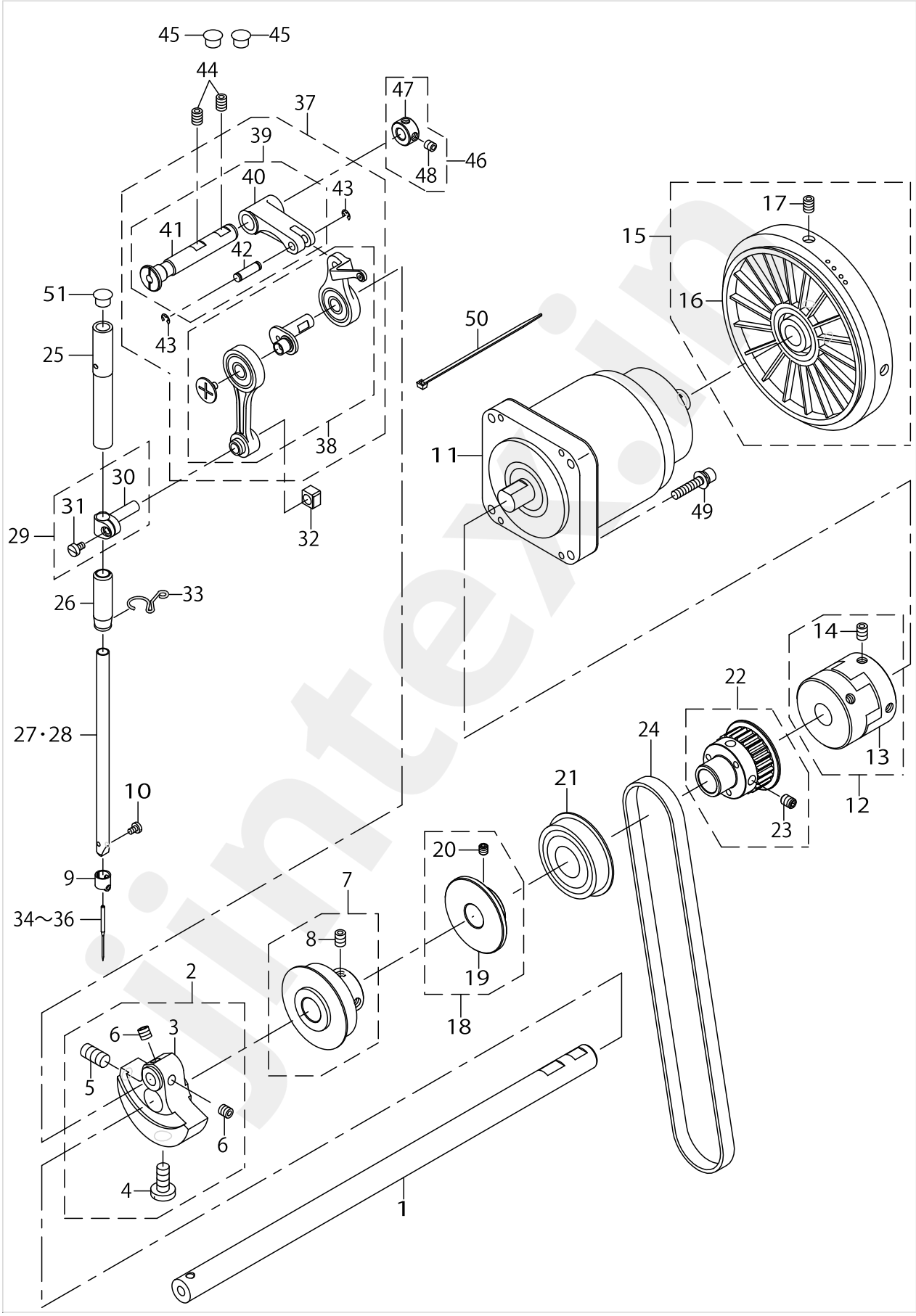

MAIN SHAFT & NEEDLE BAR COMPONENTS

No.	Parts No.	Parts name	Remarks	Level	Cons	Qty
1	40086597	MAIN_SHAFT				1
2	40135904	ASSY_COUNTER WEIGHT				1
3	40135916	COUNTER WEIGHT		*		1
4	40004171	COUNTER_WEIGHT_SCREW		*		1
5	SM8081652TP	SCREW M8 L=16		*		1
6	SM80606A2TP	6SCREW M6 L=6		*		2
7	40150011	FRONT_BEARING				1
8	SM80608A2TP	SCREW M6 L=8		*		2
9	22906309	NEEDLE BAR THREAD GUIDE				1
10	SS7080510TP	SCREW 1/8-44 L=4.5			☆	1
11	40089196	AC SERVO MOTOR				1
12	40051473	COUPLING ASM.				1
13	40051474	COUPLING		*		1
14	SM80608A2TP	SCREW M6 L=8		*		4
15	40037007	HAND WHEEL ASM.				1
16	40037006	HAND WHEEL		*		1
17	SM80608A2TP	SCREW M6 L=8		*		2
18	40136292	BTW_DRIVING_WHEEL_ASM				1
19	40136293	BTW_DRIVING_WHEEL		*		1
20	SM80506A2TP	SCREW M5 L=6		*		2
21	SB120002700	BEARING				1
22	40141440	UPPER SPROCKET ASM.				1
23	SM80608A2TP	SCREW M6 L=8		*		2
24	40086731	TIMING_BELT_550				1
25	23608003	NEEDLE BAR METAL UPPER				1
26	40107707	NEEDLE_BAR_METAL_LOWER				1
27	22886907	NEEDLE BAR (A)	FOR EE,AA,GG			1
28	22887004	NEEDLE BAR (B)	FOR BB			1
29	22906457	NEEDLE BAR HOLDER ASM.				1
30	22906408	NEEDLE ROD HOLDER		*		1
31	SS6090670TP	SCREW 9/64-40 L=6		*		1
32	40090058	SLIDE BLOCK				1
33	23626203	NEEDLE BAR THREAD GUIDE				1
34	MDB100B1100	NEEDLE DBX1 #11	FOR EE,AA		☆	1
35	MC200500750	NEEDLE 134 NM75	FOR BB		☆	1
36	MDB100B1400	NEEDLE DBX1 #14	FOR GG		☆	1
37	40135900	THREAD TAKE UP COMPL.				1
38	40135905	THREAD_TAKE_UP_ASM._C		*		1
39	40141165	TAKE_UP_CRANK_ASM		*		1
40	40135906	TAKE_UP_CRANK		*		1
41	40143184	TAKE_UP_CRANK_SHAFT		*		1
42	40135907	THREAD_TAKE_UP_PIN		*		1
43	RE0300000K0	E-RING 3		*		2
44	SM80608A2TP	SCREW M6 L=8				2
45	TA0850604R0	RUBBER PLUG				2
46	40032269	THRUST COLLAR				1
47	CS1000881TP	THRUST COLLAR		*		1

jintex.in

MAIN SHAFT & NEEDLE BAR COMPONENTS

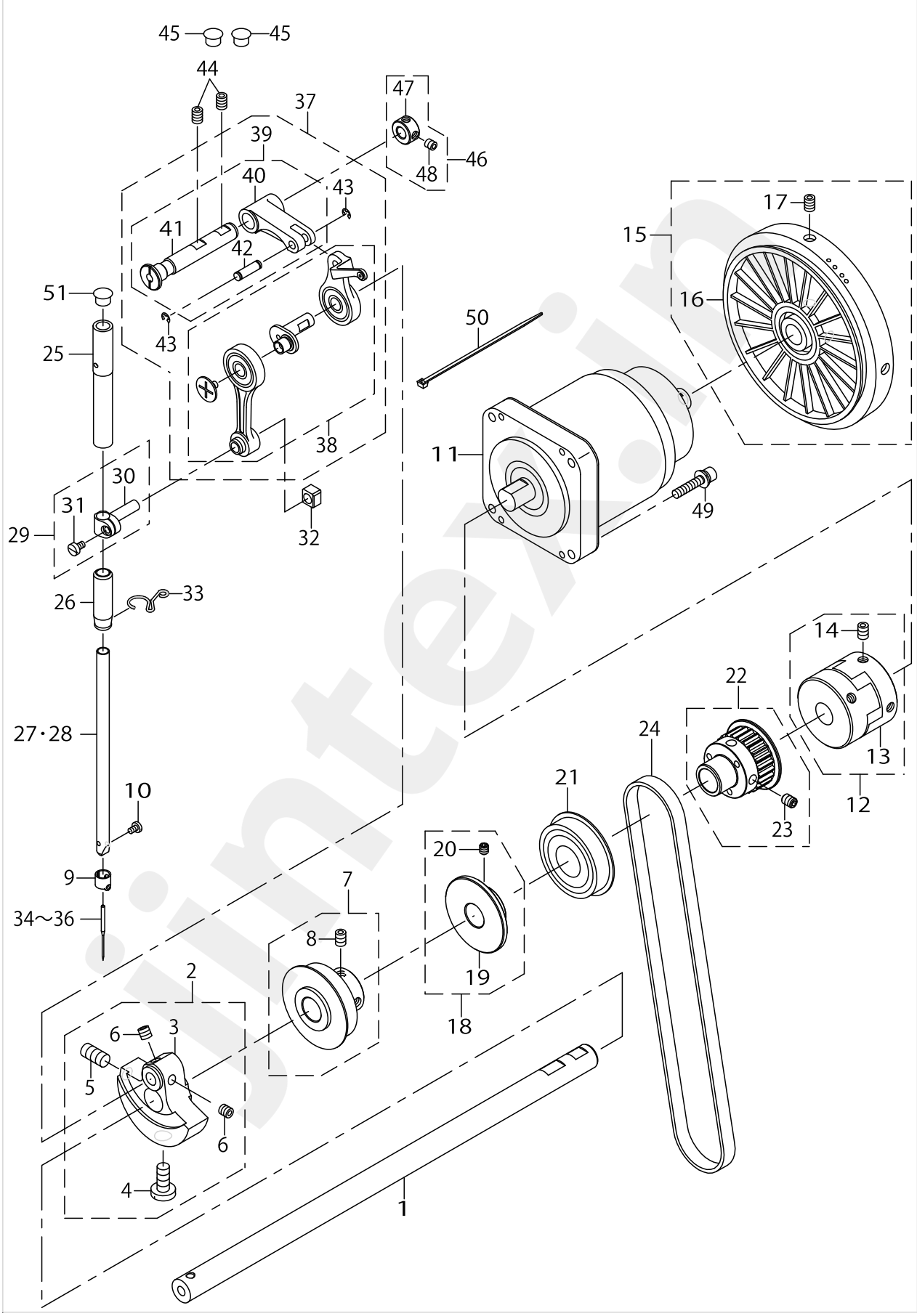

jintex.in

MAIN SHAFT & NEEDLE BAR COMPONENTS

No.	Parts No.	Parts name	Remarks	Level	Cons	Qty
48	SM8050412TP	SCREW M5 L=4		*		2
49	SL6052592TN	BOLT				4
50	EA9500B0100	CABLE BAND				2
51	TA0850604R0	RUBBER PLUG				1

jintex.in

jintex.in

HAND LIFTER & TENSION RELEASE COMPONENTS

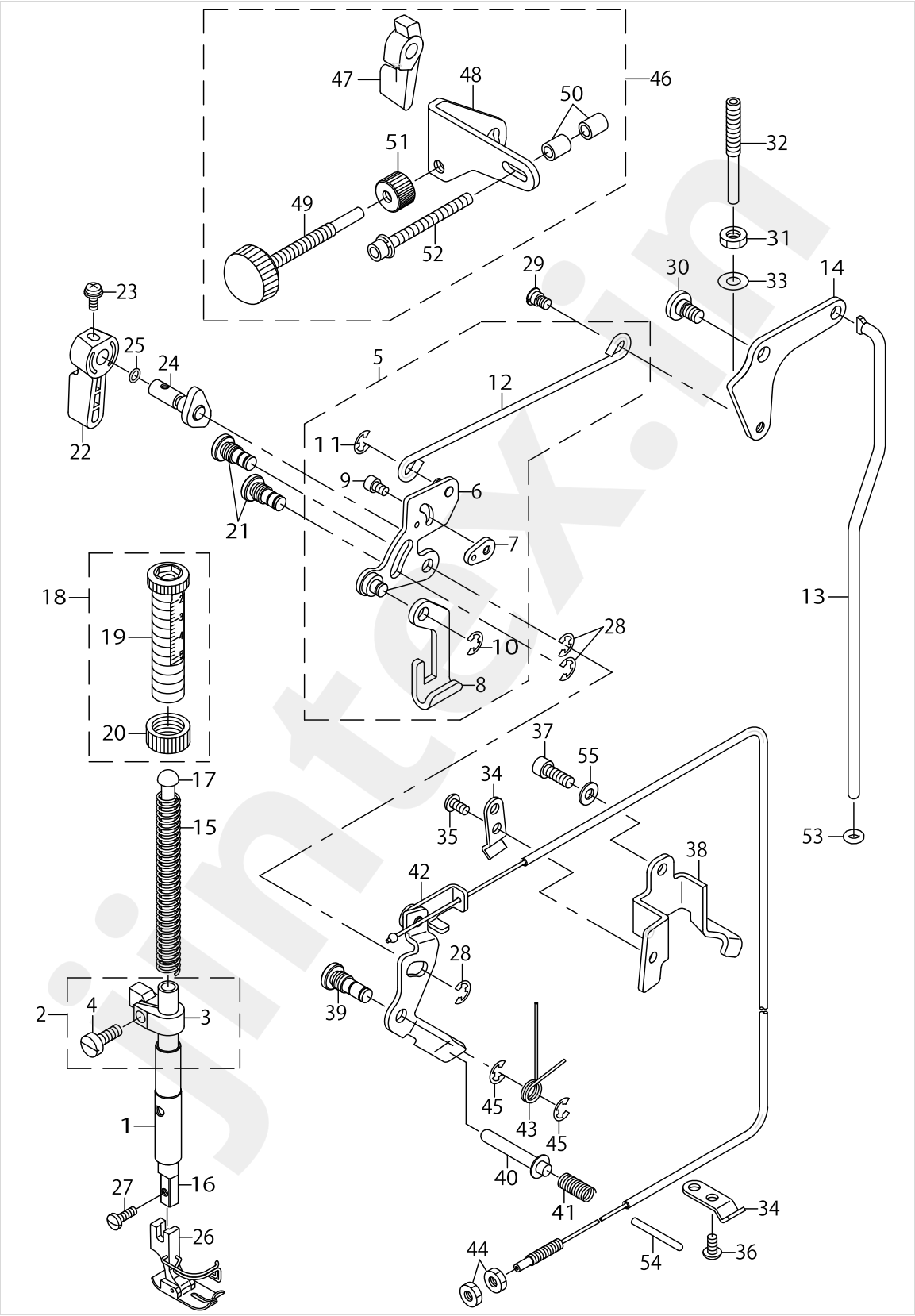

HAND LIFTER & TENSION RELEASE COMPONENTS

No.	Parts No.	Parts name	Remarks	Level	Cons	Qty
1	40136700	PRESSER_BAR_BUSHING				1
2	40086606	PRESSER_BAR_GUIDE_BRACKET_ASM.				1
3	40086607	PRESSER_BAR_GUIDE_BRACKET		*		1
4	SM6051400SP	SCREW		*		1
5	23609357	LIFTING LEVER CONNECT ROD ASM.				1
6	23609456	LIFTING LINK COMPL.		*		1
7	23609605	PLATE		*		1
8	22908008	LIFTING PLATE		*		1
9	SM6040602TP	SCREW M4 L=6		*		1
10	RE0500000K0	E-RING		*		1
11	RE0500000K0	E-RING		*		1
12	23609308	LIFTING LEVER CONNECT ROD		*		1
13	40086760	CONNECTING ROD				1
14	23609704	LIFTING LEVER LINK				1
15	22907406	PRESSER SPRING				1
16	23610207	PRESSER BAR				1
17	23610306	PRESSER GUIDE BAR				1
18	40037359	PRESSER SPRING REGURATOR ASM.				1
19	40037141	PRESSER SPRING REGULATOR		*		1
20	40037144	PRESSER SPRING REGULATOR NUT		*		1
21	40050583	LINK SHAFT				2
22	22907802	HAND LIFTER				1
23	B1521555000	SCREW				1
24	22908552	HAND LIFTER CAM ASM.				1
25	RO037180100	RUBBER RING				1
26	B15240120BA	PRESSER FOOT ASM.				1
27	SS7091110TP	SCREW 9/64-40 L=10.5				1
28	RE0500000K0	E-RING				3
29	22908909	HINGE SCREW				1
30	40082078	SHOULDER SCREW D=7.24 H=3.3				1
31	NM6060003SE	NUT FOR BRACKET				1
32	40036706	ADJUSTING SCREW				1
33	WP0621016SD	WASHER 6.2X13X1				1
34	22944508	WIRE PRESSER A				2
35	SM4040855SP	SCREW				1
36	SM4040855SP	SCREW				1
37	SM6051402TP	SCREW M5X0.8 L=14				1
38	40086643	WIRE_HOLDER				1
39	40050582	TENSION RELEASE SHAFT				1
40	22920300	THREAD RELEASE SUPPORTING PIN				1
41	22920409	THREAD RELEASE PIN SPRING				1
42	23626351	THREAD TENSION RELEASE WIRE				1
43	23626807	TENSION RELEASE RETURN SPRING				1
44	NS6620310SP	NUT 3/16-32				2
45	RE0500000K0	E-RING				2
46	40056622	MINUTE LIFTING DEVICE ASM.	OPTIONAL PARTS			1
47	23611106	HAND LIFTER		*		1

jintex.in

HAND LIFTER & TENSION RELEASE COMPONENTS

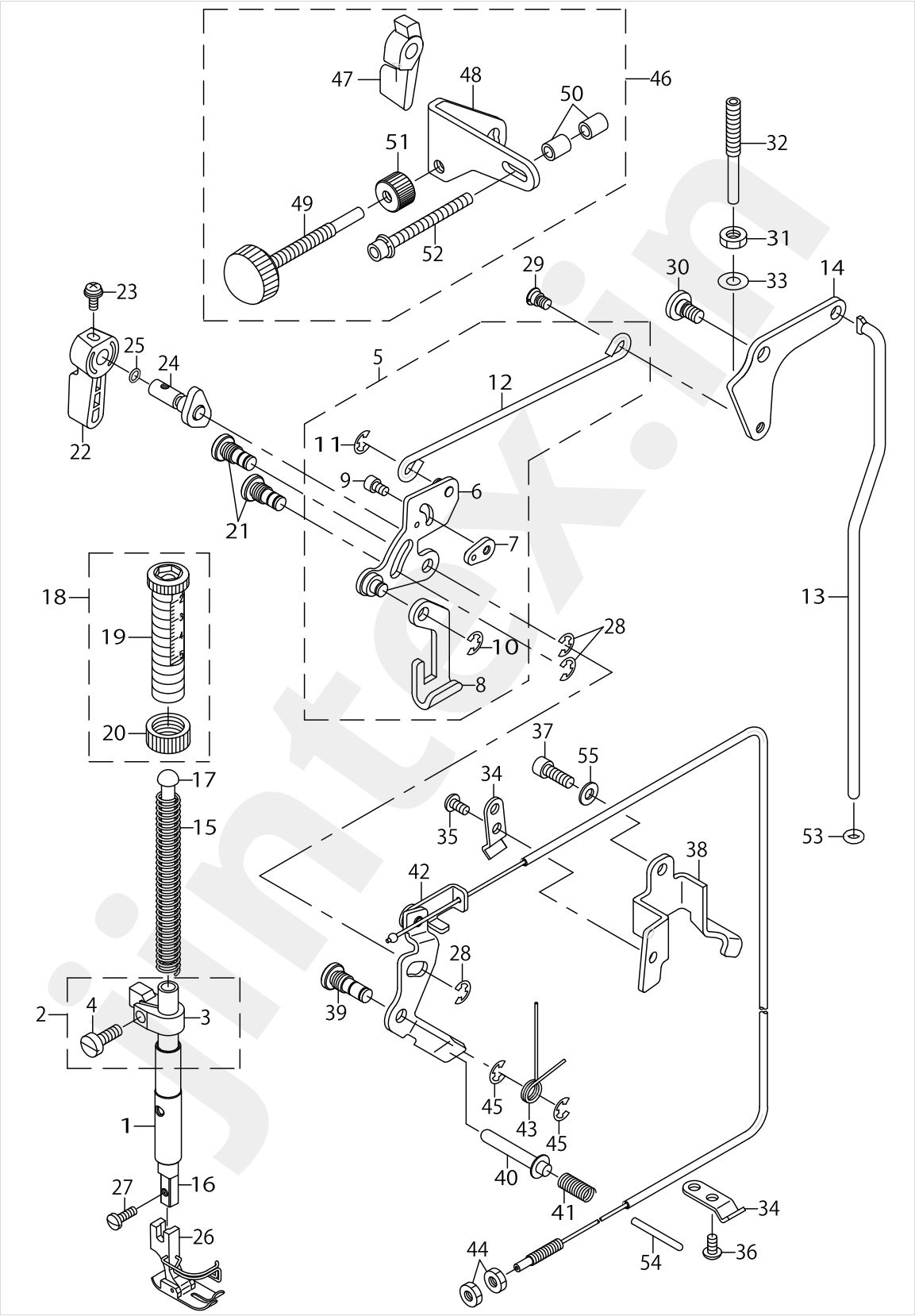

jintex.in

HAND LIFTER & TENSION RELEASE COMPONENTS

No.	Parts No.	Parts name	Remarks	Level	Cons	Qty
48	23610504	STOPPER BASE		*		1
49	23610652	STOPPER SCREW ASM.		*		1
50	D5119206K0K	SPACER		*		2
51	23610702	STOPPER SCREW NUT		*		1
52	SL6053592TN	BOLT		*		1
53	RO044240100	RUBBER RING				1
54	B3118552F00	TENSION RELEASING PIN				1
55	WP0501016SD	WASHER 5X10.5X1				1

jintex.in

jintex.in

FEED ADJUST MECHANISM COMPONENTS

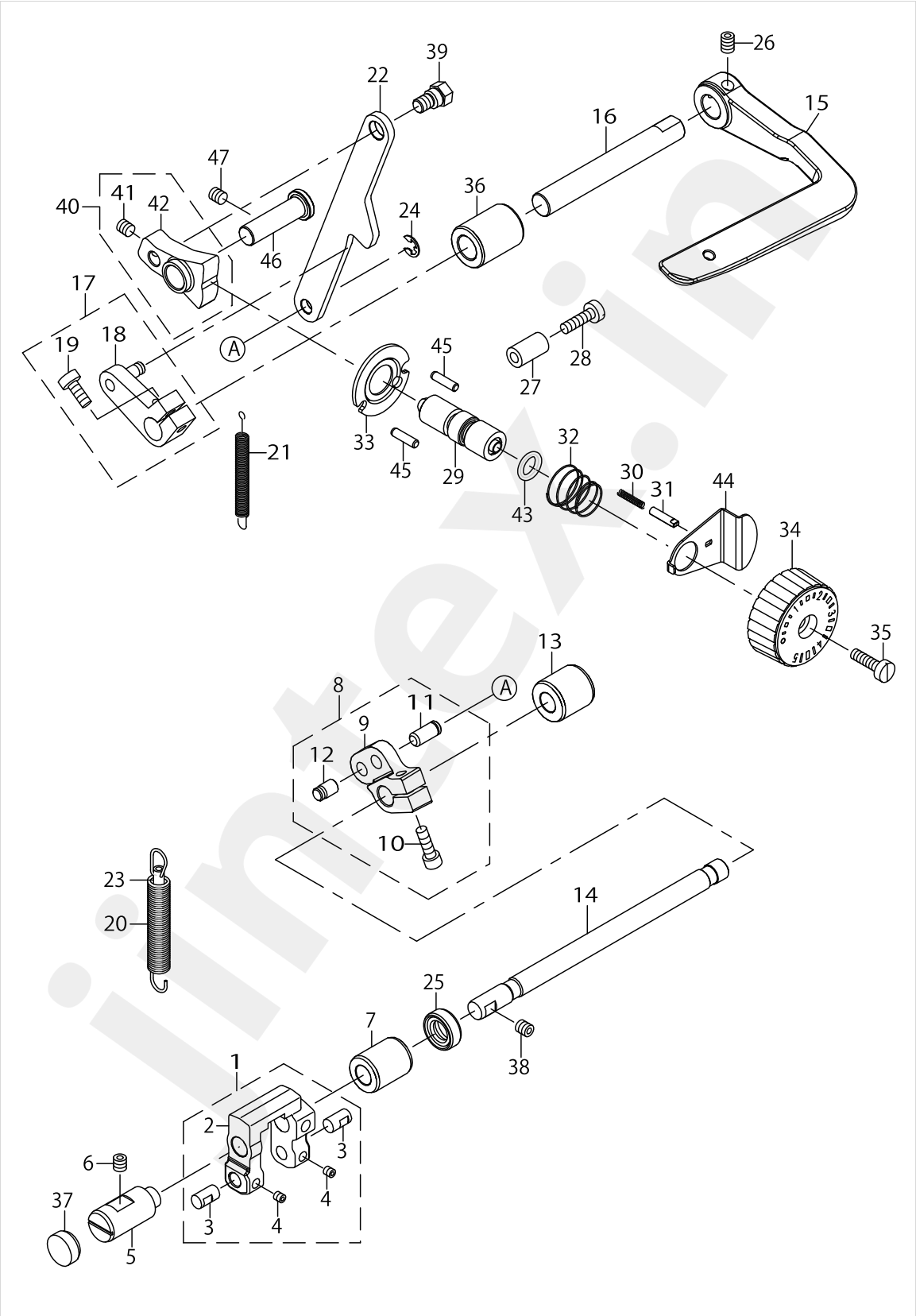

FEED ADJUST MECHANISM COMPONENTS

No.	Parts No.	Parts name	Remarks	Level	Cons	Qty
1	40086735	ADJUSTING_LINK_ASM.				1
2	40086695	FEED_ADJUSTING_LINK		*		1
3	40086696	FEED_ADJUSTING_LINK_PIN		*		2
4	SM80506A2TP	SCREW M5 L=6		*		2
5	40086608	ADJUSTING_LINK_FULCRUM_SHAFT				1
6	SM80606A2TP	SCREW M6 L=6				1
7	40086615	FEED_CHANGING_SHAFT_METAL_A				1
8	40086704	FEED_CHANGING_SHAFT_ARM_ASM.				1
9	40086705	FEED_CHANGING_SHAFT_ARM		*		1
10	SM6051602TP	SCREW M5X0.8 L=16		*		1
11	22910509	FEED ADJUSTING LINK PIN		*		1
12	40086706	FEED_CHANGING_SPRING_PIN		*		1
13	40086616	FEED_CHANGING_SHAFT_METAL_B				1
14	40086614	FEED_CHANGING_SHAFT				1
15	40086738	REVERSE_FEED_LEVER				1
16	23613706	FEED LEVER SHAFT				1
17	40086674	FEED_LEVER_ARM_ASM.				1
18	40086675	FEED_LEVER_ARM		*		1
19	SM6051602TP	SCREW M5X0.8 L=16		*		1
20	40086737	FEED ADJUSTING SPRING				1
21	40086739	FEED LEVER SPRING				1
22	40086609	FEED_ADJUSTING_ROD				1
23	23630007	TUBE				0.1
24	RE0500000K0	E-RING				1
25	23612609	FEED CHANGING SHAFT OIL SEAL				1
26	SM80608A2TP	SCREW M6 L=8				2
27	22952501	BACK LEVER STOPPER				1
28	SM6051850TP	SCREW M5 L=18				1
29	40141842	FEED REGULATOR SCREW				1
30	40123098	FEED_REGULATOR_PIN_SPRING				1
31	40161440	FEED_REGULATOR_PIN				1
32	40141840	REGULATOR STOPPER SPRING				1
33	40141838	FEED REGULATOR WASHER				1
34	40141841	REGULATOR PIN DIAL				1
35	SS6121860SP	SCREW 3/16-28 L=18				1
36	40086617	FEED_LEVER_SHAFT_METAL				1
37	40086736	RUBBER PLUG				1
38	SM80606A2TP	SCREW M6 L=6				1
39	23613409	FEED ADJUSTING PIN				1
40	40095847	FEED REGULATOR ASM.				1
41	SM80606A2TP	SCREW M6 L=6		*		1
42	40122891	FEED_REGULATOR		*		1
43	RO092270200	RUBBER RING				1
44	40161441	REGULATOR_PIN_STOPPER				1
45	40086613	FEED_REGULATOR_STOPPER_PIN				2
46	40006716	THREAD_TRIMMER_SHAFT				1
47	SM80606A2TP	SCREW M6 L=6				1

jintex.in

HORIZONTAL FEED, VERTICAL FEED & HOOK DRIVING SHAFT COMPONENTS

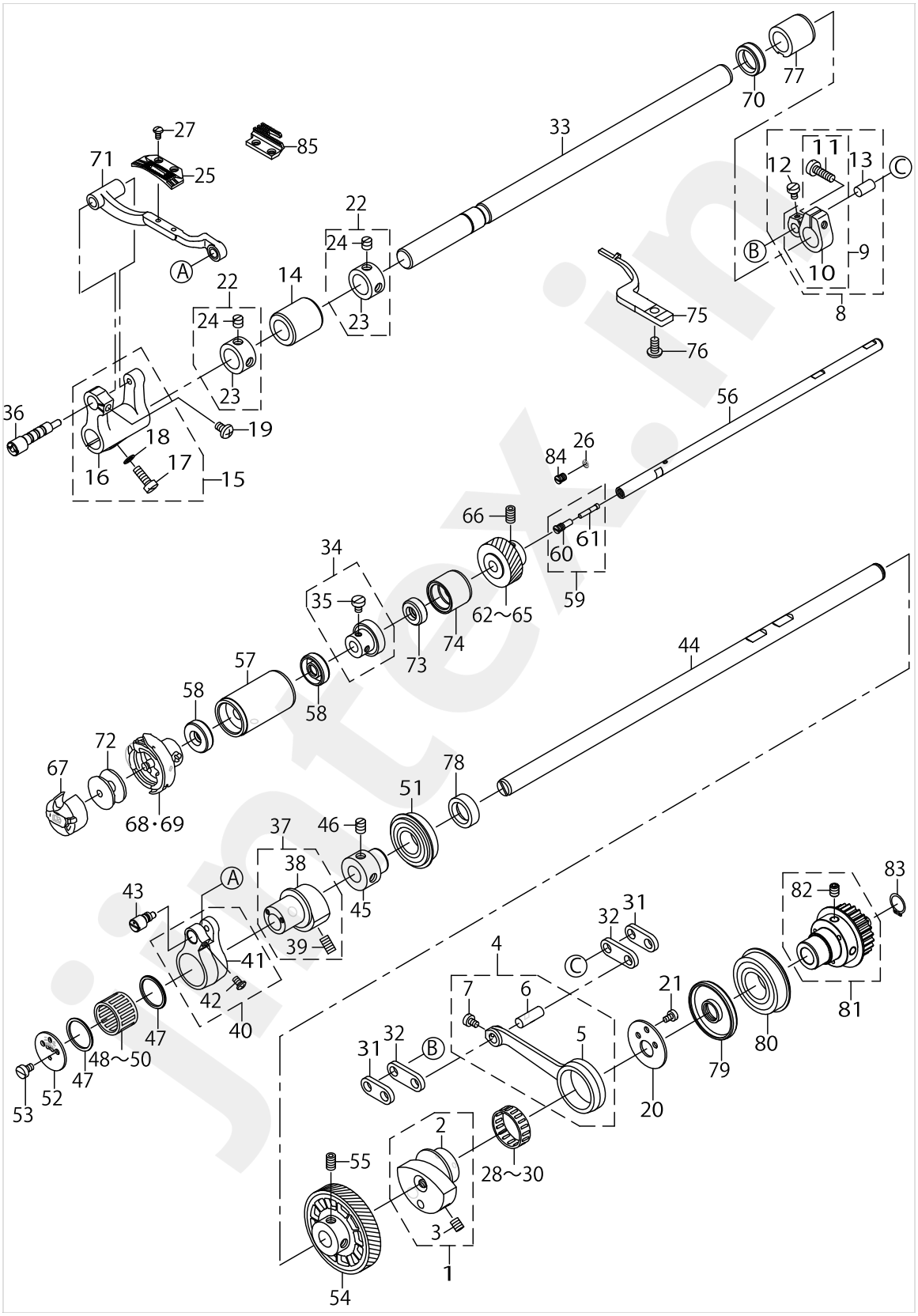

jintex.in

HORIZONTAL FEED, VERTICAL FEED & HOOK DRIVING SHAFT COMPONENTS

No.	Parts No.	Parts name	Remarks	Level	Cons	Qty
1	40037192	FEED ROCKER CAM ASM.				1
2	23616006	FEED ROCKER CAM		*		1
3	SS8150822TP	SCREW 15/64-28 L=8		*		2
4	40037365	FEED ROCKER ROD ASM.				1
5	40026277	FEED ROCKER ROD		*		1
6	22911101	WALKING FOOT PIN C		*		1
7	SS6090620TP	SCREW		*		1
8	40061246	FEED ROCKER ARM ALL ASM.				1
9	40058504	FEED ROCKER ARM ASM.		*		1
10	40042079	FEED ROCKER ARM		*		1
11	SS6121610SP	SCREW 3/16-28 L=15.5		*		1
12	SS6090620TP	SCREW		*		1
13	22911002	WALKING FOOT PIN B		*		1
14	23616709	FEED ROCKER SHAFT METAL				1
15	40037005	ASSY_FEED_ROCKER_BASE_ARM				1
16	40026281	FEED ROCKER BASE ARM		*		1
17	SM6051400SP	SCREW		*		1
18	WP0480856SP	WASHER 4.8X8.4X0.8		*		1
19	SM4050855SP	SCREW				1
20	23616204	FEED ROCKER CAM PLATE				1
21	SS6090670TP	SCREW 9/64-40 L=6				2
22	22904155	MAIN SHAFT THRUST COLLAR ASM.				2
23	22904106	MAIN SHAFT THRUST COLLAR		*		1
24	SS8660610TP	SCREW 1/4-40 L=6		*		2
25	40164902	FEED_DOG_I_ST	FOR EXPORT			1
26	RO036080200	RUBBER RING	OPTIONAL PARTS			1
27	SS4080620TP	SCREW 1/8-44 L=6				2
28	B412352200A	NEEDLE BEARING	SELECTIVE PARTS			1
29	B412352200B	NEEDLE ROLLAR	SELECTIVE PARTS			1
30	B412352200C	NEEDLE ROLLAR	SELECTIVE PARTS			1
31	40026278	CONNECTING LINK A				2
32	23616402	CONNECTING LINK B				2
33	23616600	FEED ROCKER SHAFT				1
34	40086743	BEARING SUPPORT ASM.				1
35	SS6110710TP	SCREW 11/64-40 L=6.5		*		2
36	40026282	FEED ROCKER BASE SHAFT				1
37	40000391	VERTICAL FEED CAM ASM. 5				1
38	40000392	VERTICAL FEED CAM 5		*		1
39	SS8151150TP	SCREW 15/64-28 L=10.5		*		2
40	40053720	FEED DRIVING BASE ARM ASM.				1
41	40026287	FEED DRIVING BASE ARM		*		1
42	SM4040655SP	SCREW M4 L=6		*		1
43	40026288	FEED DRIVING BASE SHAFT				1
44	40086757	FEED DRIVING SHAFT				1
45	40086690	FEED_DRIVING_BEARING_SUPPORT				1
46	SS8661012TP	SCREW				2
47	23618101	FEED DRIVING CAM THRUST BUSH				2

jintex.in

HORIZONTAL FEED, VERTICAL FEED & HOOK DRIVING SHAFT COMPONENTS

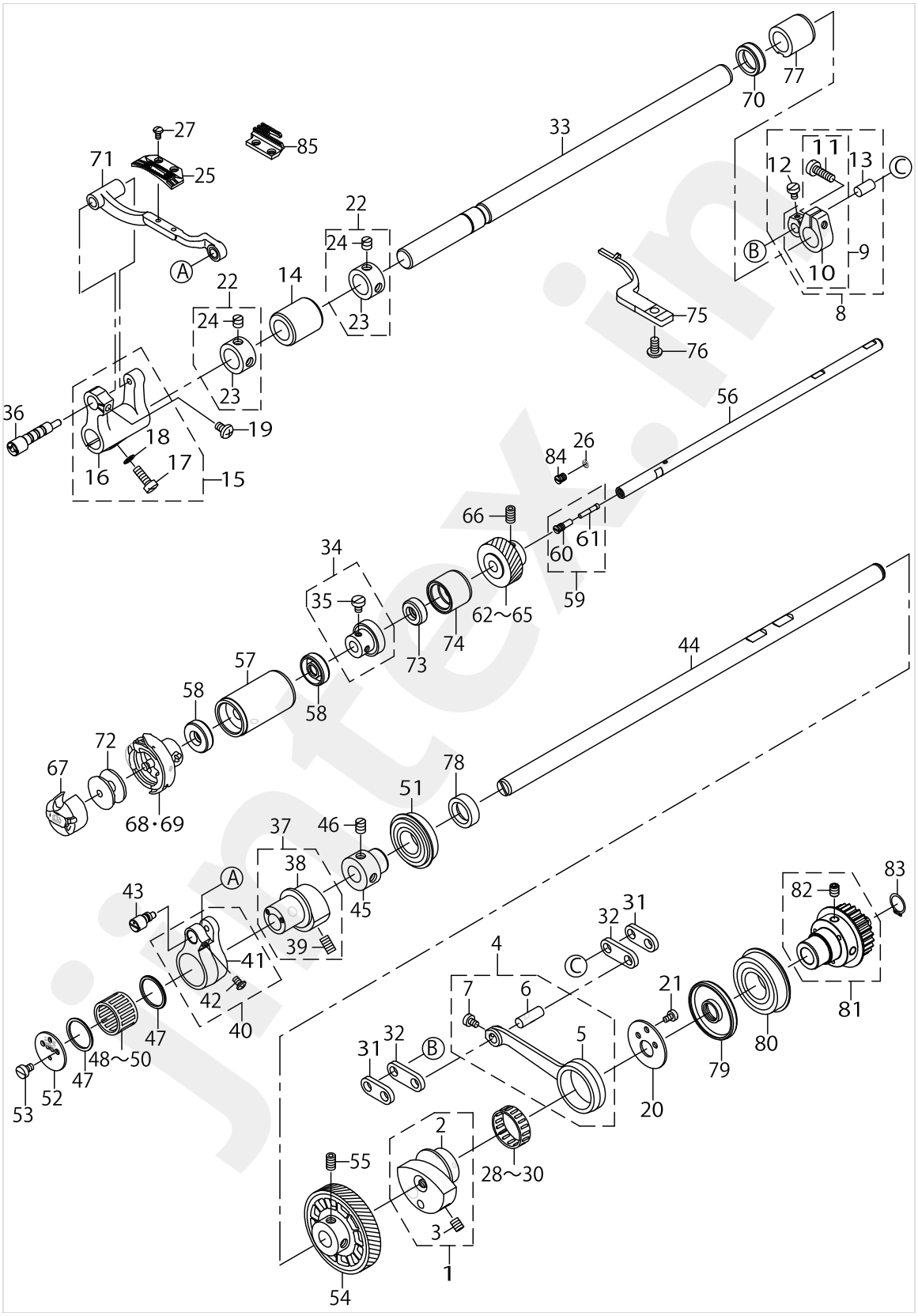

HORIZONTAL FEED, VERTICAL FEED & HOOK DRIVING SHAFT COMPONENTS

No.	Parts No.	Parts name	Remarks	Level	Cons	Qty
48	SB32000060A	BEARING	SELECTIVE PARTS			1
49	SB32000060B	BEARING	SELECTIVE PARTS			1
50	SB32000060C	BEARING	SELECTIVE PARTS			1
51	SB117001200	BEARING				1
52	23618309	FEED DRIVING CAM PLATE				1
53	SS6090670TP	SCREW 9/64-40 L=6				2
54	23620503	GEAR (LARGE)				1
55	SS8661012TP	SCREW				2
56	23620008	HOOK SHAFT				1
57	23620156	HOOK SHAFT METAL COMPL.				1
58	40145927	OIL SEAL				2
59	22916555	OIL SEAL SCREW ASM.				1
60	22916506	SET SCREW		*		1
61	11015906	OIL WICK		*		1
62	23620701	GEAR (SMALL)(A)	SELECTIVE PARTS			1
63	23620800	GEAR (SMALL)(B)	SELECTIVE PARTS			1
64	23620909	GEAR (SMALL)(C)	SELECTIVE PARTS			1
65	23621006	GEAR (SMALL)(D)	SELECTIVE PARTS			1
66	SS8661012TP	SCREW				2
67	11038759	BOBBIN CASE ASM.			☆	1
68	11141355	HOOK ASM.	FOR BB		☆	1
69	11038650	HOOK ASM.	FOR AA,EE,GG		☆	1
70	40086740	OIL SEAL				1
71	40030786	FEED BASE COMPL.				1
72	22964001	BOBBIN A			☆	1
73	40086744	HOOK DRIVING SHAFT OIL SEAL				1
74	23620404	HOOK SHAFT REAR METAL				1
75	40089607	INNER_HOOK_HOLDER				1
76	SM4051055SP	SCREW				1
77	40086618	FEED_SHAFT_REAR_METAL				1
78	40086741	OIL SEAL				1
79	40086742	OIL SEAL				1
80	SB120001800	BEARING				1
81	40141443	UNDER SPROCKET ASM.				1
82	SM80608A2TP	SCREW M6 L=8		*		2
83	RC1200001KP	C-SHAPED SNAP RING				1
84	11079506	FRONT SCREW	OPTIONAL PARTS			1
85	11417714	FEED_DOG_A	FOR JAPAN			1

jintex.in

THREAD TRIMMER COMPONENTS (1)

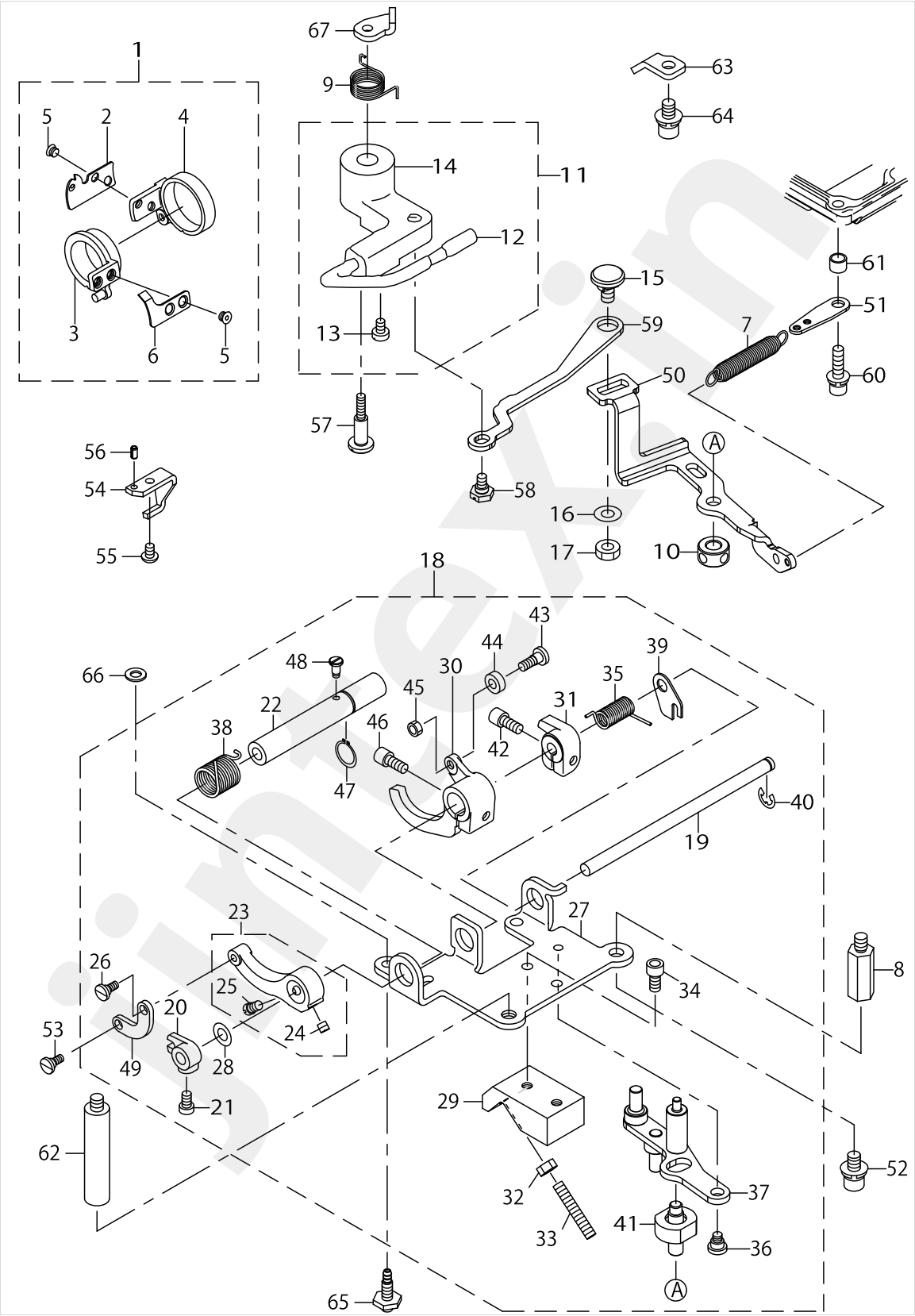

jintex.in

THREAD TRIMMER COMPONENTS (1)

No.	Parts No.	Parts name	Remarks	Level	Cons	Qty
1	40067412	KNIFE UNIT				1
2	11497302	THREAD HAUL KNIFE		*	☆	1
3	40067413	KNIFE BASE ASM.		*		1
4	11497104	LOOP SPREADING BASE		*		1
5	11420601	SCREW		*		4
6	11420106	THREAD CUTTER KNIFE		*	☆	1
7	11091204	ADJUST LINK SPRING				1
8	40016706	OIL_TANK_STUD_B				1
9	40029398	PICKER SPRING				1
10	40010434	THRUST_COLLAR_ASM				1
11	40066590	ASSY PICKER ARM				1
12	40036997	ASSY_PICKER		*		1
13	SS6090670TP	SCREW 9/64-40 L=6		*		2
14	40066591	PICKER ARM		*		1
15	22950000	PICKER LINK PIN				1
16	WP0621016SH	WASHER				1
17	NS6150310SP	NUT 15/64-28				1
18	40113199	THREAD_CUTTER_DRIVING_UNIT_MS_PBN				1
19	11420700	THREAD CUTTER KNIFE SHAFT		*		1
20	11421500	KNIFE DRIVING ARM		*		1
21	SS7110740TP	SCREW 11/64-40 L=7		*		1
22	11420809	LOOP SPREADING SHAFT		*		1
23	40060792	LOOP SPREADING ARM ASM.		*		1
24	SS8110410TP	SCREW 11/64-40 L=3.5		*		1
25	SS6110710TP	SCREW 11/64-40 L=6.5		*		1
26	SD0500251SP	HINGE SCREW D=5 H=2.5		*		1
27	40113200	BASE_PLATE_MS_PBN		*		1
28	WP0651056SH	WASHER 6.5X11X1		*		1
29	40060799	STOPPER BLOCK		*		1
30	11421104	LOOP SPREADING ARM		*		1
31	11421203	KNIFE DRIVING STITCH TONGUE		*		1
32	NM6050001SD	NUT M5X0.8		*		2
33	SM8053002TP	SCREW M5 L=30		*		2
34	SM6051002TP	SCREW M5X0.8 L=10		*		2
35	40062180	KNIFE RETURN SPRING		*		1
36	SD0640321TP	HINGE SCREW D=6.35 H=3.2		*		1
37	40082582	CLUTCH PLATE ASM.		*		1
38	40066592	LOOP SPREAD SPRING		*		1
39	11421708	SPRING HOOK		*		1
40	RE0500000K0	E-RING		*		1
41	40082588	CLUTCH PLATE SHAFT		*		1
42	SS6621212TP	SCREW 3/16-32 L=12.0		*		1
43	SD0500402SP	HINGE SCREW D=5 H=4		*		1
44	D2422530D00	CAM ROLLER		*		1
45	NS6110310SP	NUT 11/64-40		*		1
46	SS6621212TP	SCREW 3/16-32 L=12.0		*		1
47	RC1200001KP	C-SHAPED SNAP RING		*		1

jintex.in

THREAD TRIMMER COMPONENTS (1)

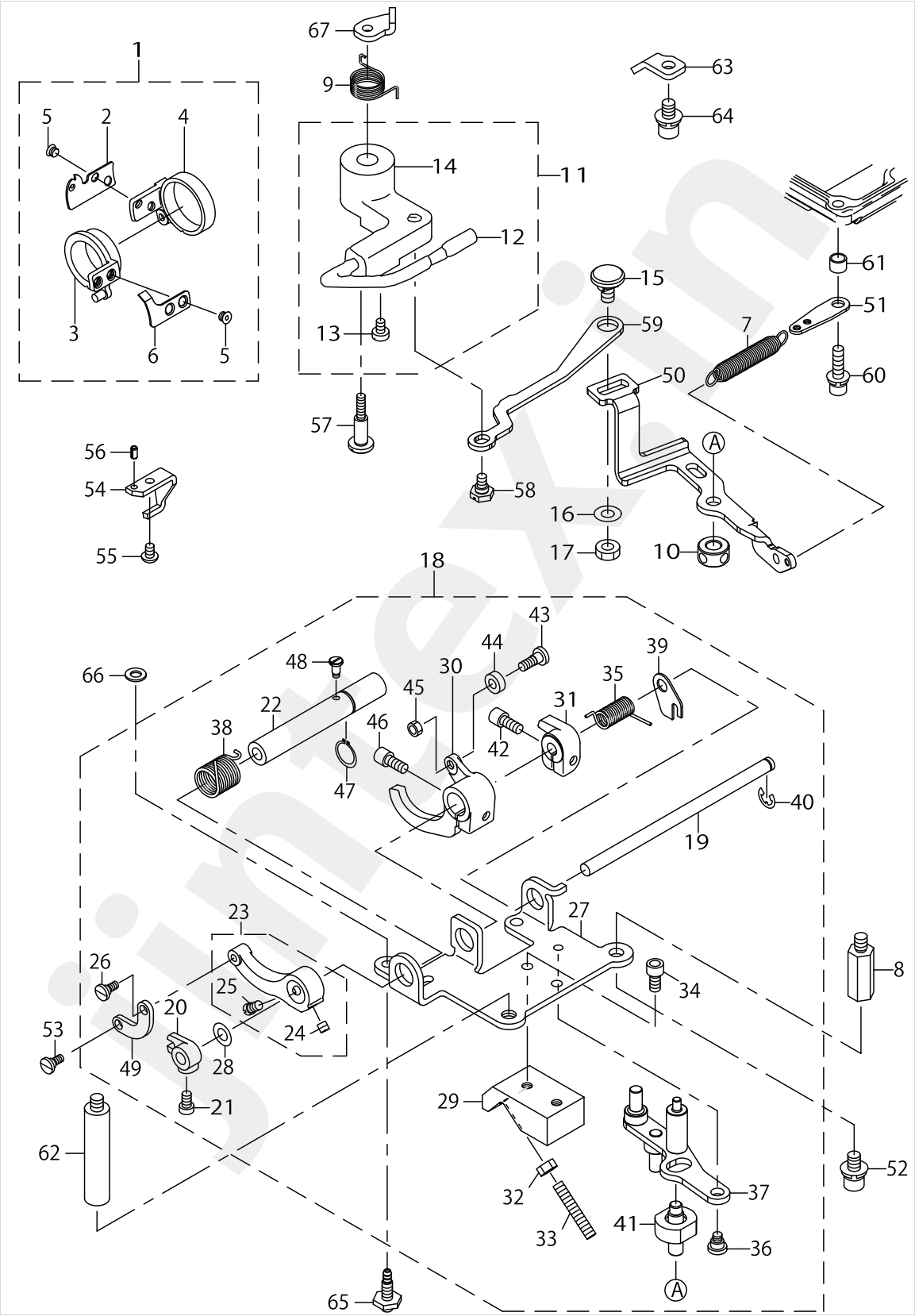

jintex.in

THREAD TRIMMER COMPONENTS (1)

No.	Parts No.	Parts name	Remarks	Level	Cons	Qty
48	SD0380551SL	HINGE SCREW D=3.80 H=5.5		*		1
49	11421401	LOOP SPREADING CONNECTING LINK		*		1
50	40082583	TENSION RELEASING LEVER				1
51	40082585	LEVER SPRING HOOK				1
52	SL6061292TN	SCREW				2
53	SD0500251SP	HINGE SCREW D=5 H=2.5				1
54	40066602	KNIFE DRIVING ARM STOPPER				1
55	SM4040655SP	SCREW M4 L=6				1
56	PS0300062KH	SPRING PIN 3X6				1
57	SD0641456TP	SHOULDER SCREW D=6.35 H=14.5				1
58	SD0630275SP	HINGE SCREW D=6.35 H=2.7				1
59	40082584	PICKER LINK				1
60	SL6052092TN	SCREW				1
61	22956809	WIPER COLLAR				1
62	40100135	STUD BOLT				1
63	40060801	STOPPER PLATE				1
64	SL6061292TN	SCREW				1
65	40082589	BASE PLATE SCREW				1
66	WP0531001SC	WASHER M5				1
67	40062168	PICKER SPRING HOOK				1

jintex.in

jintex.in

THREAD TRIMMER COMPONENTS (2)

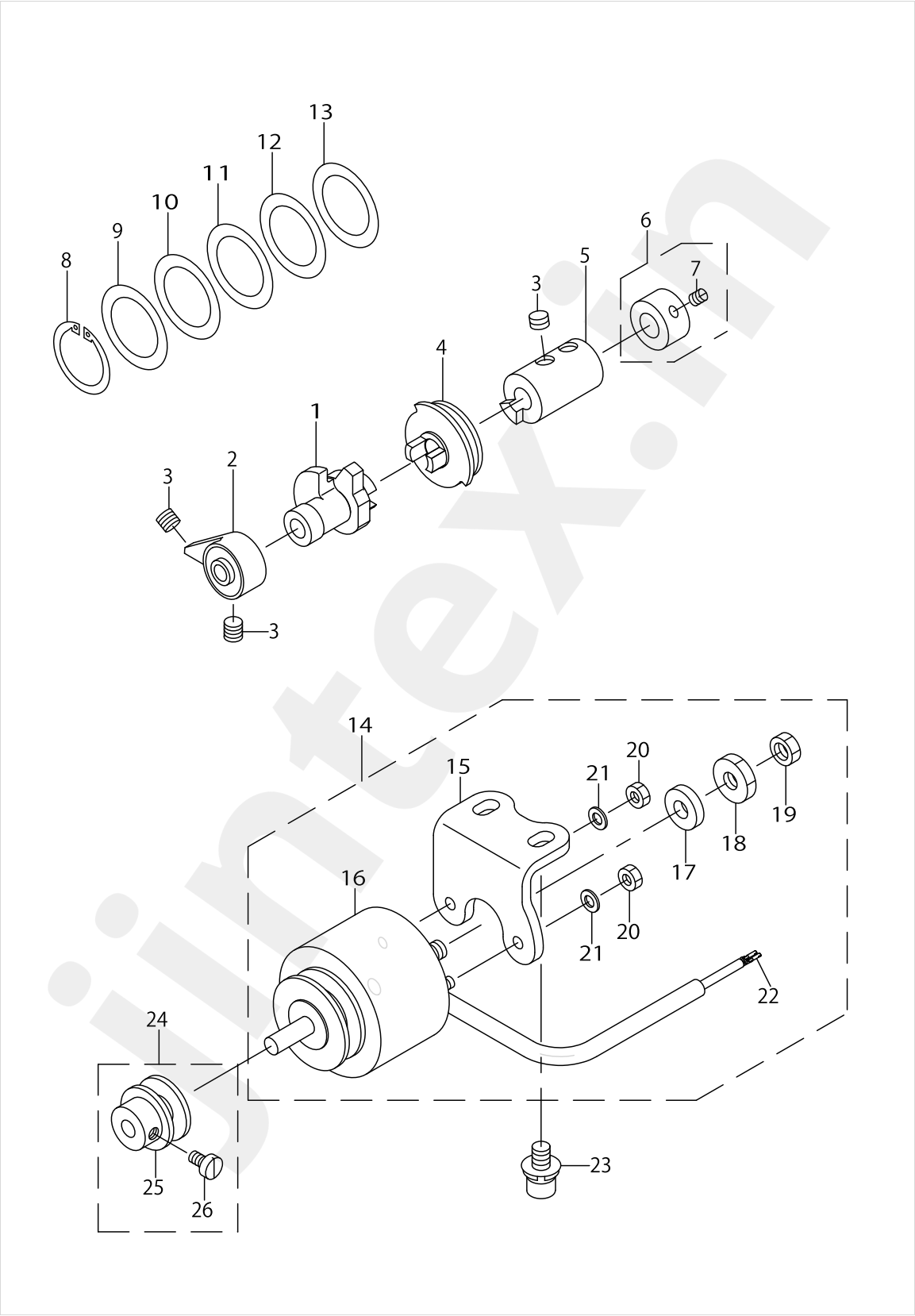

jintex.in

jintex.in

THREAD TRIMMER COMPONENTS (2)

No.	Parts No.	Parts name	Remarks	Level	Cons	Qty
1	40113201	THREAD_CUTTER_CAM_MS_PBN				1
2	11419405	SAFETY CAM				1
3	SS8660612TP	SCREW 1/4-40 L=6				4
4	40113204	CLUTCH_MS_PBN				1
5	11419207	THREAD CUTTER DRIVING COLLAR				1
6	22950950	CAM COLLAR ASM.				1
7	SS8110520TP	SCREW 11/64-40 L=4.5		*		1
8	RC2651218KP	RETAINING RING				1
9	11419603	THRUST COLLAR B				1
10	11419504	THRUST COLLAR A				1
11	11419702	THRUST COLLAR C				1
12	11419801	THRUST COLLAR D				1
13	11419900	THRUST COLLAR E				1
14	40060794	SOLENOID ASM.				1
15	40060791	SOLENOID BASE		*		1
16	40089263	THREAD TRIMMER SOLENOID		*		1
17	11043304	SOLENOID RUBBER		*		1
18	NS6660410SH	NUT		*		1
19	NS6660430SP	NUT 1/4-40		*		1
20	NM6040000SN	NUT M4		*		2
21	WP0430800SC	WASHER M4		*		2
22	HK03464000B	PIN CONTACT		*		2
23	SL6061292TN	SCREW				2
24	23624554	DRIVING BLOCK ASM.				1
25	23624505	DRIVING BLOCK		*		1
26	SS6110710TP	SCREW 11/64-40 L=6.5		*		1

jintex.in

jintex.in

OIL LUBRICATION COMPONENTS

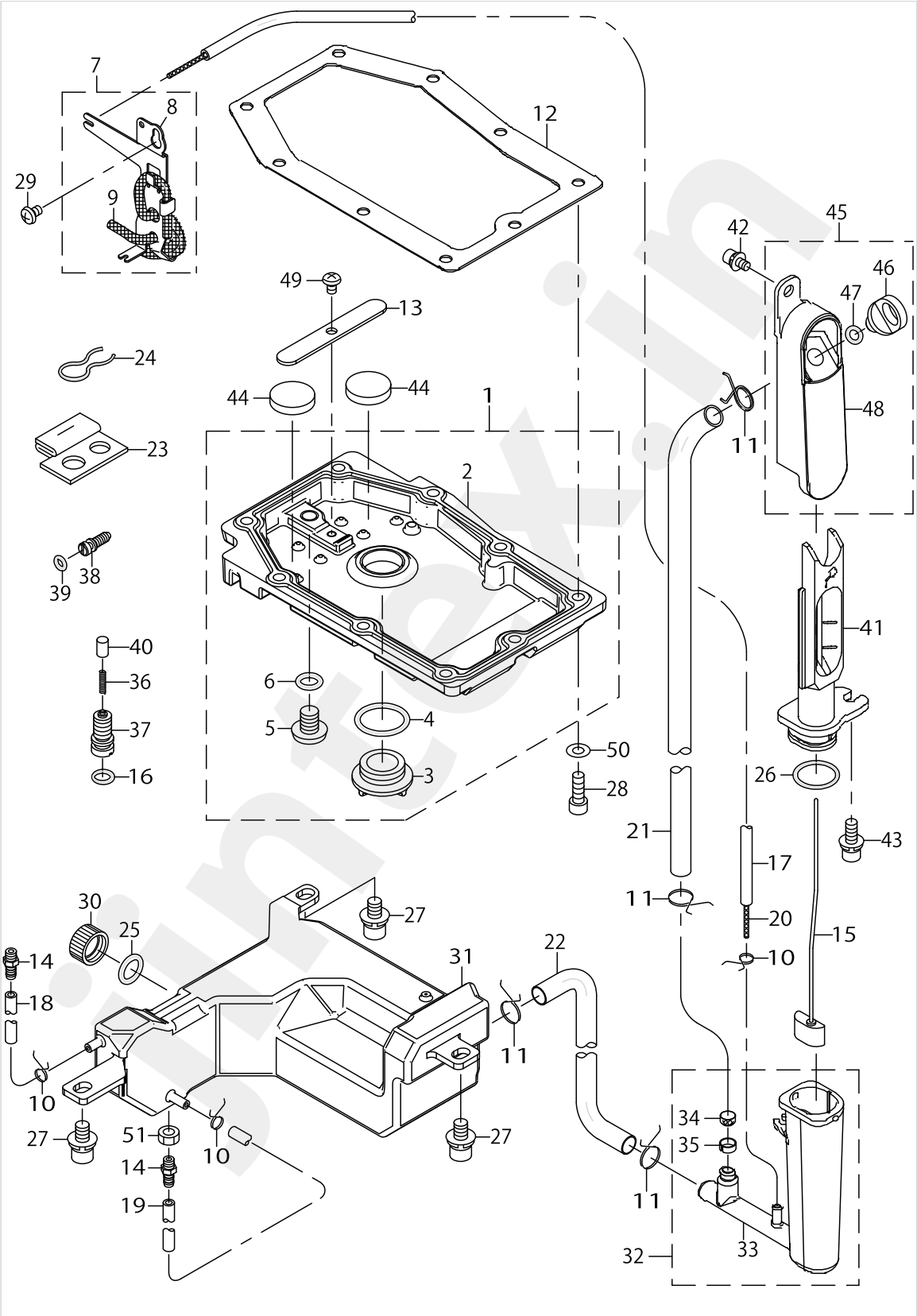

jintex.in

OIL LUBRICATION COMPONENTS

No.	Parts No.	Parts name	Remarks	Level	Cons	Qty
1	40082059	GEAR BOX COVER ASM.				1
2	40135639	GEAR_BOX_COVER		*		1
3	40034246	OIL_SIGHT_WINDOW		*		1
4	RO195240100	RUBBER RING		*		1
5	13171004	DRAIN SCREW		*		1
6	13170105	RUBBER RING		*		1
7	23629256	OIL WICK SUPPORT ASM.				1
8	23629207	OIL WICK SUPPORT		*		1
9	CQ250000001	OIL WICK		*		0.25
10	23629306	PIPE STOPPER A				3
11	23629405	PIPE STOPPER B				4
12	40037166	GEAR BOX PACKING				1
13	40135640	MAGNET_HOLDER				1
14	SQ2050453MZ	CONNECTING SCREW				2
15	40086648	FLOATER_ASM.				1
16	RO068190100	RUBBER RING				1
17	23630007	TUBE				0.57
18	23630007	TUBE				0.08
19	23630007	TUBE				0.11
20	CQ200000001	OIL WICK				0.75
21	23630106	TUBE B				0.165
22	23630106	TUBE B				0.2
23	40075404	FACE FELT ASM.				1
24	22925101	OIL FELT PRESSER				1
25	RO098240100	RUBBER RING				1
26	RO172180100	RUBBER RING				1
27	SL6061292TN	SCREW				3
28	SM6051402TP	SCREW M5X0.8 L=14				9
29	SM5040655SN	SCREW				1
30	40013595	OIL_EXIT_CAP				1
31	40098329	OIL_TANK				1
32	40086646	FLOATER_CASE_ASM.				1
33	40086647	FLOATER_CASE		*		1
34	23630403	OIL FILTER		*		1
35	23630502	OIL FILTER STOPPER		*		1
36	23628902	PLUNGER SPRING				1
37	40038328	PLUNGER SCREW				1
38	40037502	OIL ADJUSTING SCREW				1
39	RO037180100	RUBBER RING				1
40	23628803	PLUNGER				1
41	40086693	FROATER_CASE_GUIDE				1
42	SL6040892TN	BOLT				1
43	SL6051492TN	BOLT				1
44	B8228125000	OIL RESERVOIR MAGNET				2
45	40149785	ASSY_FLOATER_SIGHT_WINDOW_B				1
46	40000344	LUBRICATING INLET CAP		*		1
47	RO048190100	RUBBER RING		*		1

jintex.in

OIL LUBRICATION COMPONENTS

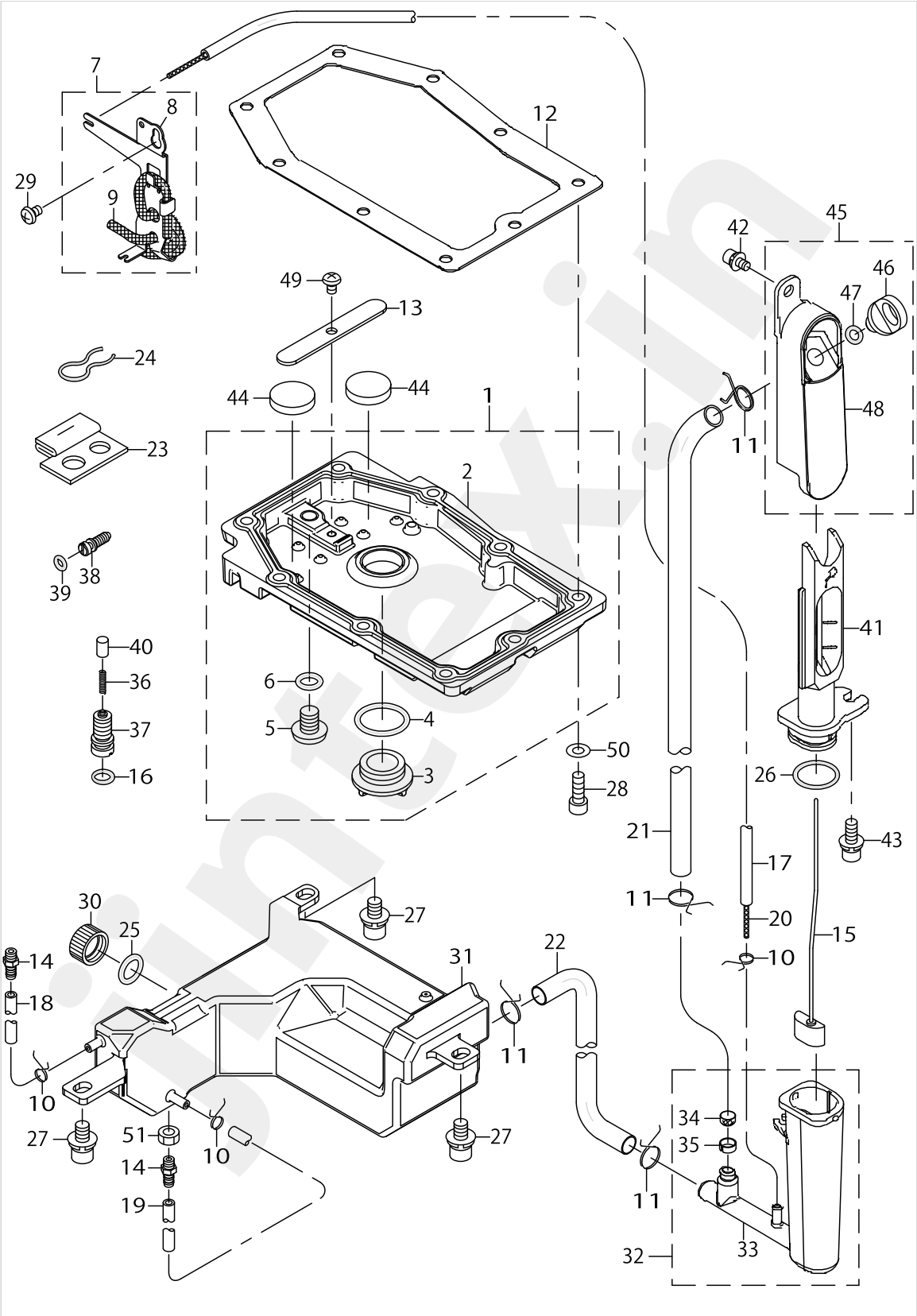

jintex.in

OIL LUBRICATION COMPONENTS

No.	Parts No.	Parts name	Remarks	Level	Cons	Qty
48	40086697	FLOATER_SIGHT_WINDOW_B		*		1
49	SM4040601SC	SCREW M4X0.7 L=6				1
50	WP0501016SD	WASHER 5X10.5X1				9
51	NM6050001SC	NUT M5X0.8 TYPE1				1

jintex.in

jintex.in

AUTOMATIC REVERSE FEED COMPONENTS

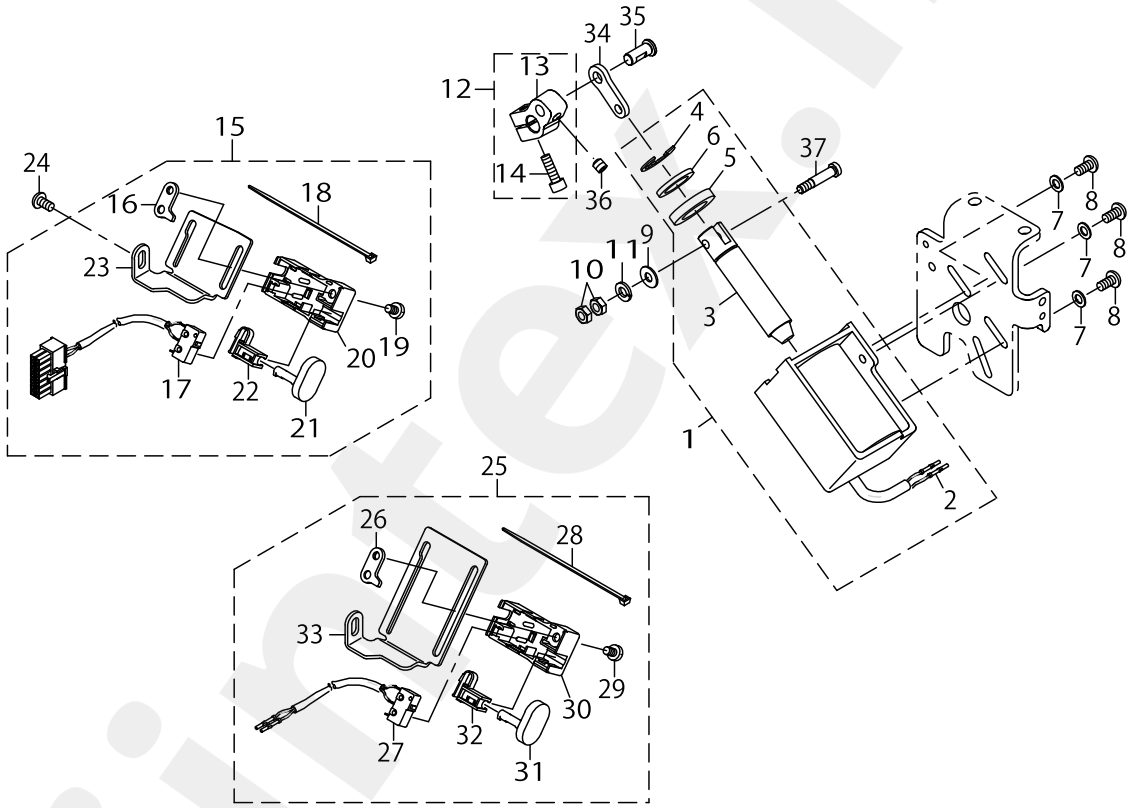

jintex.in

AUTOMATIC REVERSE FEED COMPONENTS

No.	Parts No.	Parts name	Remarks	Level	Cons	Qty
1	40086750	REVERSE FEED SOLENOID ASM.				1
2	HK03464000B	PIN CONTACT		*		2
3	40086753	REVERSE FEED SOLENOID PLUNGER		*		1
4	RE1200000K0	E-RING 12		*		1
5	D2468555B00	RUBBER PLUNGER		*		1
6	WP1602616SZ	WASHER 16X24X2.6		*		1
7	WP0550800SP	WASHER 5.5X10X0.8				3
8	SM4051055SP	SCREW				3
9	WP0551016SH	WASHER 5.5X13X1				1
10	NM6050001SP	NUT M5				2
11	WS0610002KN	SPRING WASHER 6.1X12.2X1.5				1
12	40095844	REVERSE FEED ARM ASM.				1
13	40086698	REVERSE_FEED_ARM		*		1
14	SM6051602TP	SCREW M5X0.8 L=16		*		1
15	23631757	REVERSE FEED SWITCH ASM.				1
16	23632102	REVERSE FEED SWITCH BASE GUIDE		*		1
17	23632359	REVERSE FEED CORD ASM.		*		1
18	EA9500B0100	CABLE BAND		*		1
19	SS7110740TP	SCREW 11/64-40 L=7		*		1
20	23631708	REVERSE FEED SWITCH COVER		*		1
21	23631807	REVERSE FEED SWITCH SHAFT		*		1
22	23631906	REVERSE FEED SWITCH SUPPORT		*		1
23	23632003	REVERSE FEED SWITCH BASE		*		1
24	SM4051055SP	SCREW				1
25	23632656	OPTION SWITCH ASM.	OPTIONAL PARTS			1
26	23632102	REVERSE FEED SWITCH BASE GUIDE		*		1
27	23632250	REVERSE FEED CORD ASM.		*		1
28	EA9500B0100	CABLE BAND		*		1
29	SS7110740TP	SCREW 11/64-40 L=7		*		1
30	23631708	REVERSE FEED SWITCH COVER		*		1
31	23631807	REVERSE FEED SWITCH SHAFT		*		1
32	23631906	REVERSE FEED SWITCH SUPPORT		*		1
33	23632607	OPTION SWITCH BASE		*		1
34	40086655	REVERSE_FEED_CONNECTION_LINK				1
35	40086699	REVERSE_FEED_LINK_PIN				1
36	SM8480652TP	SCREW				1
37	40086759	BACK_SOLENOID_PLUNGER_PIN				1

jintex.in

jintex.in

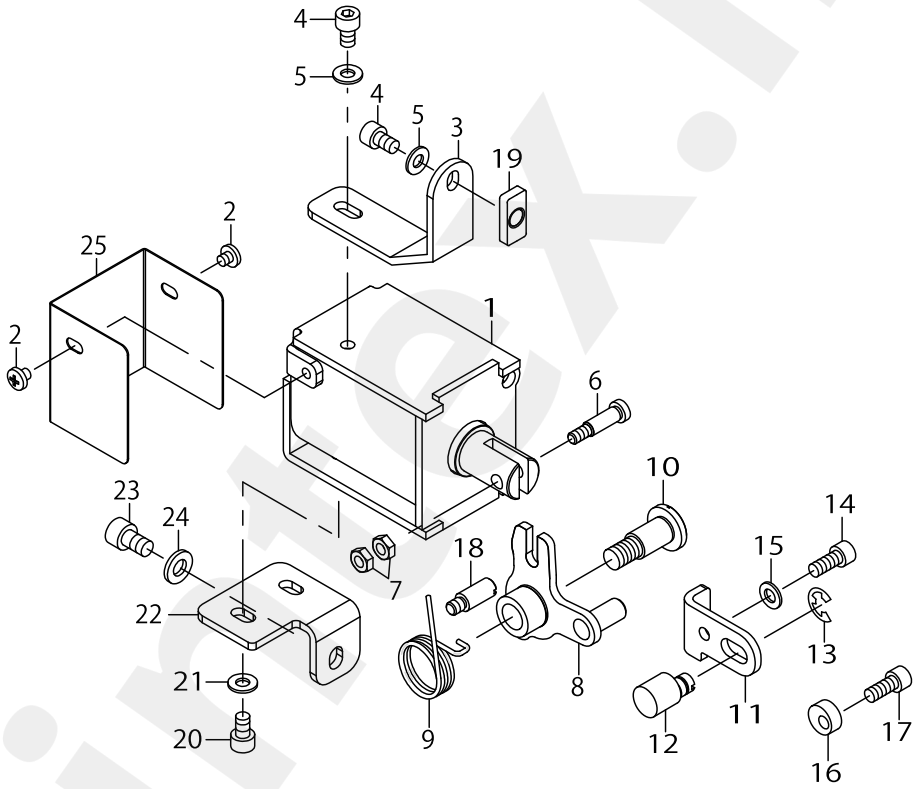

jintex.in

CONDENSE COMPONENTS

No.	Parts No.	Parts name	Remarks	Level	Cons	Qty
1	40100043	CONDENSE_SOLENOID_ASM.				1
2	SM5040401SE	SCREW M4 L=4				2
3	40100046	SOLENOID_BASE_A				1
4	SM6050802TP	SCREW M5X0.8 L=8				2
5	WP0501016SD	WASHER 5X10.5X1				2
6	22962906	PLUNGER ARM PIN				1
7	NS6110350SP	NUT 11/64-40				2
8	40100038	CONDENSE_ARM_ASM.				1
9	40100050	CONDENSE_SPRING				1
10	SD1001506TP	SHOULDER SCREW D=10 H=15				1
11	40162657	CONDENSE_STOPPER				1
12	40060833	CONDENSE PIVOT				1
13	RE0600000K0	E-RING 6				1
14	SM6051202TP	SCREW M5X0.8 L=12				1
15	WP0531000SD	WASHER M5				1
16	40061486	STOPPER COLLAR				1
17	SM6051202TP	SCREW M5X0.8 L=12				1
18	40100172	CONDENSE_ARM_STOPPER¥n				1
19	22609606	FEED DRIVING ROCKER BLOCK S				1
20	SM6050802TP	SCREW M5X0.8 L=8				2
21	WP0501016SD	WASHER 5X10.5X1				2
22	40100047	SOLENOID_BASE_B				1
23	SM6061002TP	SCREW M6 L=10				1
24	WP0641601SD	WASHER M6				1
25	40100048	SOLENOID_COVER				1

jintex.in

jintex.in

WIPER COMPONENTS (FOR DDL-9000B-**-WB)

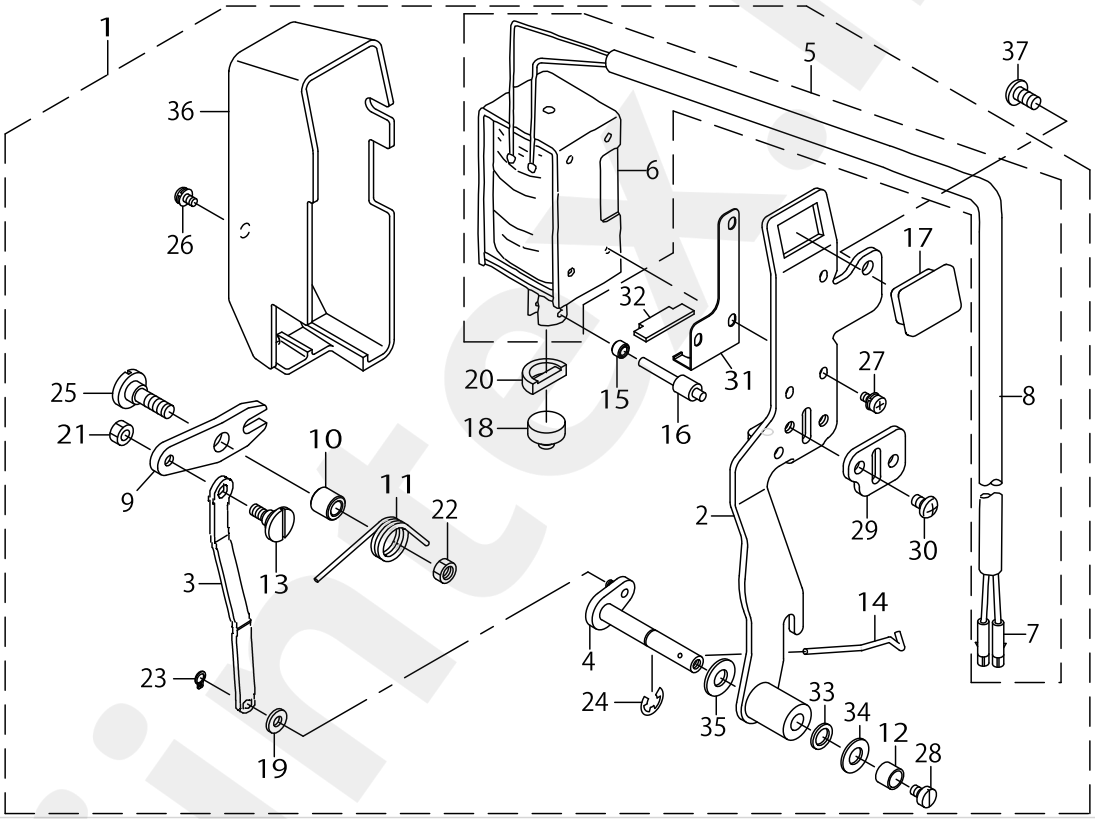

WIPER COMPONENTS (FOR DDL-9000B-**-WB)

No.	Parts No.	Parts name	Remarks	Level	Cons	Qty
1	40086676	WIPER ASM.				1
2	40077853	WIPER BASE ASM.		*		1
3	40086723	WIPER LINK B		*		1
4	40086724	WIPER SHAFT ASM.		*		1
5	40095175	WIPER_SOLENOID_ASM.		*		1
6	40089264	WIPER SOLENOID		*		1
7	HK03464000B	PIN CONTACT		*		2
8	HW500070000	2-CORE CABTYRE CORD		*		1.3
9	22956106	WIPER LINK A		*		1
10	22956205	WIPER HINGE SCREW COLLAR		*		1
11	22956304	WIPER SPRING		*		1
12	22956809	WIPER COLLAR		*		1
13	22956908	WIPER LINK B HINGE SCREW		*		1
14	22957005	WIPER		*		1
15	22957203	WIPER LINK COLLAR		*		1
16	40077852	WIPER SOLENOID SHAFT		*		1
17	40086678	WIPER_SW_RUBBER		*		1
18	22955900	WIPER RUBBER A		*		1
19	40086717	FELT_B		*		1
20	22956007	WIPER RUBBER B		*		1
21	NS6090310SP	NUT 9/64-40		*		1
22	NS6110310SP	NUT 11/64-40		*		1
23	RC0370411KP	RETAINING RING		*		1
24	RE0500000K0	E-RING		*		1
25	SD0650321TP	HINGE SCREW D=6.5 H=3.2		*		1
26	SL4030631SC	SCREW M3X6		*		1
27	SL4030641SE	SCREW		*		3
28	SS6090540SP	SCREW 9/64-40 L=5.0		*		1
29	40077851	WIPER SOLENOID SHAFT GUIDE		*		1
30	SS4110615SP	SCREW 11/64-40 L=6		*		2
31	40086680	WIPER_STOPPER_RUBBER_HOLDER		*		1
32	40086679	WIPER_STOPPER_RUBBER		*		1
33	WP0661016SP	WASHER		*		1
34	WP0651001SC	WASHER		*		1
35	40086716	FELT_A		*		1
36	22955504	WIPER COVER		*		1
37	SM4051055SP	SCREW				1

jintex.in

THREAD STAND COMPONENTS

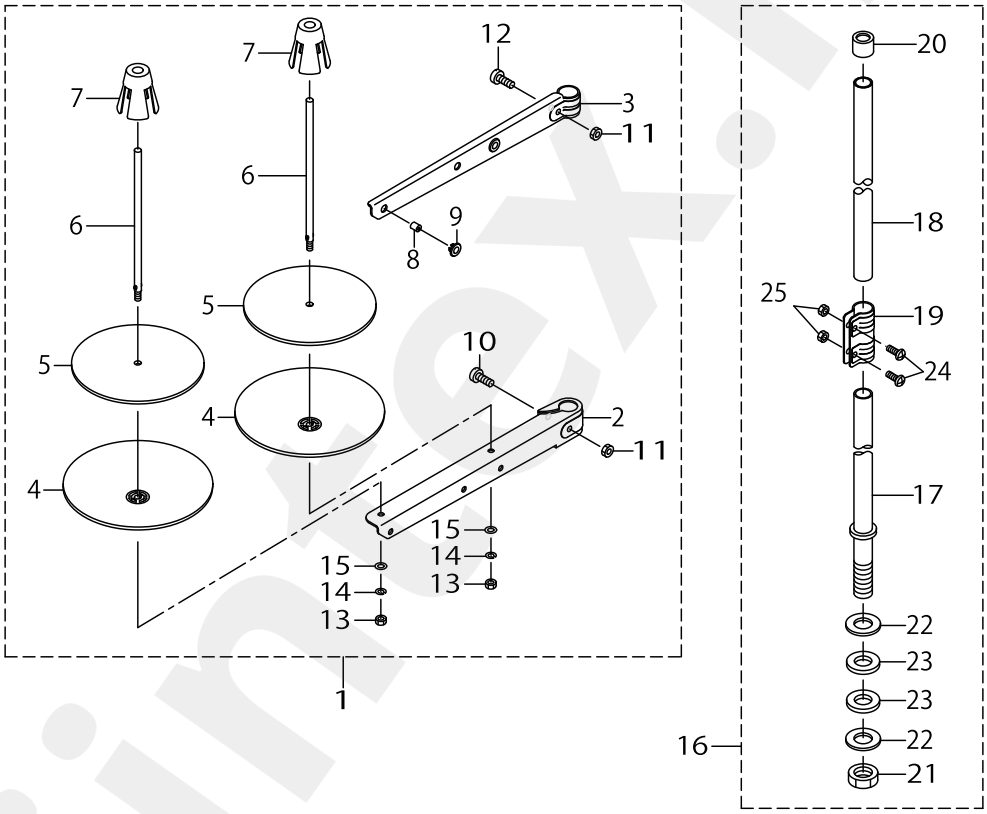

THREAD STAND COMPONENTS

No.	Parts No.	Parts name	Remarks	Level	Cons	Qty
1	40108402	THRED_STAND_B				1
2	40085786	SPOOL REST ARM (LOWER)		*		1
3	40085787	SPOOL REST ARM (UPPER)		*		1
4	40085788	SPOOL REST		*		2
5	40085789	SPOOL REST CUSHION		*		2
6	40085790	SPOOL PIN		*		2
7	40085791	SPOOL RETAINER		*		2
8	40085794	THREAD GUIDE		*		2
9	40085795	THREAD GUIDE BUSHING		*		2
10	40096326	SPOOL REST ARM LOWER SCREW		*		1
11	NM6050001SE	NUT M5		*		2
12	40096327	SPOOL REST ARM UPPER SCREW		*		1
13	NM6050001SE	NUT M5		*		2
14	WS0510002KN	SPRING WASHER M5		*		2
15	WP0531001SC	WASHER M5		*		2
16	40108401	THREAD_STAND_A				1
17	40085784	SPOOL REST ROD LOWER		*		1
18	40085785	SPOOL REST ROD UPPER		*		1
19	40085792	SPOOL REST ROD JOINT		*		1
20	40085793	SPOOL REST ROD RUBBER CAP		*		1
21	40096325	SPOOL REST ROD NUT		*		1
22	WP1612616SE	WASHER 16X30X2.6		*		2
23	40085796	SPOOL REST ROD RUBBER CUSHION		*		2
24	SM4051405SE	SCREW M5 L=14		*		2
25	NM6050001SE	NUT M5		*		2

jintex.in

jintex.in

UNDER COVER COMPONENTS

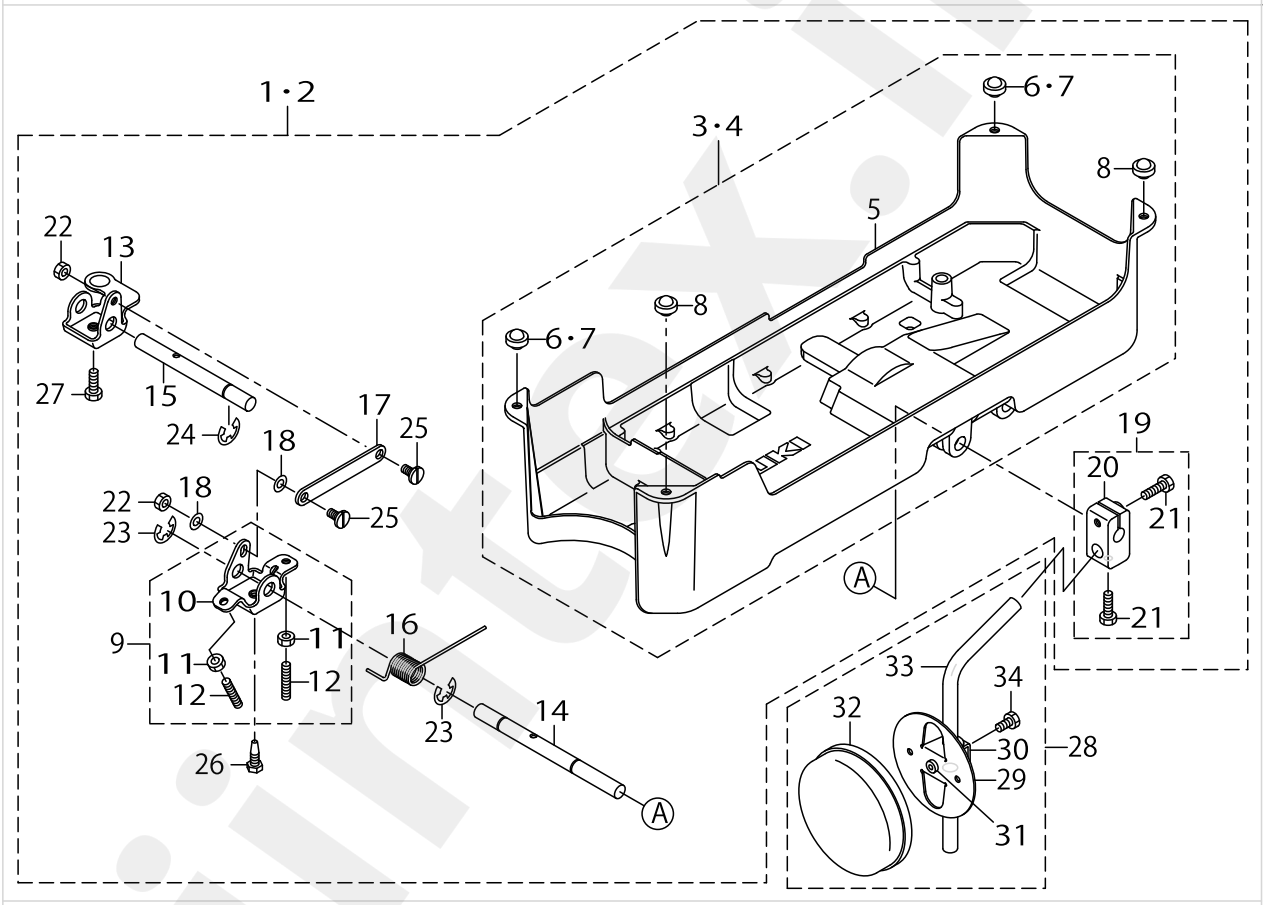

UNDER COVER COMPONENTS

No.	Parts No.	Parts name	Remarks	Level	Cons	Qty
1	40089665	UNDER COVER AH ASM.	FOR DDL-9000B-SH			1
2	40062321	UNDER COVER A ASM.	EXCEPT DDL-9000B-SH			1
3	40089671	UNDER COVER BH ASM.	FOR DDL-9000B-SH	*		1
4	40062323	UNDER COVER B ASM.	EXCEPT DDL-9000B-SH	*		1
5	23639008	UNDER COVER		*		1
6	22932008	RUBBER CUSHION	FOR DDL-9000B-SH	*		2
7	B1116210D00	FRAME SUPPORT RUBBER	EXCEPT DDL-9000B-SH	*		2
8	B1116210D00	FRAME SUPPORT RUBBER		*		2
9	23639156	BRACKET ASM.		*		1
10	23639107	BRACKET		*		1
11	NM6060001SE	NUT M6		*		2
12	SM8063012TR	SCREW M6 L=30		*		2
13	23639206	CONNECTING ROT		*		1
14	23639305	KNEE PRESS ROD		*		1
15	23639404	SHAFT		*		1
16	23639503	SPRING		*		1
17	23639602	CONNECTING ROD		*		1
18	WP0650876SD	WASHER 6.5X13X0.8		*		2
19	22932453	BRACKET ASM.		*		1
20	22932404	BRACKET		*		1
21	SM9062053SR	SCREW M6 L=20		*		2
22	NS6150310SP	NUT 15/64-28		*		2
23	RE1000000K0	E-RING 10		*		2
24	RE1000000K0	E-RING 10		*		1
25	SD0720331SP	HINGE SCREW D=7.24 H=3.3		*		2
26	SM9061853SR	SCREW M6 L=17.5		*		1
27	SM9061853SR	SCREW M6 L=17.5		*		1
28	22934251	KNEE PAD PLATE ASM.				1
29	22934202	KNEE PAD PLATE		*		1
30	22934301	KNEE PAD PLATE SUPPORT		*		1
31	22934400	KNEE PAD PLATE RUBBER		*		1
32	22934509	KNEE PAD PLATE COVER		*		1
33	22934608	KNEE PAD UPRIGHT SHAFT		*		1
34	SM9061203SE	SCREW M6 L=12		*		1

jintex.in

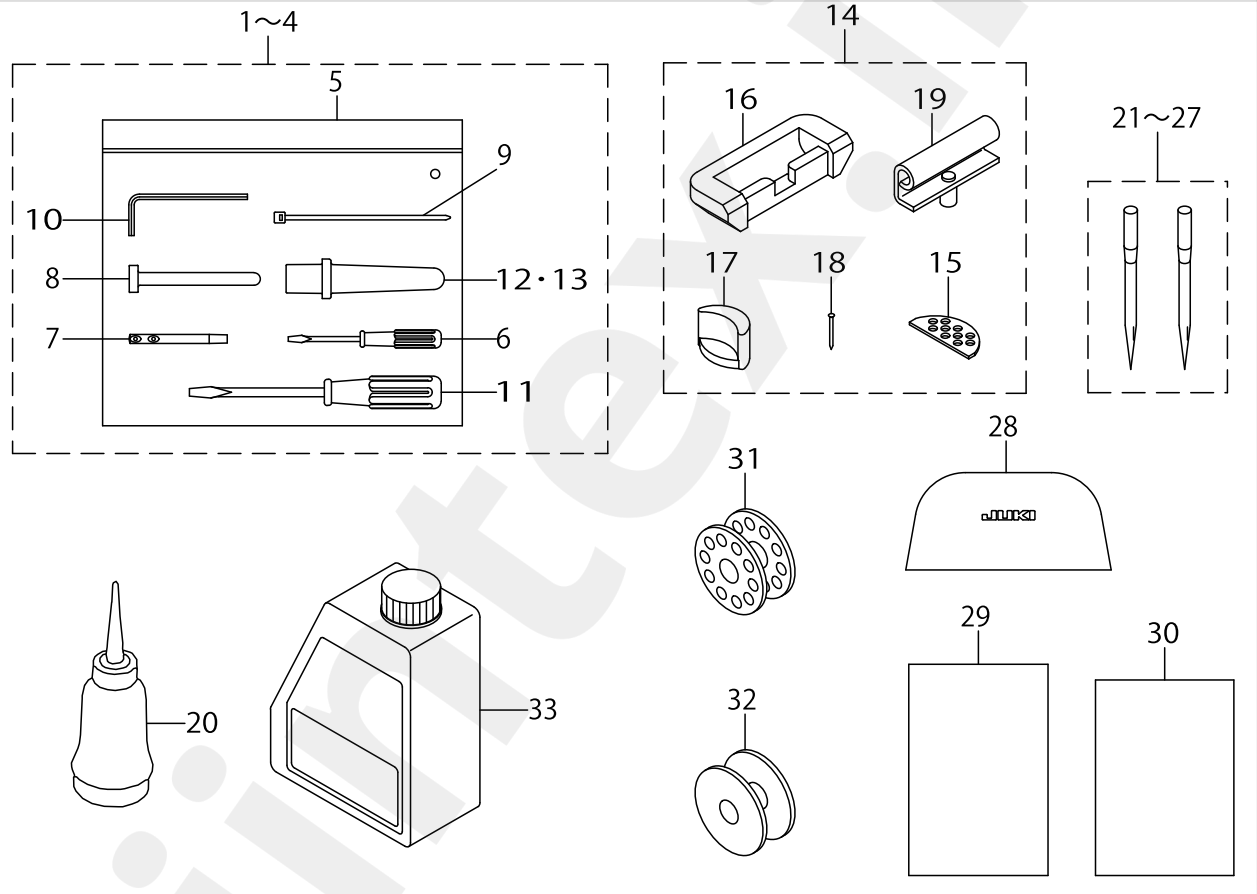
1～4
5
9
10
8
12・13
7
6
11
14
16
19
17
18
15
21～27
28
31
29
30
20
33
32

ACCESSORIE PART COMPONENTS

No.	Parts No.	Parts name	Remarks	Level	Cons	Qty
1	40089663	ACCESSORIE BAG ASM.	EXCEPT TYPE AK			1
2	40091140	ACCESSORIE BAG AK ASM.	TYPE AK			1
3	40099736	ACCESSORIE BAG ASM. 2	FOR CHINA (EXCEPT TYPE AK)			1
4	40099737	ACCESSORIE BAG AK ASM. 2	FOR CHINA (TYPE AK)			1
5	22932800	ACCESSORIE BAG		*		1
6	22933204	SCREW DRIVER (SMALL)	EXCEPT CHINA	*		1
7	22502504	THREAD GUIDE BAR		*		1
8	23639701	KNEE LIFTER PRESSER ROD		*		1
9	EA9500B0100	CABLE BAND		*		1
10	40055591	HEXAGONAL WRENCH KYE		*		1
11	22933105	SCREW DRIVER (MIDDLE)	EXCEPT CHINA	*		1
12	22931604	FRAME SUPPORT BAR	EXCEPT TYPE AK	*		1
13	40024081	HEAD SUPPORT ROD	TYPE AK	*		1
14	22958052	RUBBER HINGE ASM.				1
15	22926505	WASHER		*		2
16	22926000	RUBBER CUSHION		*		2
17	22958003	FRAME BUBBER CUSHION		*		2
18	22926208	NAIL		*		8
19	22926356	HINGE COMPL.		*		2
20	B91210120A0	OILER ASM.				1
21	MDB100B1100	NEEDLE DBX1 #11	VARIOUS NOS.FOR DESTINATIONS			1
22	MDB100B0900	NEEDLE DBX1 #9	VARIOUS NOS.FOR DESTINATIONS			1
23	MDB100B2100	NEEDLE DBX1 #21	VARIOUS NOS.FOR DESTINATIONS			1
24	MDB100B1400	NEEDLE DBX1 #14	VARIOUS NOS.FOR DESTINATIONS			1
25	MC200501300	NEEDLE 134 NM130	VARIOUS NOS.FOR DESTINATIONS			1
26	MC200500650	NEEDLE 134 NM65	VARIOUS NOS.FOR DESTINATIONS			1
27	MC200500750	NEEDLE 134 NM75	VARIOUS NOS.FOR DESTINATIONS			1
28	40135803	HEAD COVER				1
29	40089323	DDL-9000B SETUP DOCUMENT	EXCEPT CHINA			1
30	CM600100201	WEEE INFORMATION SHEET	VARIOUS NOS.FOR DESTINATIONS			1
31	B9117012000	BOBBIN	VARIOUS NOS.FOR DESTINATIONS			1
32	22964001	BOBBIN A	VARIOUS NOS.FOR DESTINATIONS			1
33	40102087	JUKI_MACHINE_OIL_7	EXCEPT CHINA			1

jintex.in

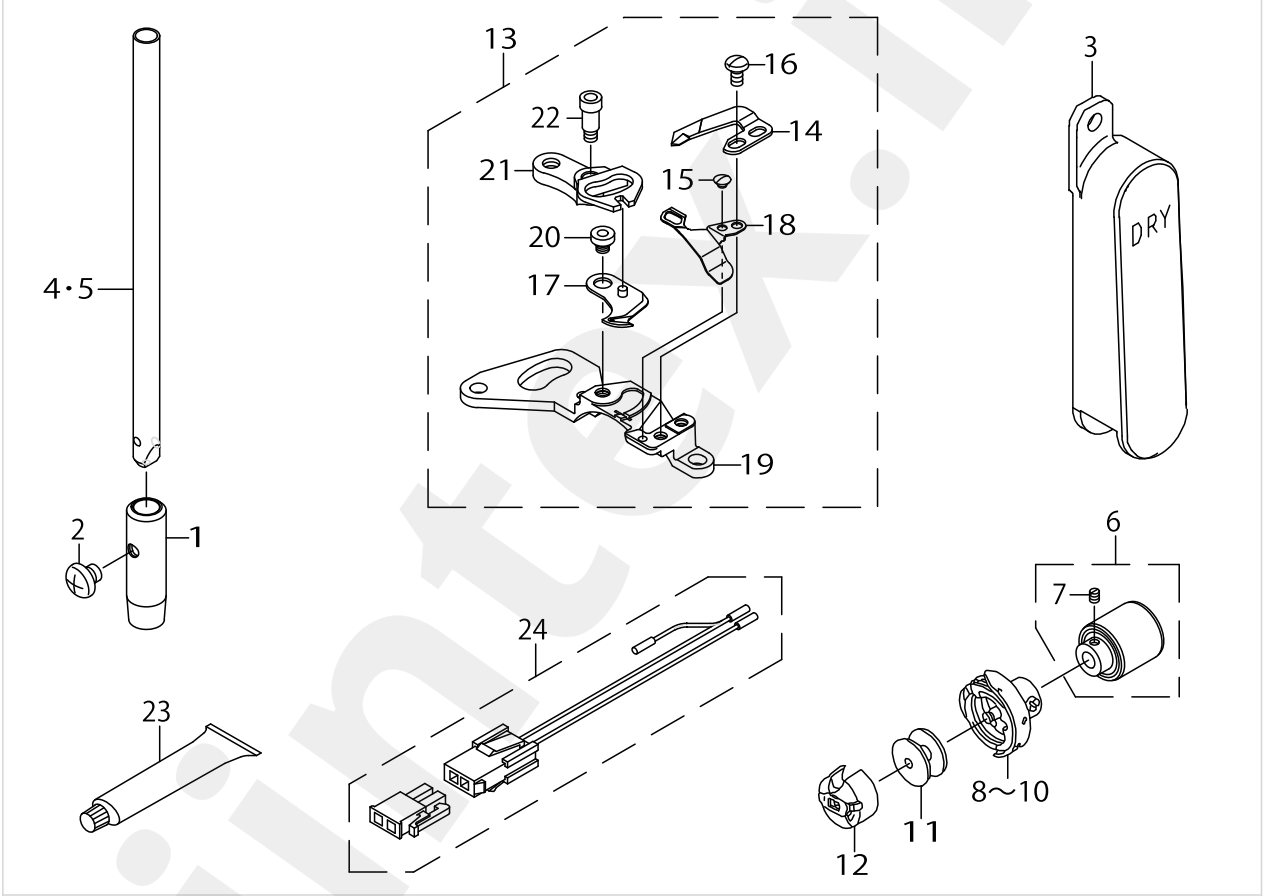

jintex.in

jintex.in

EXCLUSIVE PARTS DDL-9000B DS

No.	Parts No.	Parts name	Remarks	Level	Cons	Qty
1	40086605	NEEDLE_BAR_LOWER_METAL_MD				1
2	SM4050501SC	SCREW M5X0.8 L=5				1
3	40037146	FLOATER SIGHT WINDOW D				1
4	40086604	NEEDLE_BAR_D_(B)	FOR DDL-9000B-DS BB			1
5	40086602	NEEDLE_BAR_D_(A)	FOR DDL-9000B-DS AA,EE,GG			1
6	40089274	HOOK_SHAFT_FRONT_BEARING_COMPL.				1
7	SS6110420TP	SCREW 11/64-40 L=4.8		*		2
8	22890404	RP HOOK C	FOR DDL-9000B-DS BB		☆	1
9	22890206	RP HOOK	FOR DDL-9000B-DS EE,GG		☆	1
10	22890305	RP HOOK S	FOR DDL-9000B-DS AA		☆	1
11	22964001	BOBBIN			☆	1
12	22896252	BOBBIN CASE ASM.			☆	1
13	40050586	KNIFE UNIT D				1
14	22895908	COUNTER KNIFE		*	☆	1
15	SS2060210SP	SCREW 3/32-56 L=2.3		*		1
16	SS4080620TP	SCREW 1/8-44 L=6		*		2
17	11040052	MOVING KNIFE ASM.		*	☆	1
18	40050588	THREAD GUIDE FOR KNIFE D		*	☆	1
19	22947907	KNIFE MOUNTING BASE		*		1
20	11040409	MOVING KNIFE HINGE SCREW		*		1
21	22896005	FORKED BASE FOR KNIFE		*		1
22	SD0460703TP	HINGE SCREW D=4.6 H=7		*		1
23	40006323	JUKI GREASE A TUBE	FOR OPTIONAL PARTS			1
24	40050581	JOINT_CABLE_ASM.				1

jintex.in

jintex.in

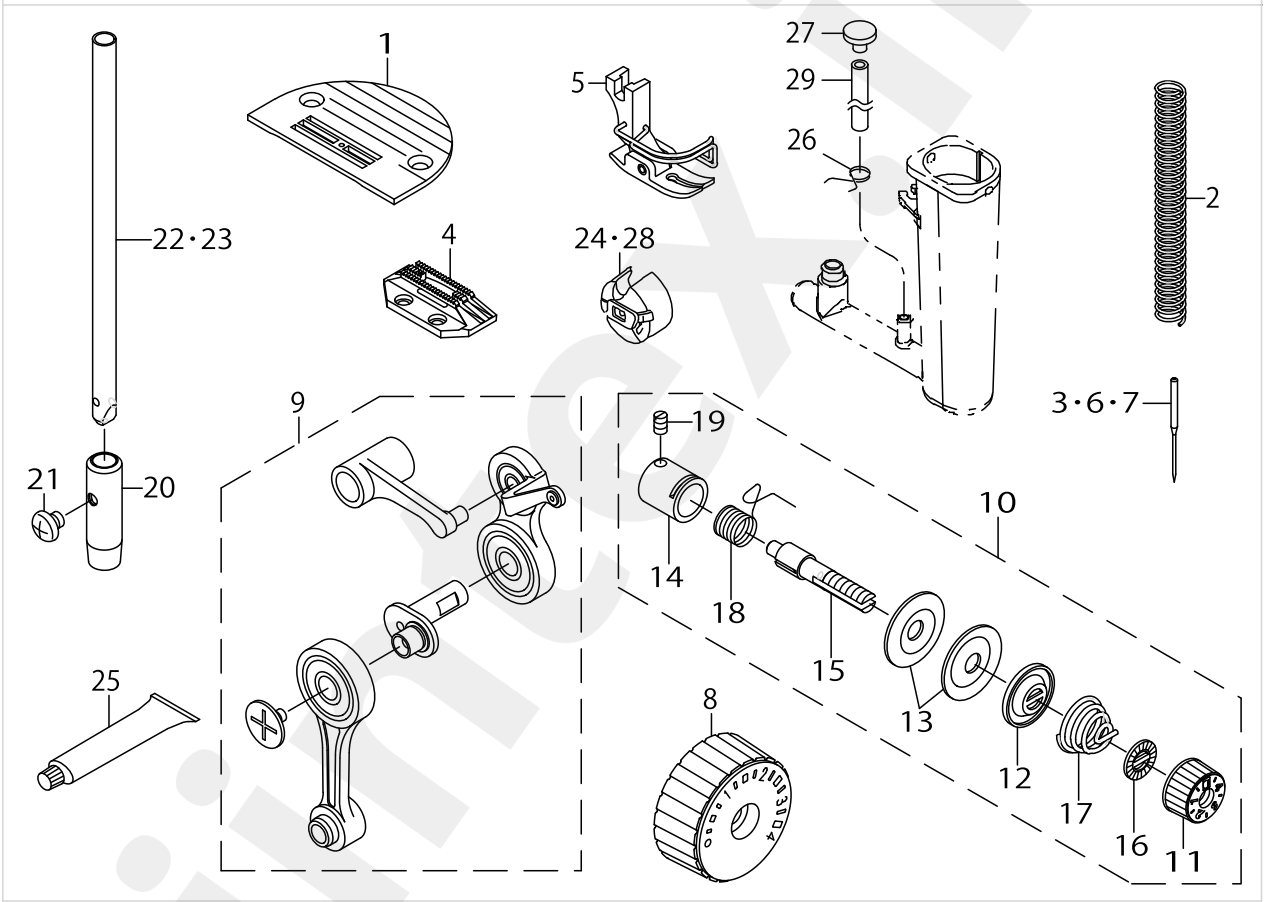

jintex.in

jintex.in

EXCLUSIVE PARTS DDL-9000B MS,MA

No.	Parts No.	Parts name	Remarks	Level	Cons	Qty
1	11001906	THROAT PLATE K	FOR DDL-9000B-MA EE			1
2	11162104	SPRING	FOR DDL-9000B-MA			1
3	MDB100B1100	NEEDLE DBX1 #11	FOR DDL-9000B-MA GG		☆	1
4	D1613155W00	FEED DOG W	FOR DDL-9000B-MA EE			1
5	D1524555DBB	PRESSER FOOT ASM.	FOR DDL-9000B-MA AA,BB,EE			1
6	MDB100B0900	NEEDLE DBX1 #9	FOR DDL-9000B-MA AA,EE		☆	1
7	MC200500650	NEEDLE 134 NM65	FOR DDL-9000B-MA BB		☆	1
8	40141843	REGULATOR PIN DIAL 4	FOR DDL-9000B-MA			1
9	40037439	THREAD TAKE UP COMP. A	FOR DDL-9000B-MA			1
10	40037479	THREAD TENSION DISK ASM. A	FOR DDL-9000B-MA			1
11	23626005	THREAD TENSION NUT		*		1
12	B3132552000	THREAD TENSION DISK PRESSER		*		1
13	B3126012000	THREAD TENSION DISK		*		2
14	40024845	TENSION POST SOCKET ASM.		*		1
15	B3115552000	TENSION POST		*		1
16	B3120125000	ROTATING STOPPER		*		1
17	D3129555D00	THREAD TENSION SPRING		*		1
18	D3128555D00	TAKE-UP SPRING		*	☆	1
19	SS8090670SP	SCREW 9/64-40 L=5.5		*		1
20	40086605	NEEDLE_BAR_LOWER_METAL_MD				1
21	SM4050501SC	SCREW M5X0.8 L=5				1
22	40086604	NEEDLE_BAR_D_(B)	FOR DDL-9000B-MS MA,BB			1
23	40086602	NEEDLE_BAR_D_(A)	FOR DDL-9000B-MS MA,AA,EE,GG			1
24	40000264	BOBBIN CASE ASM.	FOR DDL-9000B-MA			1
25	40006323	JUKI GREASE A TUBE	OPTIONAL PARTS			1
26	23629306	PIPE STOPPER A				1
27	40042086	CAP				1
28	11038759	BOBBIN CASE ASM.	FOR DDL-9000B-MS			1
29	23630007	TUBE				0.07

jintex.in

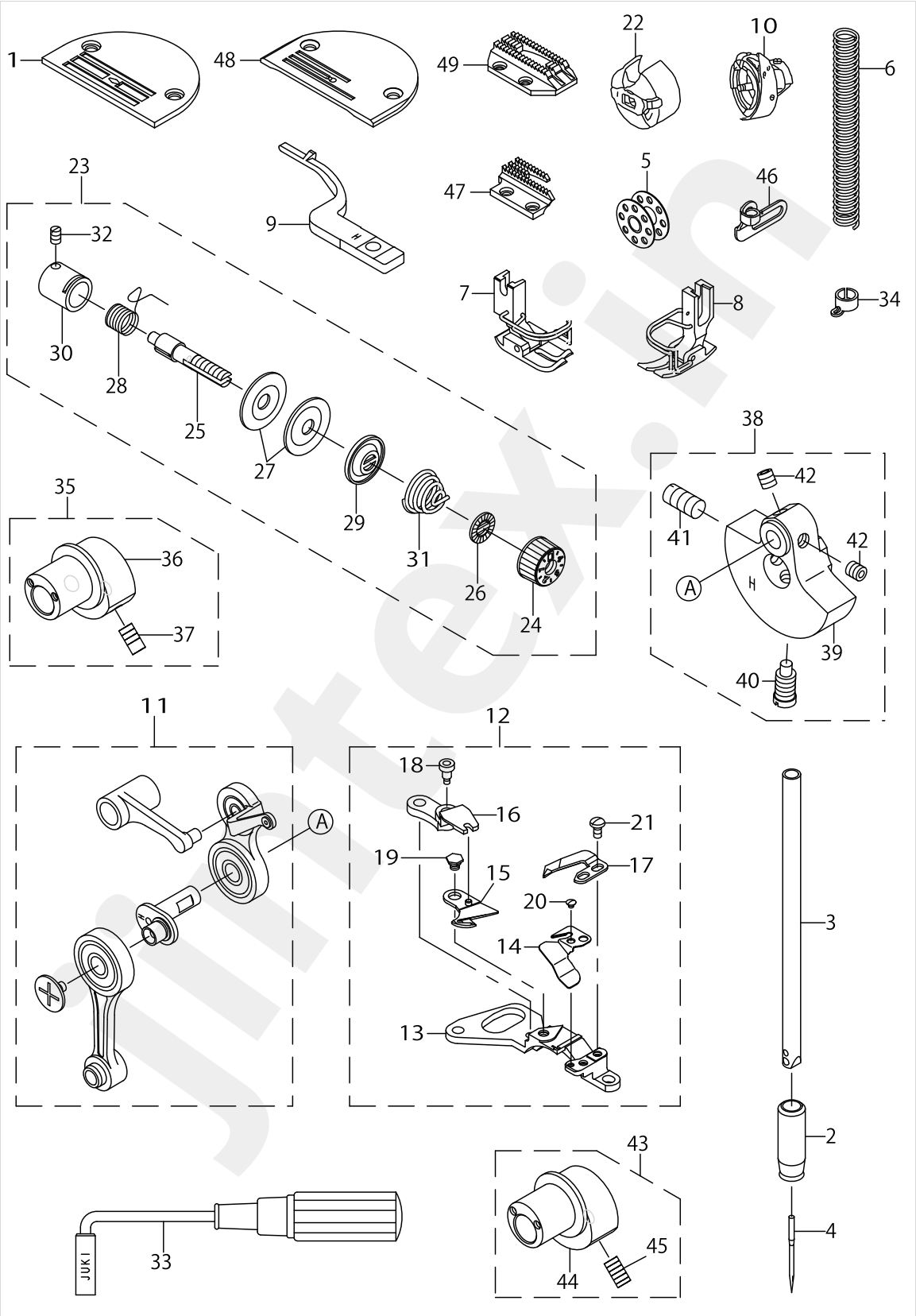
1
48
49
22
10
6
23
9
47
5
46
32
7
8
34
30
28
25
27
29
31
26
24
38
42
41
42
A
39
40
35
36
37
11
A
12
18
16
21
19
15
17
20
14
13
3
2
4
43
45
44
33
JUKI

jintex.in

EXCLUSIVE PARTS DDL-9000B SH

No.	Parts No.	Parts name	Remarks	Level	Cons	Qty
1	40089605	THROAT_PLATE_J	FOR AA,BB,EE			1
2	40107708	NEEDLE_BAR_METAL_LOWER_H				1
3	40061767	NEEDLE BAR H				1
4	MDB100B2100	NEEDLE DBX1 #21	FOR AA,GG,EE		☆	1
5	B9117012000	BOBBIN				1
6	B1505552000A	PRESSER SPRING				1
7	D1524555EBL	PRESSER FOOT ASM.	FOR AA,BB,EE			1
8	40064839	PRESSER FOOT ASM.				1
9	40089610	INNER_HOOK_HOLDER_H				1
10	11092251	LUBRICATING BOBBIN ASM.			☆	1
11	40055604	THREAD TAKE UP COMP. H				1
12	40050587	KNIFE UNIT H				1
13	11095502	KNIFE MOUNT BASE		*		1
14	40044190	THREAD_GUIDE_FOR_KNIFE H		*	☆	1
15	11409257	MOVING KNIFE J ASM.		*	☆	1
16	40009894	FORKED BASE FOR KNIFE		*		1
17	40050589	FIX KNIFE H		*	☆	1
18	SD0460703TP	HINGE SCREW D=4.6 H=7		*		1
19	SD0500131TP	HINGE SCREW D=5 H=1.25		*		1
20	SS2060210SP	SCREW 3/32-56 L=2.3		*		1
21	SS4080620TP	SCREW 1/8-44 L=6				2
22	40000264	BOBBIN CASE ASM.			☆	1
23	40037313	THREAD TENSION DISK ASM. H				1
24	23626005	THREAD TENSION NUT		*		1
25	B3115552000	TENSION POST		*		1
26	B3120125000	ROTATING STOPPER		*		1
27	B3126012000	THREAD TENSION DISK		*		2
28	B3128012000	TAKE-UP SPRING		*	☆	1
29	B3132552000	THREAD TENSION DISK PRESSER		*		1
30	40024845	TENSION POST SOCKET ASM.		*		1
31	B3114232000	THREAD TENSION SPRING		*		1
32	SS8090670SP	SCREW 9/64-40 L=5.5		*		1
33	J1063000000	WRENCH	OPTIONAL PARTS			1
34	40024124	NEEDLE BAR THREAD GUIDE				1
35	23619059	VERTICAL FEED CAM H ASM.				1
36	23619000	VERTICAL FEED CAM H		*		1
37	SS8151150TP	SCREW 15/64-28 L=10.5		*		2
38	40055058	ASSY COUNTER WEIGHT H				1
39	40053411	COUNTER WEIGHT H		*		1
40	40004171	COUNTER_WEIGHT_SCREW		*		1
41	SM8081652TP	SCREW M8 L=16		*		1
42	SM80606A2TP	SCREW M6 L=6		*		2
43	40069369	VERTICAL FEED CAM ASM. 2.0	OPTIONAL PARTS			1
44	40069370	VERTICAL FEED CAM 2.0		*		1
45	SS8151150TP	SCREW 15/64-28 L=10.5		*		2
46	40063697	ARM THREAD GUIDE A H				1
47	11062601	FEED DOG	FOR GG			1

jintex.in

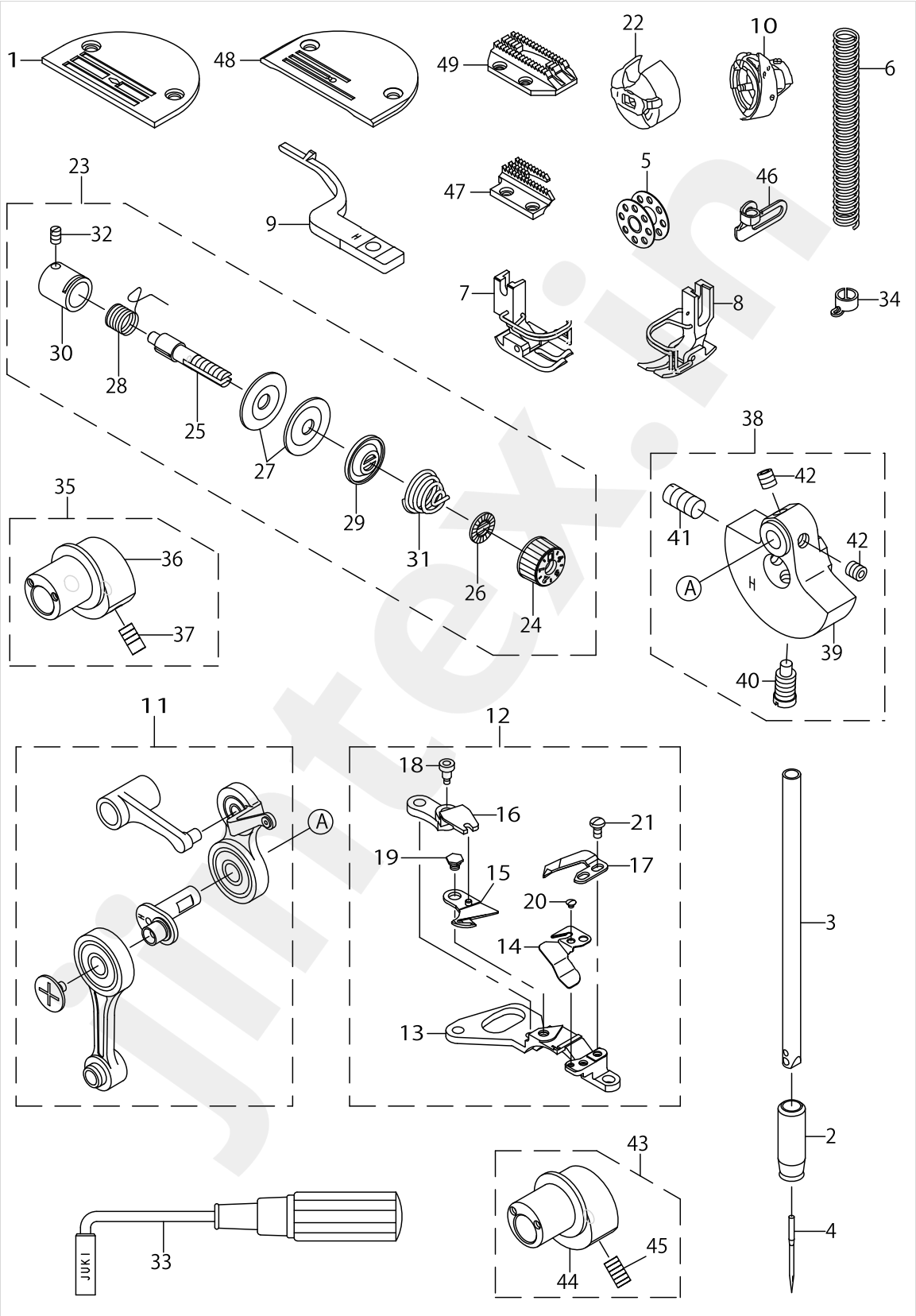
1
48
49
22
10
6
23
9
47
5
46
32
7
8
34
30
28
25
27
29
31
26
24
38
42
41
42
A
39
40
35
36
37
11
A
12
18
16
21
19
15
17
20
14
13
3
2
4
43
45
44
33
JUKI

jintex.in

EXCLUSIVE PARTS DDL-9000B SH

No.	Parts No.	Parts name	Remarks	Level	Cons	Qty
48	11062007	THROAT PLATE A	FOR GG			1
49	11403003	FEED J	FOR AA,BB,EE			1

jintex.in

jintex.in

TABLE & STAND COMPONENTS

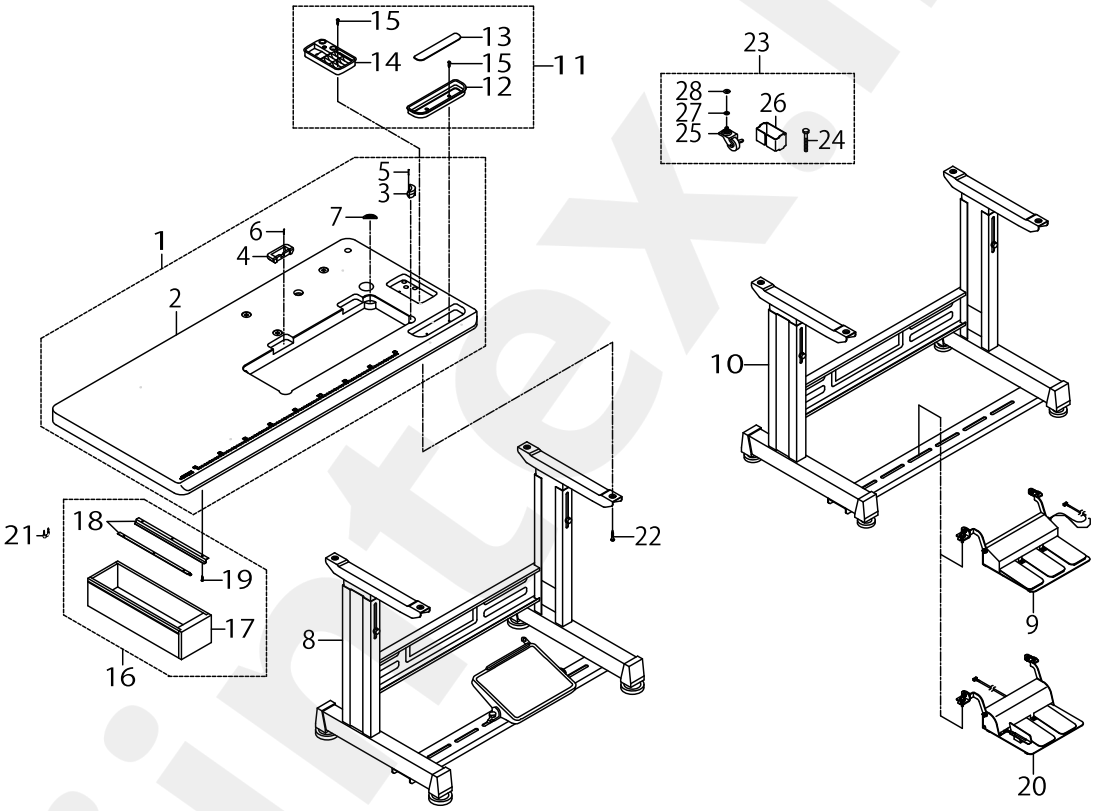

jintex.in

TABLE & STAND COMPONENTS

No.	Parts No.	Parts name	Remarks	Level	Cons	Qty
1	23642259	TABLE ASM.				1
2	23642200	TABLE		*		1
3	11075900	RUBBER SPACER		*		2
4	11075801	RUBBER SPACER		*		2
5	B8210012000	CUSHION SET NAIL		*		4
6	B8210012000	CUSHION SET NAIL		*		4
7	D8226555E00	FRAME RUBBER CUSHION A		*		2
8	11157567	T LEG JUNCTION	FOR JT-D950			1
9	GPK700010A0	3-JOINT PEDAL 70	FOR JT-D95A,-D95B			1
10	11157559	T-STAND ASM.	FOR JT-D95A,-D95B			1
11	11155769	SMALL CASTINGS BOX B ASM.				1
12	11156007	CASE		*		1
13	11155801	CASE MAGNET		*		1
14	11155751	CASE ASM. B		*		1
15	SK3382001SC	WOOD SCREW D=3.8 L=20		*		4
16	11155157	DRAWER ASM.				1
17	11155108	DRAWER		*		1
18	11155207	DRAWER SUPPORT		*		2
19	SK3311600SE	WOOD SCREW D=3.1 L=16		*		6
20	GPK710010A0	2-PEDAL ASM. 71	FOR JT-D95A,-D95B			1
21	D8204555D00	DRAWER STOPPER				1
22	SK3513200SC	WOOD SCREW D=5.1 L=32				4
23	11159456	CASTER ASM.	OPTIONAL PARTS			1
24	SM9086523SE	HEXAGONAL BOLT		*		2
25	11159407	CASTER		*		4
26	11159506	STRUT AUXILIARY PLATE		*		2
27	WS0861410KR	SPRING WASHER 8.6X15X1.4		*		2
28	WP0871602SE	WASHER 8.7X18X1.6		*		2

jintex.in

jintex.in

SPECIAL ORDER PART

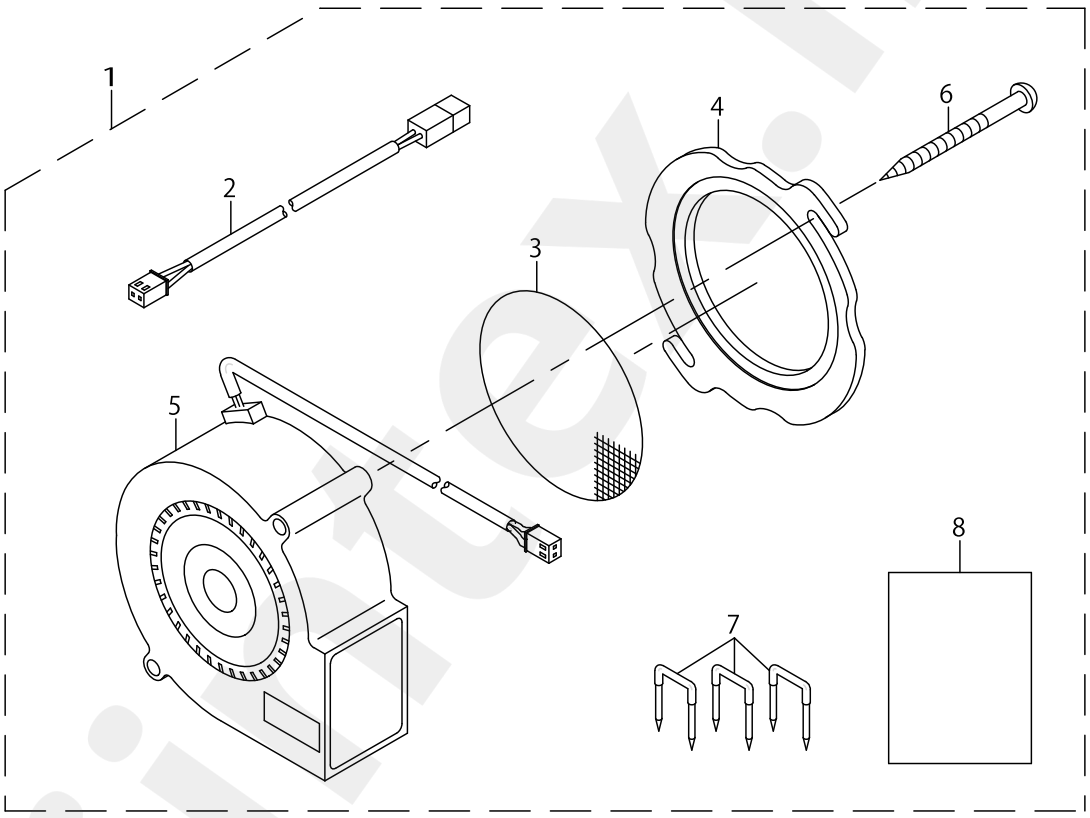

SPECIAL ORDER PART

No.	Parts No.	Parts name	Remarks	Level	Cons	Qty
1	40065571	ELECTRIC FAN HOOK COOLING DEVICE				1
2	40044065	FAN_RELAY_CABLE		*		1
3	40064805	FAN FILTER		*		1
4	40064806	FAN COOLING COVER		*		1
5	40065564	FAN MOTOR ASSY		*		1
6	SK3415001SE	SCREW D=4.1 L=50		*		2
7	MAO11532000	CORD STAPLE		*		3
8	40065572	HOOK COOLING DEVICE INSTRUCTION MANUAL		*		1

jintex.in

jintex.in

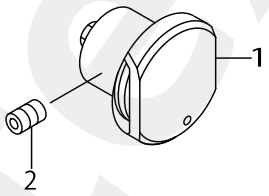

jintex.in

NEEDLE THREAD PRESSER COMPONENTS

No.	Parts No.	Parts name	Remarks	Level	Cons	Qty
1	40131641	THREAD CATCHER ASM.				1
2	SM8040612TP	SCREW M4 L=6				1

jintex.in

jintex.in

LED REVERSE FEED SWITCH COMPONENTS

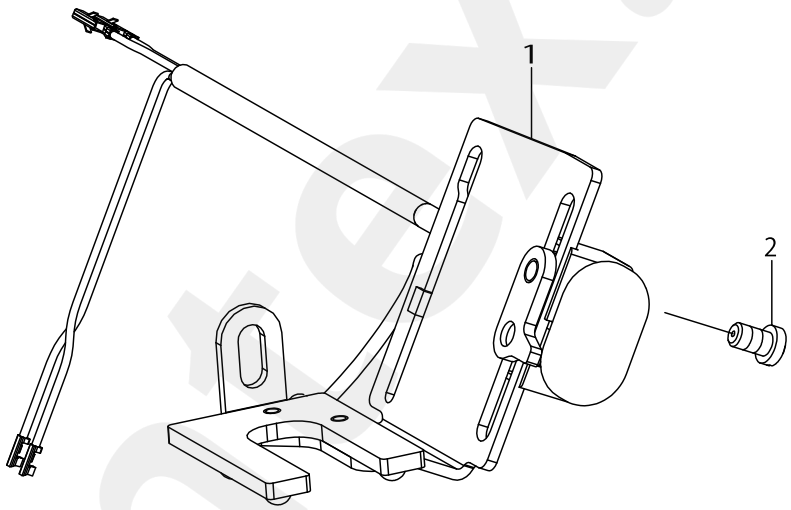

LED REVERSE FEED SWITCH COMPONENTS

No.	Parts No.	Parts name	Remarks	Level	Cons	Qty
1	40163072	LED_BT_SWITCH_ASSY_921				1
2	SM4050655SP	SCREW M5 L=6				1

jintex.in

jintex.in

1.As to "#01" and "#02" refer to the "Note" given at the bottom of the respective pages.

2.Codes on the "Qty" column

・Each numeral indicates the number of parts required.

・"0.1" and "2.5" indicate the length (in meters) of the respective parts.

3.Parentheses mean that the corresponding part is a subpart that constructs an assembly part.

4.Dotted lines on the Figures indicate assembly parts.

5.As to the parts with marks of "☆"(Consumable parts)and "◎"(optional parts)on the respectie parts, it is recommended to prepare spares.

Sign	Place of destination
GG	China
BB	Europe
EE	Japan
AA	excludes China,Europe and Japan

１．リストページの＃０１、＃０２の印は、ページ下の”注記”の説明を参照下さい。

２．数量欄の数字は、個数を表し、０．１、２．５等の数値は、長さ（単位メートル）を表します。

３．数量欄の（　）は、組部品を構成している子部品であることを意味します。

４．イラストページのーーーーー枠は、組構成であることを意味します。

５．リストページの”☆”（消耗部品）、”◎”（オプション部品）の印が付いた部品は、予備を準備しておくことをお奨めします。

記号	仕向地
GG	中国
BB	ヨーロッパ
EE	日本
AA	中国、ヨーロッパ、日本を除く

jintex.in

jintex.in

NUMERICAL INDEX OF PARTS

PART NO	PAGE	REF NO.
11001906	46	1
11015906	20	61
11038650	20	68･69
11038759	20	67
11038759	46	24･28
11040052	44	17
11040409	44	20
11043304	26	17
11062007	50	48
11062601	48	47
11075801	52	4
11075900	52	3
11079506	20	84
11091204	22	7
11092251	48	10
11095502	48	13
11141355	20	68･69
11155108	52	17
11155157	52	16
11155207	52	18
11155751	52	14
11155769	52	11
11155801	52	13
11156007	52	12
11157559	52	10
11157567	52	8
11159407	52	25
11159456	52	23
11159506	52	26
11162104	46	2
11403003	50	49
11409257	48	15
11417615	4	94
11417714	20	85
11419207	26	5
11419405	26	2
11419504	26	10
11419603	26	9
11419702	26	11
11419801	26	12
11419900	26	13
11420106	22	6
11420601	22	5
11420700	22	19
11420809	22	22

PART NO	PAGE	REF NO.
11421104	22	30
11421203	22	31
11421401	24	49
11421500	22	20
11421708	22	39
11497104	22	4
11497302	22	2
13170105	28	6
13171004	28	5
22502504	42	7
22609606	34	19
22886907	8	27･28
22887004	8	27･28
22890206	44	8～10
22890305	44	8～10
22890404	44	8～10
22895908	44	14
22896005	44	21
22896252	44	12
22901201	2	14･15
22901250	2	12･13
22901300	2	16･17
22901805	4	81
22902506	2	30
22902704	2	14･15
22902753	2	12･13
22904106	18	23
22904155	18	22
22906309	8	9
22906408	8	30
22906457	8	29
22907406	12	15
22907802	12	22
22908008	12	8
22908552	12	24
22908909	12	29
22910509	16	11
22911002	18	13
22911101	18	6
22916506	20	60
22916555	20	59
22920300	12	40
22920409	12	41
22920607	4	60
22921209	4	51

PART NO	PAGE	REF NO.
22921308	6	25
22921407	4	52
22921407	6	27
22921506	4	53
22921506	6	28
22921605	4	54
22921704	4	55
22921704	6	29
22921803	4	56
22925101	28	24
22926000	42	16
22926208	42	18
22926356	42	19
22926505	42	15
22931604	42	12･13
22932008	40	6･7
22932404	40	20
22932453	40	19
22932800	42	5
22933105	42	11
22933204	42	6
22934202	40	29
22934251	40	28
22934301	40	30
22934400	40	31
22934509	40	32
22934608	40	33
22944508	2	21
22944508	12	34
22945414	4	62
22945604	4	63
22945703	4	65
22945802	4	66
22947907	44	19
22950000	22	15
22950950	26	6
22951552	2	8
22952501	16	27
22955504	36	36
22955900	36	18
22956007	36	20
22956106	36	9
22956205	36	10
22956304	36	11
22956809	24	61

jintex.in

NUMERICAL INDEX OF PARTS

PART NO	PAGE	REF NO.
22956809	36	12
22956908	36	13
22957005	36	14
22957203	36	15
22958003	42	17
22958052	42	14
22962906	34	6
22963409	4	64
22963458	4	61
22964001	20	72
22964001	42	32
22964001	44	11
23600505	2	4
23601305	4	84
23608003	8	25
23609308	12	12
23609357	12	5
23609456	12	6
23609605	12	7
23609704	12	14
23610207	12	16
23610306	12	17
23610504	14	48
23610652	14	49
23610702	14	51
23611106	12	47
23612609	16	25
23613409	16	39
23613706	16	16
23616006	18	2
23616204	18	20
23616402	18	32
23616600	18	33
23616709	18	14
23618101	18	47
23618309	20	52
23619000	48	36
23619059	48	35
23620008	20	56
23620156	20	57
23620404	20	74
23620503	20	54
23620701	20	62～65
23620800	20	62～65
23620909	20	62～65
23621006	20	62～65
23624505	26	25
23624554	26	24
23626005	4	50
23626005	46	11
23626005	48	24
23626104	4	69
23626203	8	33
23626351	12	42
23626807	12	43
23628803	28	40
23628902	28	36
23629207	28	8
23629256	28	7
23629306	28	10
23629306	46	26
23629405	28	11
23629900	4	82
23630007	16	23
23630007	28	19
23630007	46	29
23630106	28	22
23630403	28	34
23630502	28	35
23631708	32	30
23631757	32	15
23631807	32	31
23631906	32	32
23632003	32	23
23632102	32	26
23632250	32	27
23632359	32	17
23632607	32	33
23632656	32	25
23638109	4	73
23638208	4	74
23638307	4	75
23638406	4	76
23639008	40	5
23639107	40	10
23639156	40	9
23639206	40	13
23639305	40	14
23639404	40	15
23639503	40	16
23639602	40	17
23639701	42	8
23640006	2	47･48
23642200	52	2
23642259	52	1
26260109	6	2
26260208	6	3
26260307	6	4
26260406	6	5
26260505	6	6
26260604	6	7
26260802	6	8
26261008	6	9
26261206	6	10
26261305	6	11
26261503	6	12
26261602	6	13
26261701	6	14
40000264	46	24･28
40000264	48	22
40000344	28	46
40000391	18	37
40000392	18	38
40004171	8	4
40004171	48	40
40006323	44	23
40006323	46	25
40006716	16	46
40009894	48	16
40010434	22	10
40011144	6	15
40013595	28	30
40014837	6	16
40016706	22	8
40023021	6	1
40023022	6	17
40024081	42	12･13
40024124	48	34
40024845	46	14
40024845	48	30
40026277	18	5
40026278	18	31
40026281	18	16
40026282	18	36
40026287	18	41

jintex.in

NUMERICAL INDEX OF PARTS

PART NO	PAGE	REF NO.
40026288	18	43
40029398	22	9
40030786	20	71
40032269	8	46
40034246	28	3
40035589	2	37
40036706	12	32
40036997	22	12
40037005	18	15
40037006	8	16
40037007	8	15
40037008	6	30
40037141	12	19
40037144	12	20
40037146	44	3
40037158	2	1
40037166	28	12
40037192	18	1
40037313	48	23
40037359	12	18
40037365	18	4
40037439	46	9
40037479	46	10
40037488	4	47·48
40037502	28	38
40038328	28	37
40041161	2	2
40042079	18	10
40042086	46	27
40044065	54	2
40044190	48	14
40050581	44	24
40050582	12	39
40050583	12	21
40050586	44	13
40050587	48	12
40050588	44	18
40050589	48	17
40051473	8	12
40051474	8	13
40052819	2	3
40052933	2	45
40053411	48	39
40053720	18	40
40055058	48	38

PART NO	PAGE	REF NO.
40055591	42	10
40055604	48	11
40056622	12	46
40058504	18	9
40060791	26	15
40060792	22	23
40060794	26	14
40060799	22	29
40060801	24	63
40060833	34	12
40061246	18	8
40061486	34	16
40061767	48	3
40062168	24	67
40062180	22	35
40062321	40	1·2
40062323	40	3·4
40063697	48	46
40064805	54	3
40064806	54	4
40064839	48	8
40065564	54	5
40065571	54	1
40065572	54	8
40066590	22	11
40066591	22	14
40066592	22	38
40066602	24	54
40067412	22	1
40067413	22	3
40069097	2	24
40069110	2	20
40069369	48	43
40069370	48	44
40075404	28	23
40077851	36	29
40077852	36	16
40077853	36	2
40082059	28	1
40082078	12	30
40082582	22	37
40082583	24	50
40082584	24	59
40082585	24	51
40082588	22	41

PART NO	PAGE	REF NO.
40082589	24	65
40085784	38	17
40085785	38	18
40085786	38	2
40085787	38	3
40085788	38	4
40085789	38	5
40085790	38	6
40085791	38	7
40085792	38	19
40085793	38	20
40085794	38	8
40085795	38	9
40085796	38	23
40086597	8	1
40086602	44	4·5
40086602	46	22·23
40086604	44	4·5
40086604	46	22·23
40086605	44	1
40086605	46	20
40086606	12	2
40086607	12	3
40086608	16	5
40086609	16	22
40086613	16	45
40086614	16	14
40086615	16	7
40086616	16	13
40086617	16	36
40086618	20	77
40086639	4	49
40086640	4	57
40086643	12	38
40086646	28	32
40086647	28	33
40086648	28	15
40086655	32	34
40086659	4	71
40086660	4	72
40086674	16	17
40086675	16	18
40086676	36	1
40086678	36	17
40086679	36	32

jintex.in

NUMERICAL INDEX OF PARTS

PART NO	PAGE	REF NO.
40086680	36	31
40086690	18	45
40086693	28	41
40086695	16	2
40086696	16	3
40086697	30	48
40086698	32	13
40086699	32	35
40086704	16	8
40086705	16	9
40086706	16	12
40086713	2	6
40086714	2	34
40086716	36	35
40086717	36	19
40086723	36	3
40086724	36	4
40086731	8	24
40086732	2	33
40086735	16	1
40086736	16	37
40086737	16	20
40086738	16	15
40086739	16	21
40086740	20	70
40086741	20	78
40086742	20	79
40086743	18	34
40086744	20	73
40086750	32	1
40086753	32	3
40086757	18	44
40086759	32	37
40086760	12	13
40088958	6	24
40088959	6	26
40089196	8	11
40089263	26	16
40089264	36	6
40089274	44	6
40089323	42	29
40089605	48	1
40089607	20	75
40089610	48	9
40089663	42	1～4
40089665	40	1･2
40089671	40	3･4
40090058	8	32
40091140	42	1～4
40091397	4	91
40091461	2	38
40094561	2	11
40095175	36	5
40095844	32	12
40095847	16	40
40096325	38	21
40096326	38	10
40096327	38	12
40098329	28	31
40098386	4	77
40099736	42	1～4
40099737	42	1～4
40100038	34	8
40100043	34	1
40100046	34	3
40100047	34	22
40100048	34	25
40100050	34	9
40100135	24	62
40100172	34	18
40102087	42	33
40107707	8	26
40107708	48	2
40108401	38	16
40108402	38	1
40113199	22	18
40113200	22	27
40113201	26	1
40113204	26	4
40114043	2	44
40122891	16	42
40123098	16	30
40131641	56	1
40135639	28	2
40135640	28	13
40135803	42	28
40135900	8	37
40135904	8	2
40135905	8	38
40135906	8	40
40135907	8	42
40135916	8	3
40136292	8	18
40136293	8	19
40136700	12	1
40141165	8	39
40141440	8	22
40141443	20	81
40141838	16	33
40141840	16	32
40141841	16	34
40141842	16	29
40141843	46	8
40143184	8	41
40145927	20	58
40149785	28	45
40150011	8	7
40161440	16	31
40161441	16	44
40162657	34	11
40163071	4	92
40163072	58	1
40164902	18	25
B1116210D00	40	8
B1505552000A	48	6
B1521555000	12	23
B15240120BA	12	26
B3114232000	48	31
B3115552000	46	15
B3115552000	48	25
B3118552F00	14	54
B3120125000	46	16
B3120125000	48	26
B3126012000	46	13
B3126012000	48	27
B3128012000	48	28
B3132552000	46	12
B3132552000	48	29
B412352200A	18	28～30
B412352200B	18	28～30
B412352200C	18	28～30
B8210012000	52	6
B8228125000	28	44
B9117012000	42	31
B9117012000	48	5

jintex.in

NUMERICAL INDEX OF PARTS

PART NO	PAGE	REF NO.
B91210120A0	42	20
CM300200001	2	23
CM300200003	2	25
CM301300001	2	29
CM600100101	4	87
CM600100201	42	30
CM600600101	4	88
CQ200000001	28	20
CQ250000001	28	9
CS1000881TP	8	47
D1524555DBB	46	5
D1524555EBL	48	7
D1613155W00	46	4
D2422530D00	22	44
D2468555B00	32	5
D3128555D00	46	18
D3129555D00	46	17
D5119206K0K	14	50
D8204555D00	52	21
D8226555E00	52	7
EA9500B0100	2	78
EA9500B0100	4	78
EA9500B0100	10	50
EA9500B0100	32	28
EA9500B0100	42	9
GPK700010A0	52	9
GPK710010A0	52	20
HK03464000B	26	22
HK03464000B	32	2
HK03464000B	36	7
HW500070000	36	8
J1063000000	48	33
MAO11532000	54	7
MC200500650	42	21～27
MC200500650	46	3･6･7
MC200500750	8	34～36
MC200500750	42	21～27
MC200501300	42	21～27
MDB100B0900	42	21～27
MDB100B0900	46	3･6･7
MDB100B1100	8	34～36
MDB100B1100	42	21～27
MDB100B1100	46	3･6･7
MDB100B1400	8	34～36
MDB100B1400	42	21～27

PART NO	PAGE	REF NO.
MDB100B2100	42	21～27
MDB100B2100	48	4
NM6040000SN	26	20
NM6040001SP	2	42
NM6050001SC	30	51
NM6050001SD	22	32
NM6050001SE	38	25
NM6050001SP	32	10
NM6060001SE	40	11
NM6060003SE	12	31
NS6090310SP	36	21
NS6110310SP	22	45
NS6110310SP	36	22
NS6110350SP	34	7
NS6150310SP	22	17
NS6150310SP	40	22
NS6620310SP	12	44
NS6660410SH	26	18
NS6660430SP	26	19
PS0300062KH	24	56
RC0370411KP	36	23
RC0560711KP	6	18
RC1200001KP	20	83
RC1200001KP	22	47
RC2651218KP	26	8
RE0300000K0	8	43
RE0400000K0	6	19
RE0500000K0	12	45
RE0500000K0	16	24
RE0500000K0	22	40
RE0500000K0	36	24
RE0600000K0	34	13
RE1000000K0	40	24
RE1200000K0	32	4
RO036080200	18	26
RO037180100	12	25
RO037180100	28	39
RO044240100	14	53
RO048190100	28	47
RO068190100	28	16
RO080150200	4	83
RO092270200	16	43
RO098240100	28	25
RO172180100	28	26
RO195240100	28	4

PART NO	PAGE	REF NO.
SB117001200	20	51
SB120001800	20	80
SB120002700	8	21
SB32000060A	20	48～50
SB32000060B	20	48～50
SB32000060C	20	48～50
SD0380551SL	24	48
SD0460703TP	44	22
SD0460703TP	48	18
SD0500131TP	48	19
SD0500251SP	22	53
SD0500251SP	24	53
SD0500402SP	22	43
SD0630275SP	24	58
SD0640321TP	22	36
SD0641456TP	24	57
SD0650321TP	36	25
SD0720331SP	40	25
SD1001506TP	34	10
SK3311600SE	52	19
SK3382001SC	52	15
SK3415001SE	54	6
SK3513200SC	52	22
SL4030631SC	36	26
SL4030641SE	36	27
SL6040892TN	28	42
SL6051492TN	28	43
SL6052092TN	24	60
SL6052592TN	10	49
SL6053592TN	14	52
SL6061292TN	24	64
SL6061292TN	26	23
SL6061292TN	28	27
SM0050801SC	6	32
SM2040750TP	2	28
SM2040955TP	2	27
SM4021201SC	4	79
SM4040601SC	30	49
SM4040655SP	2	36
SM4040655SP	18	42
SM4040655SP	24	55
SM4040855SP	2	22
SM4040855SP	12	36
SM4050501SC	44	2
SM4050501SC	46	21

jintex.in

NUMERICAL INDEX OF PARTS

PART NO	PAGE	REF NO.
SM4050655SP	4	80
SM4050655SP	58	2
SM4050855SP	2	19
SM4050855SP	18	19
SM4051055SP	2	89
SM4051055SP	4	89
SM4051055SP	6	33
SM4051055SP	20	76
SM4051055SP	32	24
SM4051055SP	36	37
SM4051255SP	2	32
SM4051405SE	38	24
SM5040401SE	34	2
SM5040655SN	4	68
SM5040655SN	6	20
SM5040655SN	28	29
SM6040602TP	12	9
SM6050802TP	34	20
SM6051002TP	22	34
SM6051202TP	34	17
SM6051400SP	12	4
SM6051400SP	18	17
SM6051402TP	12	37
SM6051402TP	28	28
SM6051602TP	16	19
SM6051602TP	32	14
SM6051850TP	16	28
SM6052502TP	2	26
SM6061002TP	2	7
SM6061002TP	34	23
SM6061202TP	2	35
SM8040612TP	56	2
SM8040802TP	6	21
SM8050412TP	10	48
SM8050502TP	6	22
SM80506A2TP	8	20
SM80506A2TP	16	4
SM8053002TP	22	33
SM80606A2TP	8	6
SM80606A2TP	16	47
SM80606A2TP	48	42
SM80608A2TP	2	70
SM80608A2TP	4	70
SM80608A2TP	8	44
SM80608A2TP	16	26

PART NO	PAGE	REF NO.
SM80608A2TP	20	82
SM8063012TR	40	12
SM8081652TP	8	5
SM8081652TP	48	41
SM8480652TP	32	36
SM9061203SE	40	34
SM9061853SR	40	27
SM9062053SR	40	21
SM9086523SE	52	24
SQ2050453MZ	28	14
SS2060210SP	44	15
SS2060210SP	48	20
SS4080620TP	18	27
SS4080620TP	44	16
SS4080620TP	48	21
SS4110615SP	36	30
SS6060210SP	2	18
SS6090540SP	36	28
SS6090620TP	18	12
SS6090670TP	8	31
SS6090670TP	18	53
SS6090670TP	20	53
SS6090670TP	22	13
SS6110420TP	44	7
SS6110610TP	4	59
SS6110710TP	18	35
SS6110710TP	22	25
SS6110710TP	26	26
SS6121610SP	18	11
SS6121860SP	16	35
SS6621212TP	22	46
SS7080510TP	8	10
SS7091110TP	12	27
SS7110740TP	22	21
SS7110740TP	32	29
SS8090670SP	4	58
SS8090670SP	46	19
SS8090670SP	48	32
SS8110410TP	22	24
SS8110520TP	26	7
SS8150822TP	18	3
SS8151150TP	18	39
SS8151150TP	48	45
SS8660610TP	18	24
SS8660612TP	26	3

PART NO	PAGE	REF NO.
SS8661012TP	18	66
SS8661012TP	20	66
TA0850604R0	8	51
TA0850604R0	10	51
TA1250406R0	2	43
TA1470704R0	2	41
WP0430800SC	26	21
WP0450826SC	6	23
WP0480856SP	18	18
WP0501016SD	4	86
WP0501016SD	14	55
WP0501016SD	30	50
WP0501016SD	34	21
WP0531000SD	34	15
WP0531001SC	24	66
WP0531001SC	38	15
WP0550800SP	4	90
WP0550800SP	32	7
WP0551016SH	32	9
WP0621016SD	4	93
WP0621016SD	12	33
WP0621016SH	22	16
WP0641601SD	34	24
WP0650876SD	40	18
WP0651001SC	36	34
WP0651056SH	22	28
WP0661016SP	36	33
WP0871602SE	52	28
WP1602616SZ	32	6
WP1612616SE	38	22
WS0510002KN	38	14
WS0610002KN	32	11
WS0861410KR	52	27

jintex.in