JINTEX

Sewing Machine Spare Parts

Juki LBH-1790AN

Sewing Machine Part Book

64 pages

jintex.in | enquiry@jintex.in | +91 96321 55211

33 Park Road, Akkipet Circle, Bangalore

MODEL　: LBH-1790AN,LBH-1795AN
List No : 1706-00

PARTS LIST

Published:12/21/2017

jintex.in

CONTENTS

FRAME & MISCELLANEOUS COVER COMPONENTS (1) 1
FRAME & MISCELLANEOUS COVER COMPONENTS (2) 5
MAIN SHAFT COMPONENTS 9
HOOK DRIVING SHAFT COMPONENTS 13
PRESSER & FEED COMPONENTS 15
PRESSER & FEED COMPONENTS (FOR LBH-1795ANS) 19
NEEDLE BAR ROCKING COMPONENTS 21
NEEDLE THREAD TRIMMER COMPONENTS 23
BOBBIN THREAD TRIMMER COMPONENTS 27
CLOTH CUTTING KNIFE COMPONENTS 31
TABLE COMPONENTS 33
EXCLUSIVE PARTS FOR LBH-1790ANB 35
OPERATION BOX COMPONENTS (ACCESSORIES OF A CONTROL BOX) 37
CONTROL BOX COMPONENTS 39
WIRING DIAGRAM 43
ACCESSORIE PARTS COMPONENTS 45
THREAD STAND COMPONENTS 47
SPECIAL SPECIFICATIONS COMPONENTS (1) 49
SPECIAL SPECIFICATIONS COMPONENTS (2) 51
EXCHANGING PARTS 53
HOW TO MAKE USE OF THIS PARTS LIST 55

jintex.in

jintex.in

FRAME & MISCELLANEOUS COVER COMPONENTS (1)

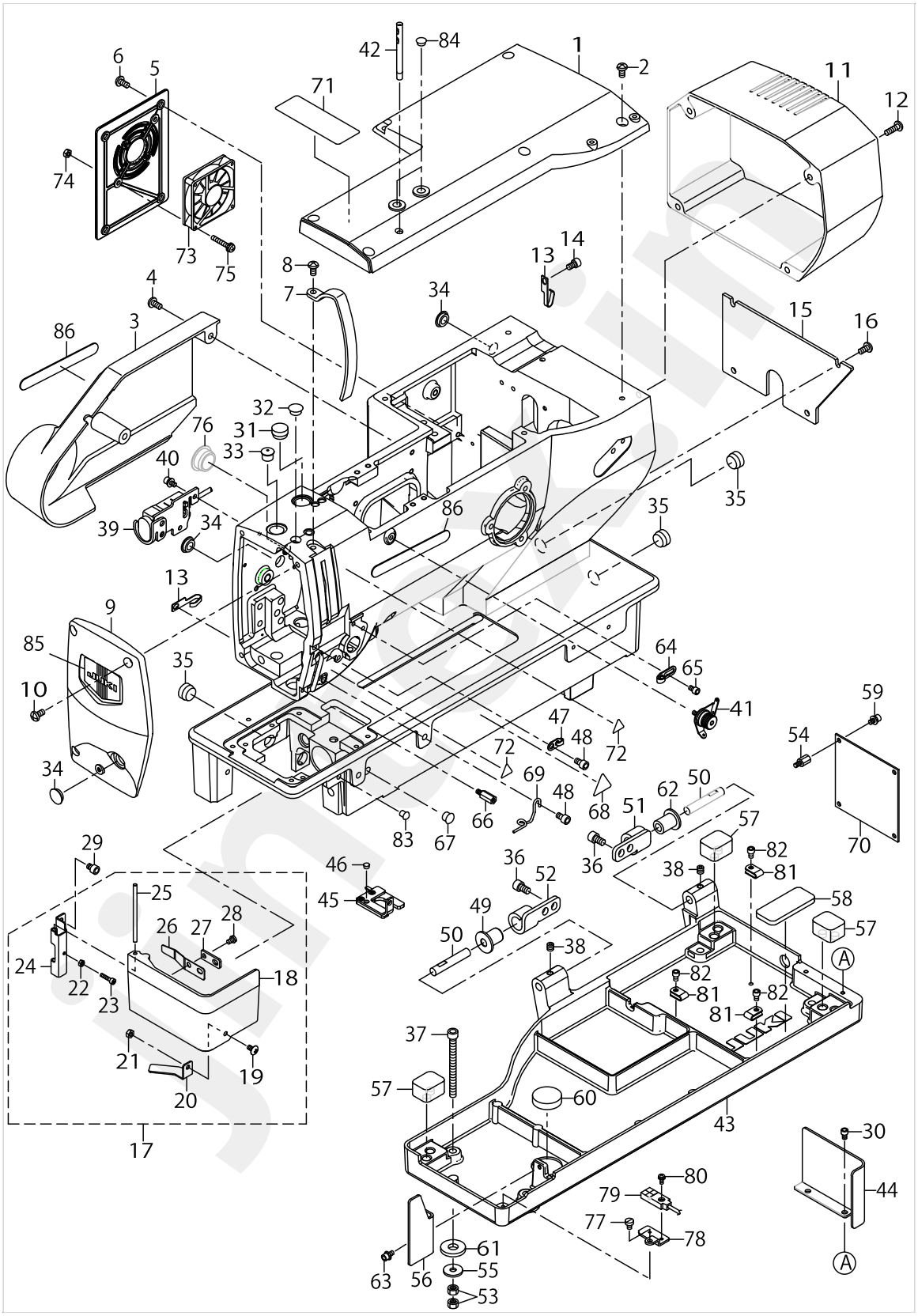

jintex.in

FRAME & MISCELLANEOUS COVER COMPONENTS (1)

No.	Parts No.	Parts name	Remarks	Level	Cons	Qty
1	40189612	UPPER_COVER				1
2	SM4051055SP	SCREW				6
3	40189633	LEFT_COVER				1
4	SM4051055SP	SCREW				2
5	40189613	LEFT_COVER_B				1
6	SM4051055SP	SCREW				4
7	40189616	THREAD_TAKE_UP_LEVER_COVER				1
8	SM4051055SP	SCREW				1
9	40189617	FRONT_COVER				1
10	SM4051055SP	SCREW				3
11	40189615	MOTOR_COVER				1
12	SM4051655SP	SCREW M5 L=16				4
13	26230409	LUBRICATING OIL WICK STOPPER				2
14	SM6050802TP	SCREW M5X0.8 L=8				1
15	40189614	REAR_COVER				1
16	SM4051055SP	SCREW				4
17	40189635	HOOK_OIL_SHIELD_COVER_COMPL				1
18	40189636	HOOK_OIL_SHIELD_COVER		*		1
19	SM0040801SC	SCREW		*		1
20	40145328	SENSOR SLIT PLATE C		*		1
21	NM6040001SC	NUT M4X0.7 TYPE1		*		1
22	NM6030001SD	NUT M3X0.5		*		1
23	SM6031402TP	SCREW		*		1
24	13703806	HOOK OIL SHIELD HINGE		*		1
25	13703905	HINGE PIN		*		1
26	40141710	HINGE_SPRING		*	☆	1
27	40141711	HINGE_SPRING_WASHER		*		1
28	SM4040655SP	SCREW M4 L=6		*		1
29	SM6050652TP	HEXAGON SOCKET HEAD SCREW M5X6				2
30	SM6040602TP	SCREW M4 L=6				2
31	TA1550902R0	PLUG				1
32	TA1050504R0	RUBBER PLUG				1
33	40141795	PBL_METAL_CAP				1
34	TA1250406R0	RUBBER PLUG D=12.5 L=4				3
35	TA1550902R0	PLUG				3
36	SM6061002TP	SCREW M6 L=10	ACCESSORIE PARTS			4
37	SM6067052TP	HEXAGON BOLT				1
38	SM80606A2TP	SCREW M6 L=6				2
39	40189631	SWITCH ASM.				1
40	SL6040892TN	SCREW				2
41	22528764	PRE-TENSION CONTROLLER ASM.				1
42	22502504	THREAD GUIDE BAR	ACCESSORIE PARTS			1
43	40189634	BED_BASE_N				1
44	40189618	BED_REAR_COVER				1
45	40141706	ASSY_LED_DEVICE			☆	1
46	TA0500301R0	PLUG 5X5.8 L=3				1
47	13922208	TAKE-UP THREAD GUIDE B				1

jintex.in

FRAME & MISCELLANEOUS COVER COMPONENTS (1)

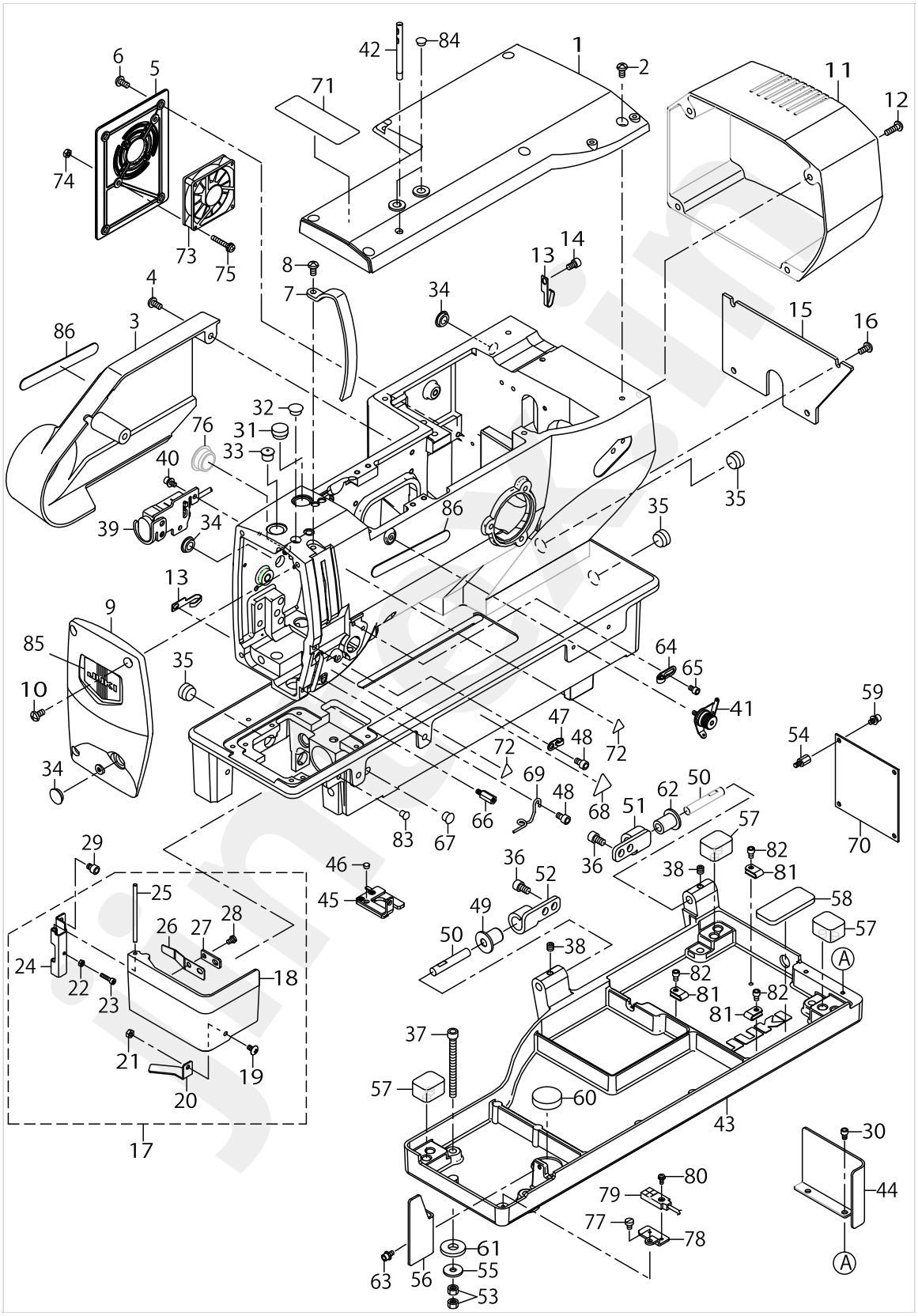

jintex.in

FRAME & MISCELLANEOUS COVER COMPONENTS (1)

No.	Parts No.	Parts name	Remarks	Level	Cons	Qty
48	SM6050802TP	SCREW M5X0.8 L=8				2
49	40006314	HINGE_BUSH	ACCESSORIE PARTS			1
50	13700604	HINGE PIN				2
51	13700406	HINGE PLATE A	ACCESSORIE PARTS			1
52	13700505	HINGE PLATE B	ACCESSORIE PARTS			1
53	NM6060001SD	NUT M6				2
54	KX000000380	SPACER				4
55	WP0612056SD	WASHER 6.1X18.5X2				1
56	13943303	OIL SHIELD	ACCESSORIE PARTS			1
57	40008977	RUBBER C				3
58	40008978	RUBBER D				1
59	SL6040892TN	SCREW				4
60	E2002855000	Z STOPPER RUBBER				1
61	D6056555B00	RUBBER CUSHION (B)				1
62	13700703	RUBBER HINGE	ACCESSORIE PARTS			1
63	SL6040892TN	SCREW	ACCESSORIE PARTS			1
64	40009037	TAKE-UP THREAD GUIDE A				1
65	SM6040602TP	SCREW M4 L=6				1
66	40141713	STUD				1
67	TA0850604R0	RUBBER PLUG				1
68	CM300200003	ATTENTION LABEL				1
69	13705405	NEEDLE BAR THREAD GUIDE				1
70	40138611	INT PCB ASSY				1
71	CM301300001	SAFETY LABEL				1
72	CM300200001	ATTENTION SEAL				2
73	40111214	FAN MOTOR ASSY				1
74	NM6040001SC	NUT M4X0.7 TYPE1				2
75	SL4042591SC	SCREW M4 L=25				2
76	TA2100904R0	RUBBER PLUG				1
77	SM6040650TP	SCREW				1
78	40145327	SENSOR PALTE C				1
79	40141483	COVER SENSOR ASSY				1
80	SL4030881SC	SCREW M3 L=8				1
81	HX001500000	CLIP				3
82	SM6040602TP	SCREW M4 L=6				3
83	TA0550604R0	RUBBER PLUG				1
84	TA0750404R0	PLUG D=7.5 L=3.5				2
85	40172374	FACE_COVER_PLATE				1
86	40172375	EMBLEM_JUKI_SMART_SOLUTIONS				2

jintex.in

FRAME & MISCELLANEOUS COVER COMPONENTS (2)

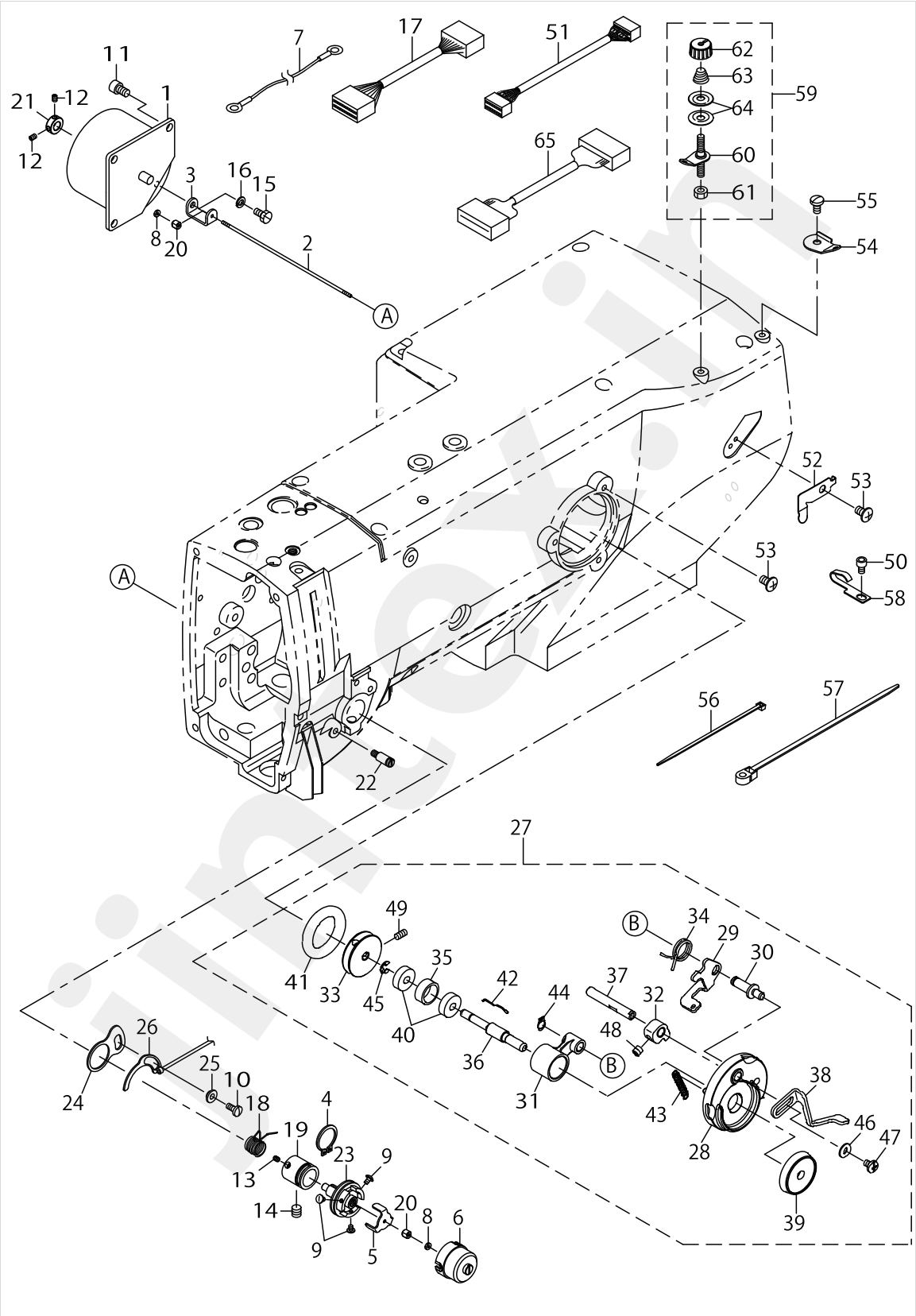

jintex.in

FRAME & MISCELLANEOUS COVER COMPONENTS (2)

No.	Parts No.	Parts name	Remarks	Level	Cons	Qty
1	40006261	ASSY_AT_SOLENOID				1
2	40006263	AT_SHAFT				1
3	40006264	AT_SHAFT_HOLDER				1
4	RC1700001KP	RETAINING RING				1
5	40010514	DISK_STOPPER				1
6	40010511	DISK_STOPPER_HOLDER_CAP				1
7	14115554	HEAD GROUND CABLE A ASM.				1
8	40010522	SHAFT_NUT				2
9	SM0860400SN	SCREW				3
10	SM6040860TP	SCREW M4 L=8				1
11	SM6050802TP	SCREW M5X0.8 L=8				3
12	SM8030412TP	SCREW				2
13	SM8030412TP	SCREW				1
14	SM80606A2TP	SCREW M6 L=6				1
15	SM9040800SP	SCREW				1
16	WS0410002KP	SPRING WASHER				1
17	40141478	INT CORE B ASSY				1
18	10006104	TAKE-UP SPRING			☆	1
19	40010510	THREAD_TENSION_POST_BASE				1
20	40010512	THREAD_TENSION_SHAFT_COLLAR				2
21	32055402	THRUST COLLAR				1
22	40004252	UTT_SUSPENSION_SCREW_9				1
23	40006265	ASSY_THREAD_TENSION_POST				1
24	B2702210000	GUIDE PLATE				1
25	B2703210000	BUSHING				1
26	40003499	THREAD BREAK DETECTOR A				1
27	40189628	ASSY_BTW				1
28	40189600	BTW_BASE		*		1
29	26260208	BTW_CAM_PLATE		*		1
30	26260307	BTW_BASE_SHAFT		*		1
31	26260406	BTW_SHAFT_BASE		*		1
32	26260505	BTW_CAM_LEVER		*		1
33	26260604	BTW_WHEEL		*		1
34	40011144	BTW_TORSION_SPRING		*		1
35	26260802	BTW_BEARING_SPACER		*		1
36	40011145	BTW_SHAFT		*		1
37	40011146	BTW_LEVER_SHAFT		*		1
38	40021933	BTW_LEVER		*		1
39	26261206	BTW_SPACER		*		1
40	26261305	BTW_BEARING		*		2
41	26261503	BTW_WHEEL_RUBBER		*	☆	1
42	26261602	BOBBIN_SPRING		*	☆	1
43	26261701	BTW_SPRING		*		1
44	RC0560711KP	RETAINING RING		*		1
45	RE0400000K0	E-RING 4		*		1
46	WP0450826SC	WASHER 4.5X10X0.8		*		1
47	SM5040655SN	SCREW		*		1

jintex.in

FRAME & MISCELLANEOUS COVER COMPONENTS (2)

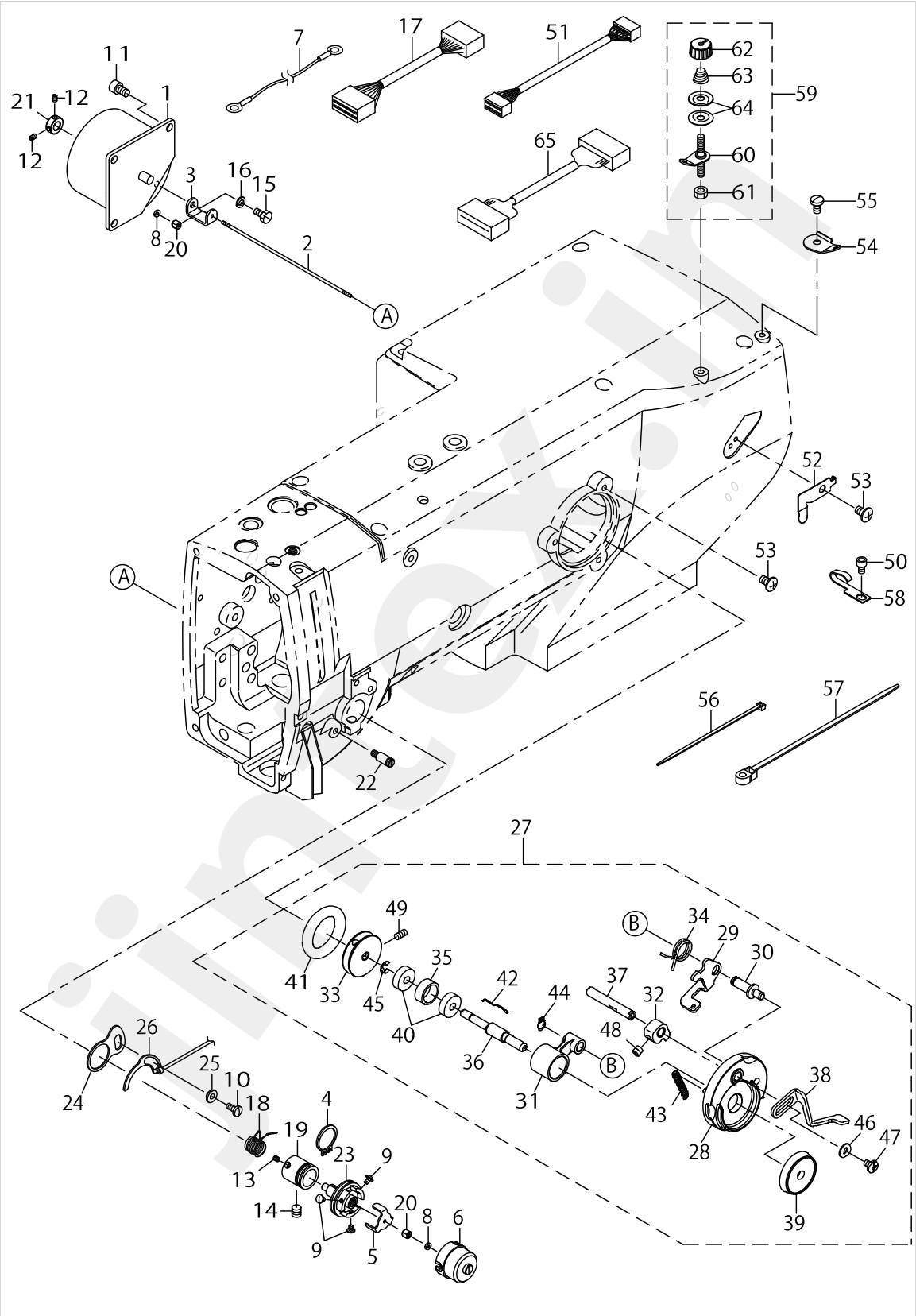

FRAME & MISCELLANEOUS COVER COMPONENTS (2)

No.	Parts No.	Parts name	Remarks	Level	Cons	Qty
48	SM8050502TP	SCREW M5 L=5		*		1
49	SM8040802TP	SCREW M4X8		*		2
50	SM6040602TP	SCREW M4 L=6				2
51	40141479	INT CORD C ASSY				1
52	40037008	THREAD_CUTTER			☆	1
53	SM0050801SC	SCREW				4
54	D3162555B00	THREAD GUIDE				1
55	SS7110840SP	SCREW 11/64-40 L=7.8				1
56	EA9500B0100	CABLE BAND				10
57	HX00151000A	CABLE BAND				2
58	26230409	LUBRICATING OIL WICK STOPPER				3
59	22529481	BOBBIN THREAD TENSION ASM.				1
60	22529473	BOBBIN THREAD TENSION ROD ASM.		*		1
61	NS6110310SP	NUT 11/64-40		*		1
62	11072402	THREAD TENSION NUT		*		1
63	11093606	THREAD TENSION SPRING		*		1
64	B3214047000	BOBBIN WINDER TENSION DISC		*		2
65	40141477	INT CORD A ASSY				1

jintex.in

jintex.in

MAIN SHAFT COMPONENTS

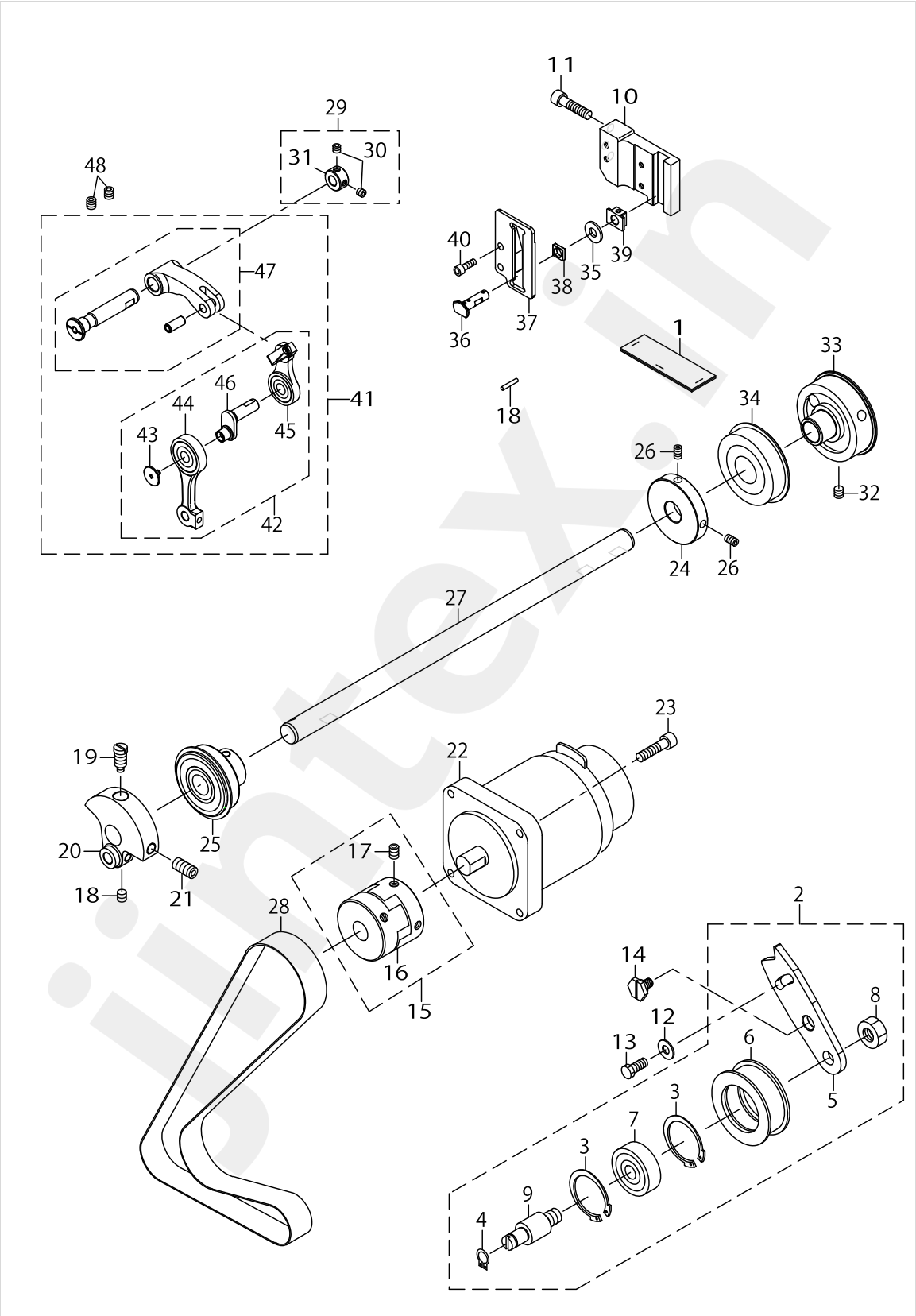

MAIN SHAFT COMPONENTS

No.	Parts No.	Parts name	Remarks	Level	Cons	Qty
1	40011517	NEEDLE_BAR_CRANK_FELT				1
2	40142152	IDLER_ASSY				1
3	RC3781518KP	RETAINING RING		*		2
4	RC0100001KP	SNAP RING M10		*		1
5	40143150	IDLER FIXED PLATE		*		1
6	40141721	IDLER_PULLEY		*		1
7	SB110000700	BALL BEARING		*		1
8	NM6100001SD	NUT M10		*		1
9	40141720	IDLER_SHAFT		*		1
10	40006307	SQUARE_BLOCK_GUIDE				1
11	SM6062502TP	SCREW M6 L=25				3
12	WP0621046SP	WASHER				1
13	SM9061403CP	SCREW M6 L=14				1
14	40004185	HINGE_SCREW				1
15	40051473	COUPLING ASM.				1
16	40051474	COUPLING		*		1
17	SM80608A2TP	SCREW M6 L=8		*		4
18	CQ252000000	OIL WICK				0.014
19	40004171	COUNTER_WEIGHT_SCREW				1
20	40141716	COUNTER_WEIGHT				1
21	SM8081652TP	SCREW M8 L=16				1
22	40138137	IPM550W MOTOR				1
23	SM6052002TR	SCREW M5 L=20				4
24	40010534	BTW_DRIVING_WHEEL				1
25	40150011	FRONT_BEARING				1
26	40010535	DRIVING_WHEEL_SCREW				2
27	40141717	MAIN_SHAFT				1
28	40141719	TIMING_BELT				1
29	40032269	THRUST COLLAR				1
30	SM80506A2TP	SCREW M5 L=6		*		2
31	CS1000881TP	THRUST COLLAR		*		1
32	SM80606A2TP	SCREW M6 L=6				2
33	40141718	SPROCKET_A				1
34	SB1200008C0	BEARING				1
35	40008423	WASHER				1
36	40165704	NEEDLE CRANK SHAFT				1
37	40165701	SQUARE BLOCK GUIDE B				1
38	40165703	SQUARE BLOCK B				1
39	40004206	SQUARE_BLOCK				1
40	SM6041202TP	SCREW M4X0.7 L=12				2
41	40141725	THREAD_TAKE_UP_COMP				1
42	40141726	THREAD_TAKE_UP_ASM_C		*		1
43	22918304	SCREW		*		1
44	40142880	NEEDLE_BAR_CRANK_ROD_ASM.		*		1
45	40141727	THREAD_TAKE_UP_ASM_B		*		1
46	40141730	NEEDLE_BAR_CRANK		*		1
47	40142878	TAKE_UP_CRANK_ASM.		*		1

jintex.in

MAIN SHAFT COMPONENTS

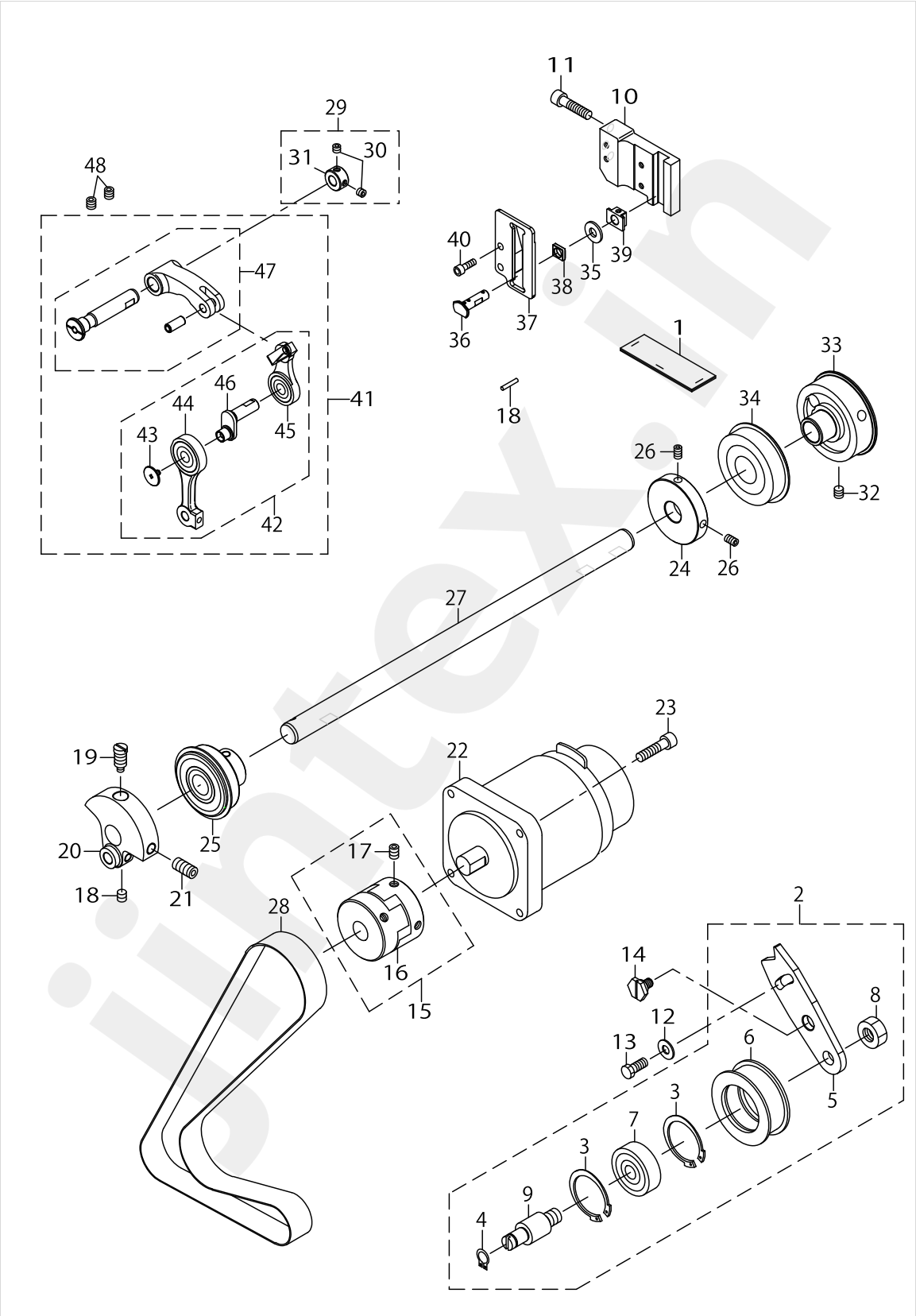

MAIN SHAFT COMPONENTS

No.	Parts No.	Parts name	Remarks	Level	Cons	Qty
48	SM80608A2TP	SCREW M6 L=8				2

jintex.in

jintex.in

HOOK DRIVING SHAFT COMPONENTS

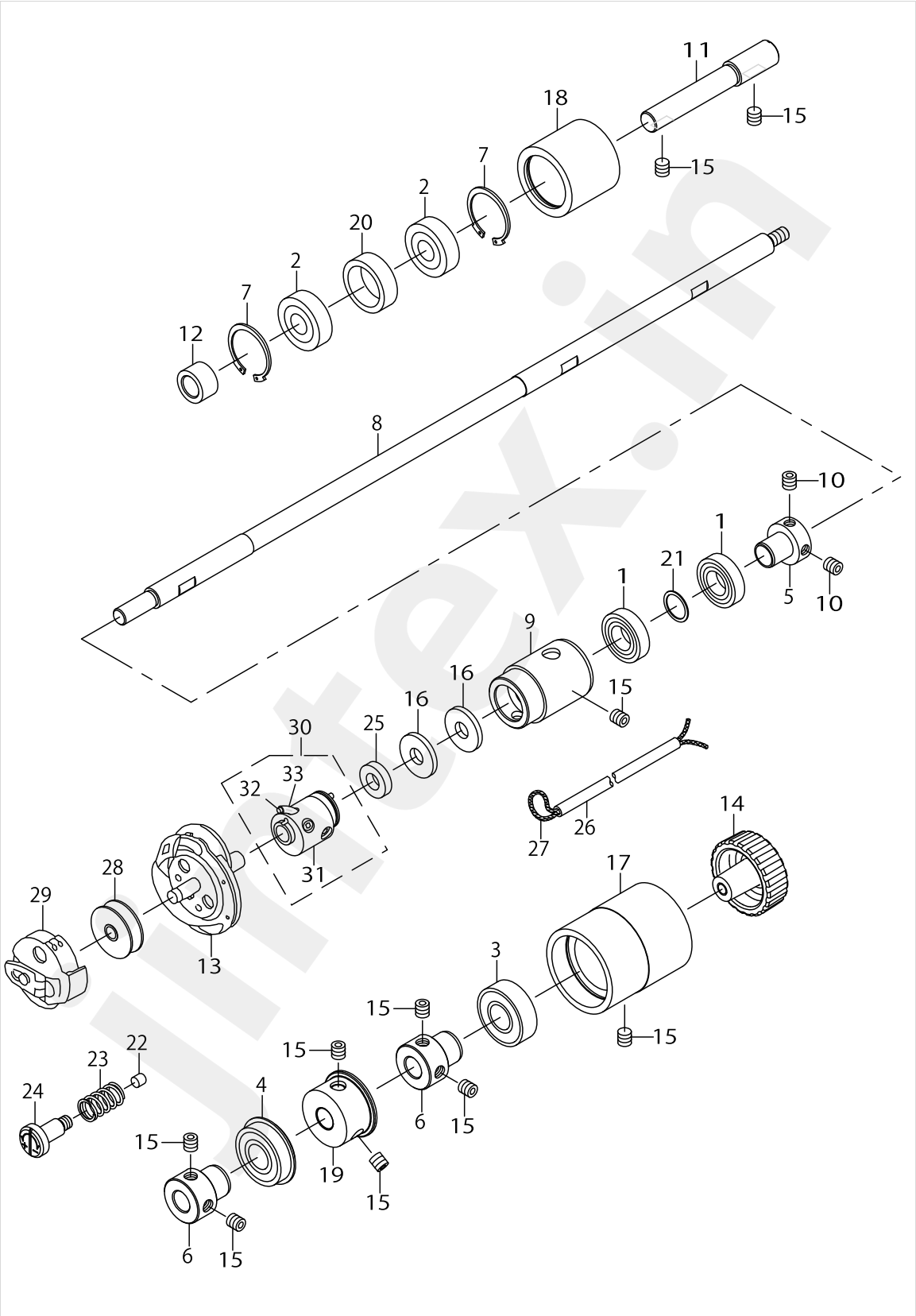

HOOK DRIVING SHAFT COMPONENTS

No.	Parts No.	Parts name	Remarks	Level	Cons	Qty
1	SB112001600	BEARING				2
2	SB110000600	BALL BEARING				2
3	SB115000200	BEARING				1
4	SB115001500	BEARING				1
5	40004188	BEARING_SUPPORT				1
6	23536204	BUSH				2
7	RC2791218KP	RETAINING RING				2
8	40004186	HOOK_DRIVING_SHAFT				1
9	40004187	HOOK_DRIVING_SHAFT_METAL				1
10	SM8050502TP	SCREW M5 L=5				2
11	13710306	INTERMEDIATE SPROCKET SHAFT				1
12	13710504	INTERMEDIATE SPROCKET WASHER				1
13	13729066	HOOK COMPL.			☆	1
14	40141739	LOWER_SHAFT_KNOB_B				1
15	SM80606A2TP	SCREW M6 L=6				10
16	40011355	OIL_FILTER				2
17	14504401	BEARING SUPPORT				1
18	40004180	SPROCKET_B				1
19	40141740	SPROCKET_C				1
20	13710405	INTERMEDIATE SPROCKET RING				1
21	40006317	WASHER				1
22	40142753	ADJUSTING_PIN_B				1
23	40142754	ADJUSTING_SPRING_B				1
24	40142752	ADJUSTING_SCREW_B				1
25	40006320	FELT				1
26	23630007	TUBE				1
27	CQ202000000	OIL WICK				1
28	B1811771000	BOBBIN			☆	1
29	13729769	BOBBIN CASE ASM.			☆	1
30	13729652	HOOK SLEEVE CONNEC.				1
31	13729603	HOOK SLEEVE		*		1
32	CQ252000000	OIL WICK		*		0.04
33	HX002550000	TUBE		*		0.017

jintex.in

jintex.in

PRESSER & FEED COMPONENTS

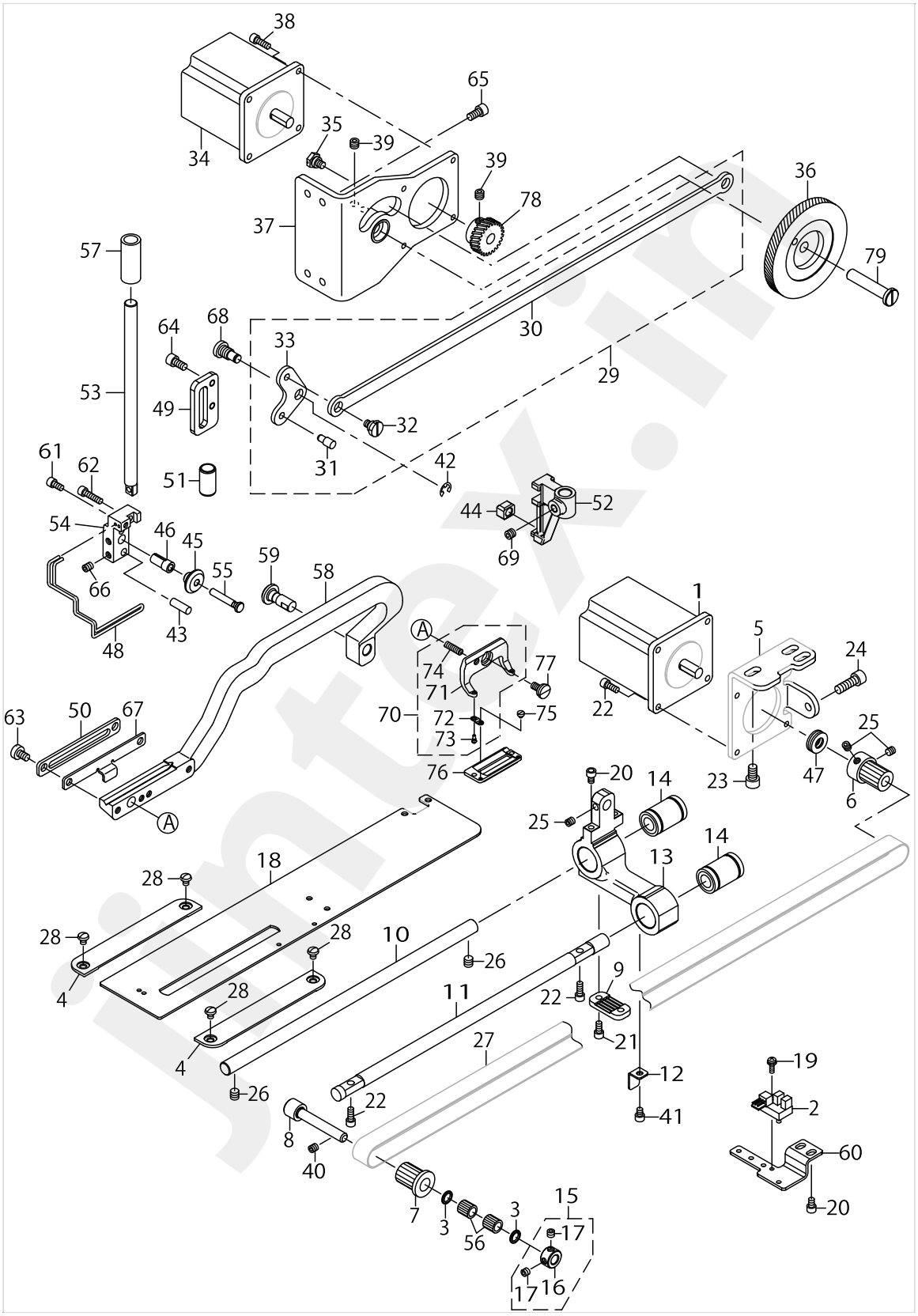

PRESSER & FEED COMPONENTS

No.	Parts No.	Parts name	Remarks	Level	Cons	Qty
1	40139181	FEED MOTOR ASSY				1
2	HD00057000A	PHOTO SENSOR				1
3	22891204	BEARING SUPPORT				2
4	40075297	THROAT_PLATE_BASE_COVER				2
5	40004194	MOTOR_BRACKET				1
6	40108754	PULLEY_B				1
7	40004197	PULLEY_C				1
8	40004198	SUPPORT_SHAFT				1
9	40004200	TIMING_BELT_HOLDER				1
10	40004201	FEED_SHAFT				1
11	40022121	FEED_GUIDE_SHAFT				1
12	40141744	SENSOR_SLIT_PLATE				1
13	40141741	FEED_BASE				1
14	SB710000600	BEARING				2
15	40010434	THRUST_COLLAR_ASM.				1
16	40010435	THRUST_COLLAR		*		1
17	SM8050412TP	SCREW M5 L=4		*		2
18	40004205	WORK_CLAMP_CARRIER				1
19	SL4031091SC	SCREW M3 L=10				1
20	SM6040602TP	SCREW M4 L=6				4
21	SM6040802TP	SCREW M4X0.7 L=8				2
22	SM6041002TP	SCREW M4 L=10				6
23	SM6061002TP	SCREW M6 L=10				3
24	SM6061802TP	SCREW M6 L=18				1
25	SM8050502TP	SCREW M5 L=5				3
26	SM80606A2TP	SCREW M6 L=6				2
27	40141742	TIMING_BELT				1
28	SM5040550TP	SCREW M4 L=5				4
29	40142161	LIFTING_LINK_ASSY				1
30	40141788	LINK_ROD_S		*		1
31	40141801	LIFTING_LINK_PIN		*		1
32	SD0800326TP	SHOULDER SCREW		*		1
33	40142755	LIFTING_LINK		*		1
34	40139182	CLAMP MOTOR ASSY				1
35	SD0800326TP	SHOULDER SCREW				1
36	40004289	ASSY PBL GEAR L				1
37	40004267	ASSY_PBL_MOTOR_BASE				1
38	SM6041202TP	SCREW M4X0.7 L=12				4
39	SM8060552TP	SCREW M6 L=5				5
40	SM8050502TP	SCREW M5 L=5				1
41	SM6040502TP	SCREW M4X0.7 L=5				1
42	RE0500000K0	E-RING				1
43	13127402	PIN (SHORT) C				1
44	40141757	SQUARE_BLOCK				1
45	40141755	SLIDE_ROLLER				1
46	40141754	COLLAR				1
47	SB408000100	BEARING				1

jintex.in

PRESSER & FEED COMPONENTS

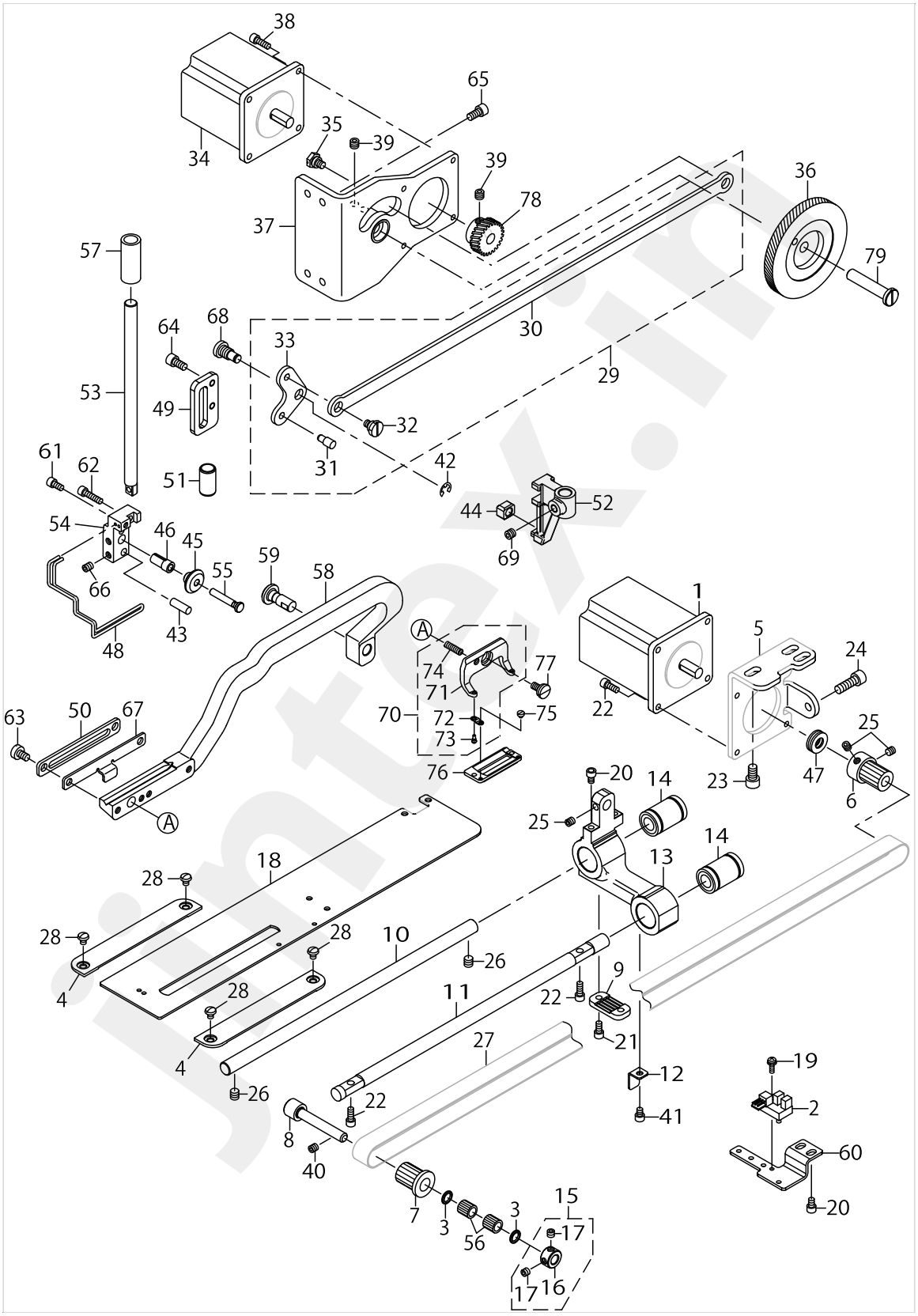

PRESSER & FEED COMPONENTS

No.	Parts No.	Parts name	Remarks	Level	Cons	Qty
48	40004285	PBL_FINGER_GUARD			☆	1
49	40141794	PBL_GUIDE				1
50	40004280	PBL_LIFTING_PLATE				1
51	40004279	PBL_METAL				1
52	40141747	POSITION_BRACKET				1
53	40141745	PRESSER_BAR				1
54	40141753	PBL_ROLLER_BASE				1
55	40141756	PBL_ROLLER_SHAFT				1
56	SB307000200	BEARING				2
57	40141746	METAL_U				1
58	40004287	PBL_WORK_CLAMP_ARM				1
59	40004288	PBL_WORK_CLAMP_ARM_SHAFT				1
60	40141743	SENSOR_PLATE				1
61	SM6040802TP	SCREW M4X0.7 L=8				1
62	SM6041602TP	SCREW M4X0.7 L=16				1
63	SM6050800SP	SCREW M5 L=8				2
64	SM6051002TP	SCREW M5X0.8 L=10				4
65	SM6051002TP	SCREW M5X0.8 L=10				4
66	SM8050602TP	SCREW M5 L=6				2
67	40020310	UTT_CLOSE_CAM_B				1
68	40141748	LIFTING_LINK_SHAFT				1
69	SM8060612TP	SCREW M6 L=6				1
70	D1511771KA0A	WORK CLAMP CHECK HOLDER ASM.				1
71	B1511771000B	PRESSER FOOT		*		1
72	B1509761000	WORK CLAMP CHECK SPRING		*		2
73	B151077100B	WORKCLAMPCHECKSPRINGSETPIN(B)		*		2
74	B1512761000	WORK CLAMP CHECK HOLDER SPRING		*		1
75	SS6060210SP	SCREW 3/32-56 L=1.9				2
76	B1552781000A	PRESSER			☆	1
77	SD0790203SP	HINGE SCREW D=7.94 H=2				1
78	40004291	PBL GEAR S				1
79	40004275	PBL_GEAR_SHAFT				1

jintex.in

PRESSER & FEED COMPONENTS (FOR LBH-1795ANS)

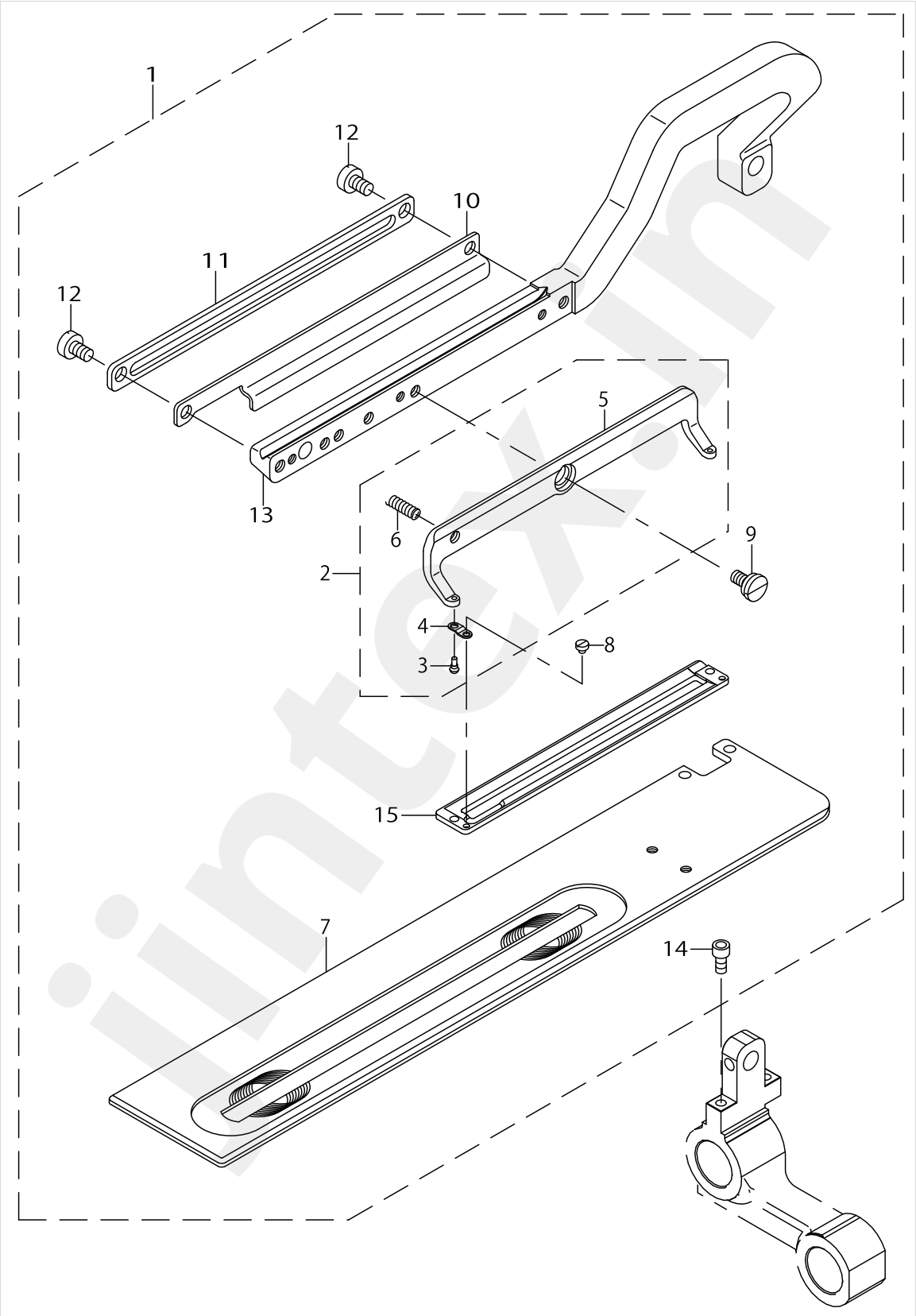

PRESSER & FEED COMPONENTS (FOR LBH-1795ANS)

No.	Parts No.	Parts name	Remarks	Level	Cons	Qty
1	40067165	LIFTING PLATE PARTS 120MM				1
2	40008646	ASSY_WORK_CLAMP_CHECK_HOLDER_120		*		1
3	B151077100B	WORKCLAMPCHECKSPRINGSETPIN(B)		*		2
4	B1509761000	WORK CLAMP CHECK SPRING		*		2
5	40008647	WORK_CLAMP_CHECK_HOLDER_120		*		1
6	40008638	WORK_CLAMP_CHECK_HOLDER_SPRING B		*		1
7	40006339	WORK_CLAMP_CARRIER_120		*		1
8	SS6060210SP	SCREW 3/32-56 L=1.9		*		6
9	SD0790203SP	HINGE SCREW D=7.94 H=2		*		3
10	40028682	UTT_CLOSE_CAM_120B		*		1
11	40112711	LIFTING_PLATE_120		*		1
12	SM6050800SP	SCREW M5 L=8		*		2
13	40006335	WORK_CLAMP_ARM_120		*		1
14	SM6040802TP	SCREW M4X0.7 L=8		*		2
15	40008658	WORK_CLAMP_120		*	☆	1

jintex.in

jintex.in

NEEDLE BAR ROCKING COMPONENTS

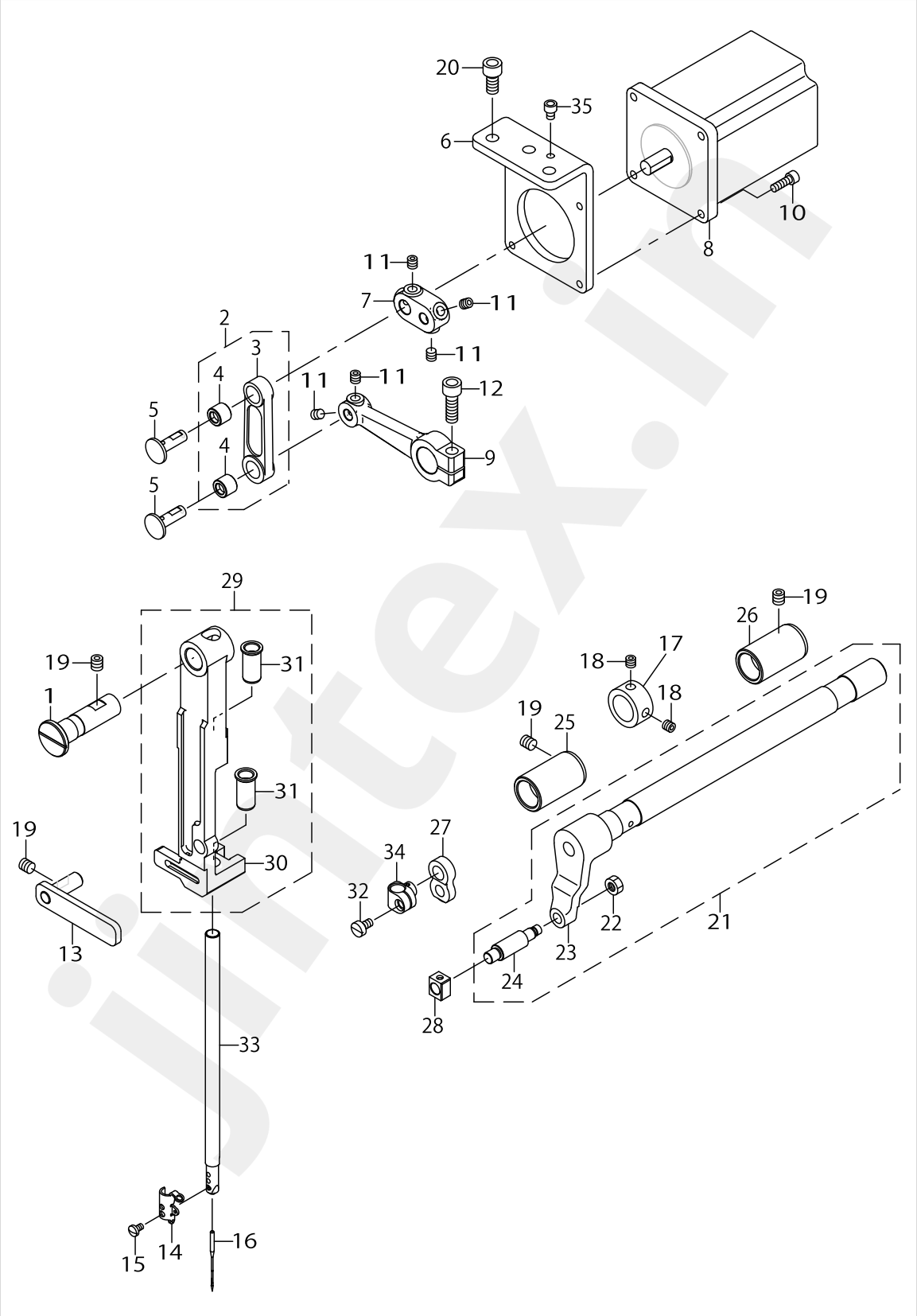

NEEDLE BAR ROCKING COMPONENTS

No.	Parts No.	Parts name	Remarks	Level	Cons	Qty
1	40088990	SUPPORT_SHAFT				1
2	40004378	ZIGZAG ROD ASM.				1
3	40004379	ZIGZAG ROD		*		1
4	23530405	SHAFT HOLDER LINK BUSH		*		2
5	40008671	P=JUNCTION SHAFT SELECTIVE PARTS	SELECTIVE PARTS			2
6	40141758	ZIGZAG_DRIVE_UNIT_BASE				1
7	40141759	MOTOR_LEVER				1
8	40139180	NEEDLE SWING MOTOR ASSY				1
9	40141760	ZIGZAG_LEVER_REAR				1
10	SM6041202TP	SCREW M4X0.7 L=12				4
11	SM8050502TP	SCREW M5 L=5				6
12	SM6061802TP	SCREW M6 L=18				1
13	40004218	FRAME SUPPORT PLATE ASM.				1
14	13706403	NEEDLE BAR THREAD GUIDE			☆	1
15	SM7030550TP	SCREW M3 L=4.5			☆	1
16	MDP5J0B1100	NEEDLE DPX5 #11J			☆	1
17	CS1501181TP	THRUST COLLAR D=15 W=11				1
18	SM8050502TP	SCREW M5 L=5				2
19	SM80606A2TP	SCREW M6 L=6				4
20	SM6061202TP	SCREW M6 L=12				3
21	40004224	ZIGZAG LEVER SHAFT ASM.				1
22	NM6050001SP	NUT M5		*		1
23	40004373	ZIGZAG LEVER SHAFT		*		1
24	40004374	ZIGZAG_STUD		*		1
25	40004216	BUSHING				1
26	40004217	BUSHING REAR				1
27	40004209	NEEDLE_BAR_ROD				1
28	B1414232000	SQUARE BLOCK				1
29	40004222	NEEDLE_BAR_FRAME_ASSY				1
30	40004212	NEEDLE_BAR_FRAME		*		1
31	40004213	NEEDLE BAR METAL		*		2
32	SM6040750TP	SCREW M4 L=7				1
33	40004215	NEEDLE BAR				1
34	40004214	NEEDLE_BAR_CONNECTION				1
35	SM6040502TP	SCREW M4X0.7 L=5				1

jintex.in

jintex.in

NEEDLE THREAD TRIMMER COMPONENTS

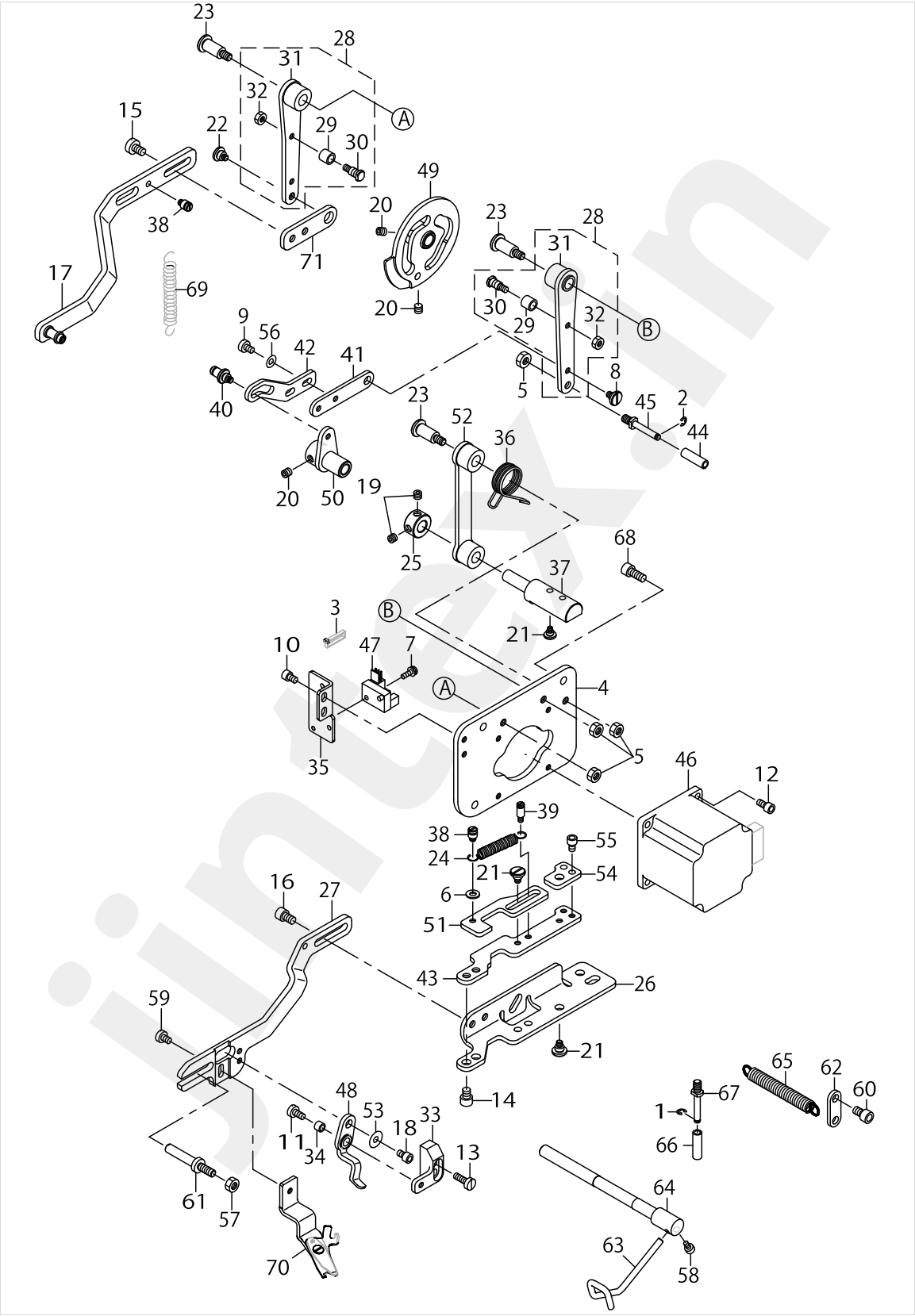

NEEDLE THREAD TRIMMER COMPONENTS

No.	Parts No.	Parts name	Remarks	Level	Cons	Qty
1	RE0300000K0	E-RING 3				1
2	RE0300000K0	E-RING 3				1
3	EA9500B0100	CABLE BAND				1
4	40004293	UTT BASE PLATE				1
5	NM6050001SP	NUT M5				4
6	WP0430801SC	WASHER 4.3X9X0.8				1
7	SL4031091SC	SCREW M3 L=10				1
8	SD0600266TP	SHOULDER SCREW D=6 H=2.6				1
9	SM6040600SP	SCREW M4 L=6				2
10	SM6040602TP	SCREW M4 L=6				2
11	SM6040860TP	SCREW M4 L=8				1
12	SM6040802TP	SCREW M4X0.7 L=8				4
13	SM6041200SP	SCREW M4 L=12				2
14	SM6050652TP	HEXAGON SOCKET HEAD SCREW M5X6				2
15	SM6050800SP	SCREW M5 L=8				2
16	SM6050802TP	SCREW M5X0.8 L=8				2
17	40004400	ASSY UTT RELEASE ARM B				1
18	SM6040602TP	SCREW M4 L=6				1
19	SM8050412TP	SCREW M5 L=4				2
20	SM8050502TP	SCREW M5 L=5				4
21	SD0600326TP	SHOULDER SCREW D=6 H=3.2				4
22	SD0800406TP	SHOULDER SCREW D=8 H=4				1
23	SD0801506TP	SHOULDER SCREW D=8 H=15				3
24	11272507	SPRING				1
25	CS0800881TP	THRUST COLLAR				1
26	40004235	UTT ARM A				1
27	40004238	UTT_ARM_B				1
28	40101641	ASSY_UTT_CAM_ARM				2
29	40004254	UTT CAM ROLLER		*		1
30	40101638	UTT_CAM_ROLLER_SHAFT		*		1
31	40101642	UTT_CAM_ARM		*		1
32	NM6040000SN	NUT M4		*		1
33	40004264	UTT RELEASE LEVER BASE				1
34	40004265	UTT RELEASE LEVER SHAFT				1
35	40141774	SENSOR_PLATE_UTT				1
36	40004296	UTT_SUPPORT_ARM_SPRING				1
37	40004234	UTT SUPPORT SHAFT				1
38	40004248	UTT SUSPENSION SCREW 4				2
39	40004252	UTT SUSPENSION SCREW 9				1
40	40004247	UTT SUSPENSION SHOULDER SCREW				1
41	40004244	UTT THREAD PULLING LINK A				1
42	40004245	UTT THREAD PULLING LINK B				1
43	40004236	UTT X-CAM				1
44	40004297	UTT Y-DRIVE ROLLER				1
45	40004298	UTT Y-DRIVE SHAFT				1
46	40140040	UTT TRIM MOTOR ASSY				1
47	HD00057000A	PHOTO SENSOR				1

jintex.in

NEEDLE THREAD TRIMMER COMPONENTS

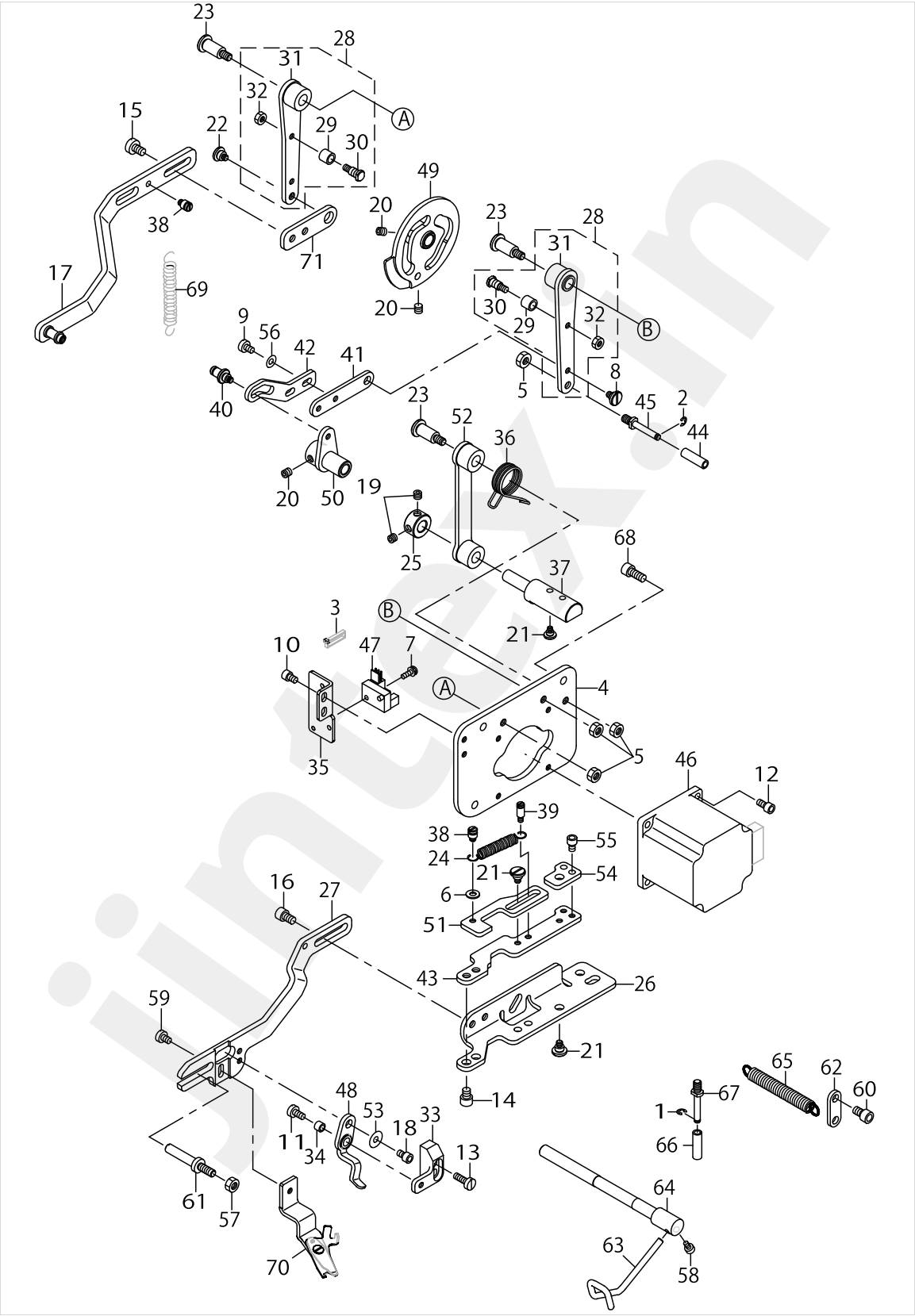

NEEDLE THREAD TRIMMER COMPONENTS

No.	Parts No.	Parts name	Remarks	Level	Cons	Qty
48	40028634	ASSY_UTT_RELEASE_LEVER_B				1
49	40142166	ASSY_UTT_DRIVE_CAM				1
50	40004240	ASSY UTT THREAD PULLING ARM				1
51	40015702	UTT_RATCH_PLATE_B				1
52	40004232	ASSY_UTT_SUPPORT_ARM				1
53	WP0431005SP	PLAIN WASHER 4.3X12X1				1
54	40015674	UTT_RATCH_STOPPER				1
55	SM6040602TP	SCREW M4 L=6				2
56	WP0550800SP	WASHER 5.5X10X0.8				2
57	NM6050001SP	NUT M5				1
58	SM6040602TP	SCREW M4 L=6				1
59	SM6040600SP	SCREW M4 L=6				1
60	SM6050802TP	SCREW M5X0.8 L=8				1
61	40028636	UTT_GUIDE_SHAFT_B				1
62	40004249	UTT SUSPENSION PLATE				1
63	40004243	UTT THREAD PULLING LEVER				1
64	40004246	UTT THREAD PULLING SHAFT				1
65	40004250	UTT TRIMMER CLOSE SPRING				1
66	40004297	UTT Y-DRIVE ROLLER				1
67	40004298	UTT Y-DRIVE SHAFT				1
68	SM6051202TP	SCREW M5X0.8 L=12				3
69	MAZ16013000	BUTTON SUPPORT LEVER SPRING				1
70	40004255	ASSY UTT TRIMMER			☆	1
71	40004294	UTT RELEASE ARM A				1

jintex.in

jintex.in

BOBBIN THREAD TRIMMER COMPONENTS

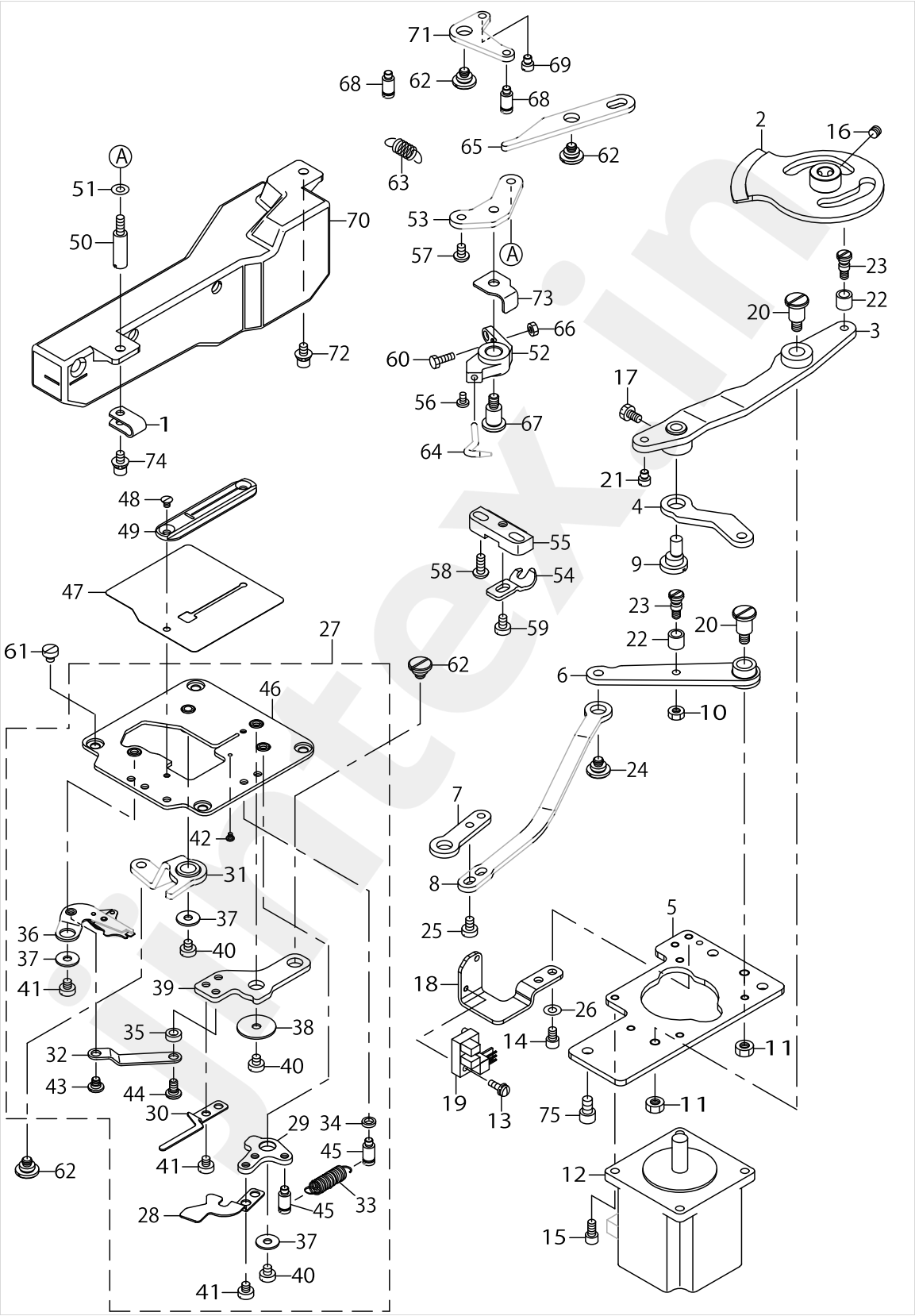

BOBBIN THREAD TRIMMER COMPONENTS

No.	Parts No.	Parts name	Remarks	Level	Cons	Qty
1	HX00150000A	CABLE CLAMP				1
2	40142170	ASSY_BTT_DRIVE_CAM				1
3	40004336	ASSY_BTT_DRIVE_LEVER				1
4	40004329	BTT_DRIVE_LINK				1
5	40141778	BTT_DRIVE_UNIT_BASE				1
6	40101649	BTT_RELEASE_LEVER				1
7	40004343	BTT_RELEASE_LINK_F				1
8	40004344	BTT_RELEASE_LINK_R				1
9	13737408	LINK ROD				1
10	NM6040001SD	NUT M4				1
11	NM6050001SP	NUT M5				2
12	40140041	DT TRIM MOTOR ASSY				1
13	SL4031091SC	SCREW M3 L=10				1
14	SM6040602TP	SCREW M4 L=6				2
15	SM6040802TP	SCREW M4X0.7 L=8				4
16	SM8050412TP	SCREW M5 L=4				2
17	SM9040700SP	HEXAGONAL BOLT				1
18	40141779	SENSOR_PLATE_BTT				1
19	HD00057000A	PHOTO SENSOR				1
20	SD0801006TP	SHOULDER SCREW D=8 H=10				2
21	40004299	STOPPER_PIN				1
22	40004254	UTT_CAM_ROLLER				2
23	40101638	UTT_CAM_ROLLER_SHAFT				2
24	SD0800296TP	SHOULDER SCREW D=8 H=2.9				1
25	SM6040600SP	SCREW M4 L=6				2
26	WP0430801SC	WASHER 4.3X9X0.8				2
27	40021998	THROAT_PLATE_BASE_UNIT				1
28	40022323	BT_CLAMP_B		*	☆	1
29	40004309	BT_CLAMP_LEVER		*		1
30	40022322	BT_PULLER_B		*	☆	1
31	40004321	ASSY_BT_RELEASE_ARM		*		1
32	40004308	BT_TRIMMER_LINK		*		1
33	40029613	CLAMP_SPRING		*		1
34	B1623180000	WASHER		*		1
35	B3013141H0A	WASHER		*		1
36	40004311	BT_TRIMMER		*	☆	1
37	WP0431005SP	PLAIN WASHER 4.3X12X1		*		3
38	WP0451016SP	WASHER 4.5X20X1		*		1
39	40004306	BTT_LEVER		*		1
40	SM6040450TP	SCREW M4 L=4		*		3
41	SM6040450TP	SCREW M4 L=4		*		5
42	SD0250101SP	HINGE SCREW		*		1
43	SD0500166TP	SHOULDER SCREW D=5 H=1.6		*		1
44	SD0500167TP	SHOULDER SCREW D=5 H=1.6		*		1
45	40004327	SUSPENSION_SCREW		*		2
46	40004301	ASSY_THROAT_PLATE_BASE		*		1
47	40004324	OIL_SHIELD				1

jintex.in

BOBBIN THREAD TRIMMER COMPONENTS

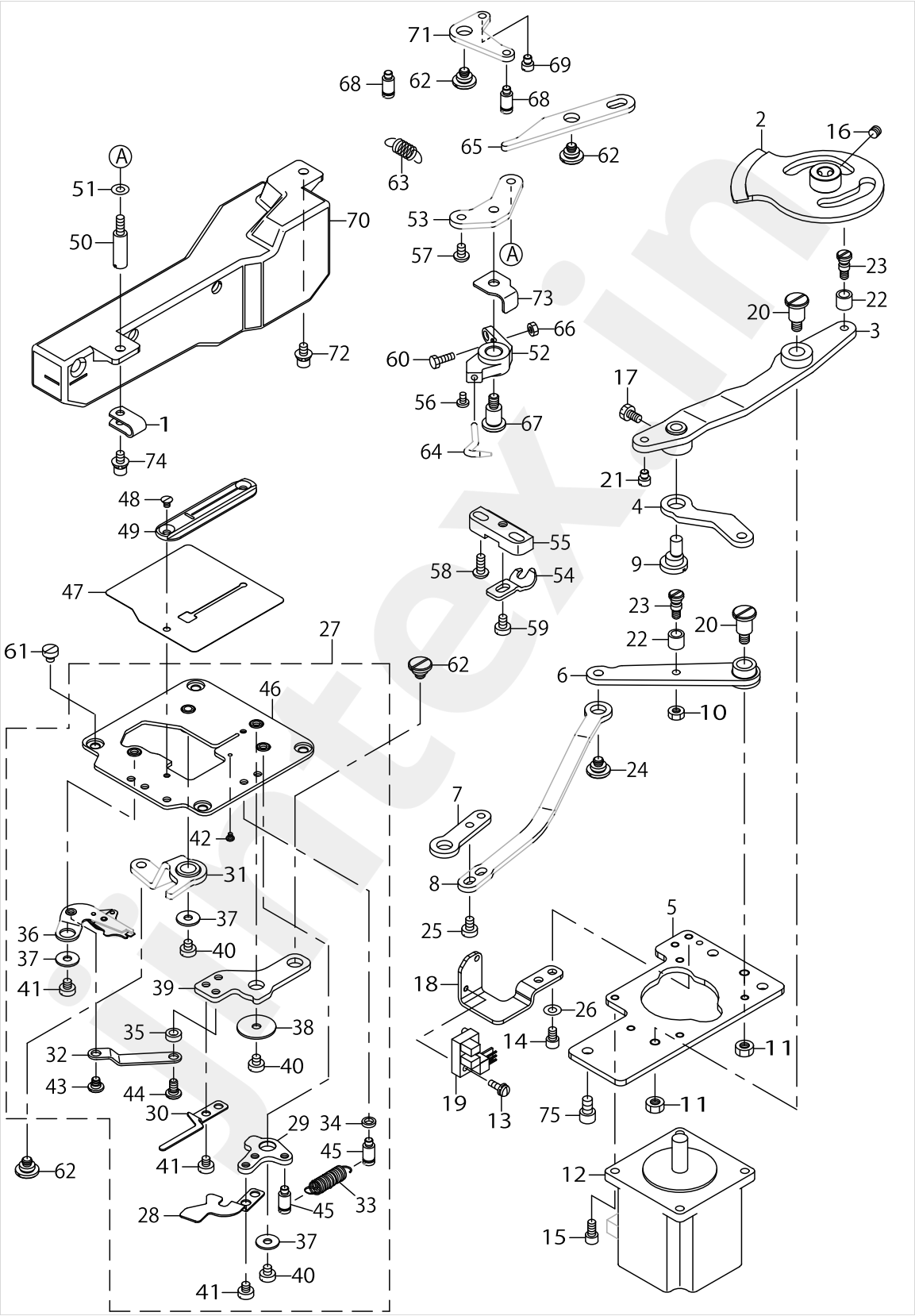

BOBBIN THREAD TRIMMER COMPONENTS

No.	Parts No.	Parts name	Remarks	Level	Cons	Qty
48	SM1030400SP	SCREW M3 L=4				2
49	40027553	THROAT_PLATE(1790S5)			☆	1
50	40011205	STUD				1
51	WP0430800SC	WASHER M4				1
52	40004345	PICKER_BASE				1
53	40004347	PICKER_BASE_FITTNG_PLATE				1
54	13727102	STOPPER A			☆	1
55	13729306	BOBBIN CASE POSITIONING PLATE				1
56	SM7030550TP	SCREW M3 L=4.5				1
57	SM6040602TP	SCREW M4 L=6				1
58	SM4041050TP	SCREW M4 L=10				2
59	SM6040600SP	SCREW M4 L=6				1
60	SM6041200SP	SCREW M4 L=12				1
61	SM6040450TP	SCREW M4 L=4				4
62	SD0800296TP	SHOULDER SCREW D=8 H=2.9				4
63	40011327	PICKER_SPRING				1
64	40004346	PICKER			☆	1
65	40004348	PICKER_ACTUATING_LEVER				1
66	NM6040001SD	NUT M4				1
67	SD0801006TP	SHOULDER SCREW D=8 H=10				1
68	40004327	SUSPENSION_SCREW				2
69	40004299	STOPPER_PIN				1
70	40141802	OIL_TANK				1
71	40004349	PICKER_ACTUATING_L_LINK				1
72	SL6040892TN	SCREW				4
73	40004328	PICKER_BASE_STOPPER				1
74	SL6041292TN	SCREW				1
75	SM6050802TP	SCREW M5X0.8 L=8				3

jintex.in

jintex.in

CLOTH CUTTING KNIFE COMPONENTS

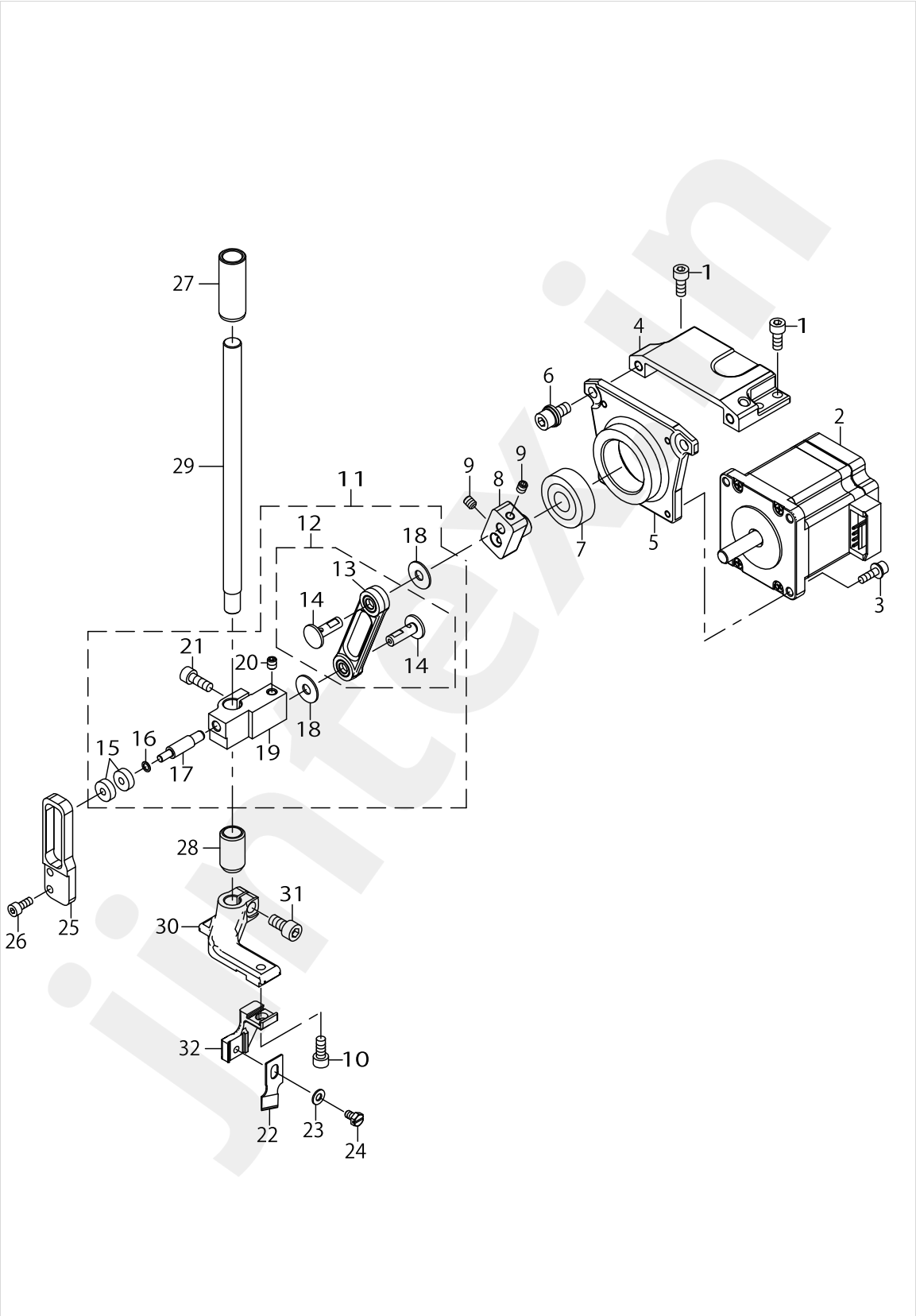

CLOTH CUTTING KNIFE COMPONENTS

No.	Parts No.	Parts name	Remarks	Level	Cons	Qty
1	SM6051202TP	SCREW M5X0.8 L=12				4
2	40139183	CLOTH CUT MOTOR ASSY				1
3	SL6041492TN	SCREW				4
4	40141781	MOTOR_BASE_A				1
5	40141780	MOTOR_BASE_B				1
6	SL6061492TN	BOLT				2
7	SB1120003C0	BEARING				1
8	40141782	KNIFE_DRIVING_BLOCK				1
9	SM8050612TP	SCREW M5X6				3
10	SM6051202TP	SCREW M5X0.8 L=12				1
11	40142163	KNIFE_DRIVING_ASSY				1
12	40142164	KNIFE_DRIVING_LINK_ASSY		*		1
13	40141783	KNIFE_DRIVING_LINK_COMBINATION		*		1
14	40008671	P=JUNCTION SHAFT SELECTIVE	SELECTIVE PARTS	*		2
15	SB1040008C0	BEARING		*		2
16	40010489	AT_PIVOT_SCREW_WASHER		*		1
17	40141786	SUPPORT_SHAFT		*		1
18	40042089	THRUST WASHER		*		2
19	40141785	KNIFE_BAR_BRACKET		*		1
20	SM8050612TP	SCREW M5X6		*		1
21	SM6051402TP	SCREW M5X0.8 L=14		*		1
22	B2702047L00A	KNIFE 1/2			☆	1
23	WP0430801SC	WASHER M4				1
24	SM9040700SP	HEXAGONAL BOLT			☆	1
25	40141787	SUPPORT_GUIDE				1
26	SM6041002TP	SCREW M4 L=10				2
27	40004398	KNIFE_BAR_BUSH				1
28	40040276	KNIFE_BAR_LOWER_BUSHING				1
29	40004394	KNIFE BAR				1
30	40004396	KNIFE BAR BASE				1
31	SM6061202TP	SCREW M6 L=12				1
32	40004393	KNIFE FITTING BASE				1

jintex.in

jintex.in

TABLE COMPONENTS

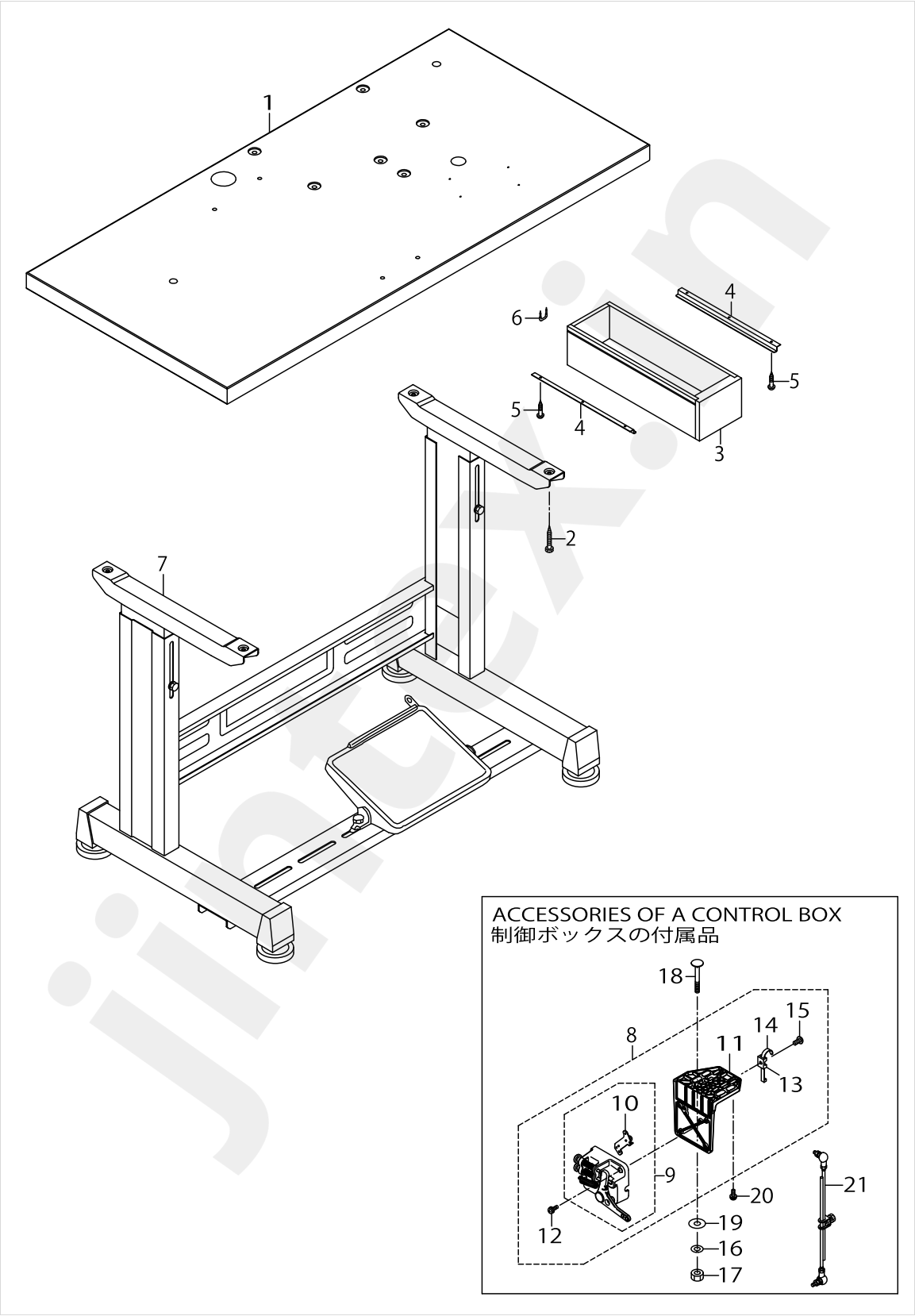

TABLE COMPONENTS

No.	Parts No.	Parts name	Remarks	Level	Cons	Qty
1	40142966	TABLE				1
2	ST9053511SR	TAPPING SCREW M5X35				4
3	11155108	DRAWER				1
4	11155207	DRAWER SUPPORT				2
5	SK3311600SC	WOOD SCREW D=3.1 L=16				6
6	D8204555D00	DRAWER STOPPER				1
7	11157567	T LEG JUNCTION				1
8	40094262	PEDAL SENSOR BASE ASSY				1
9	40094259	PEDAL SENSOR ASM.		*		1
10	40094260	SENSOR COIL HOLD ASSY		*		1
11	40099913	SENSOR_BRACKET		*		1
12	SL4041601SC	SCREW M4 L=16		*		3
13	KX000000210	SADDLE TYPE TIE MOUNT		*		1
14	KX000000230	RELEASIBLE CABLE TIE		*		1
15	SM4051001SC	SCREW M5 L=10		*		1
16	WS0820002KR	SPRING WASHER M8				2
17	NM6080002SC	NUT M8				2
18	MTSHJ100003	BOLT				2
19	WP0851846SC	WASHER 8.5X22.0X1.8				2
20	SL4051291SC	SCREW M5X0.8 L=12				2
21	40042134	CONNECING_ROD_ASSY				1

jintex.in

jintex.in

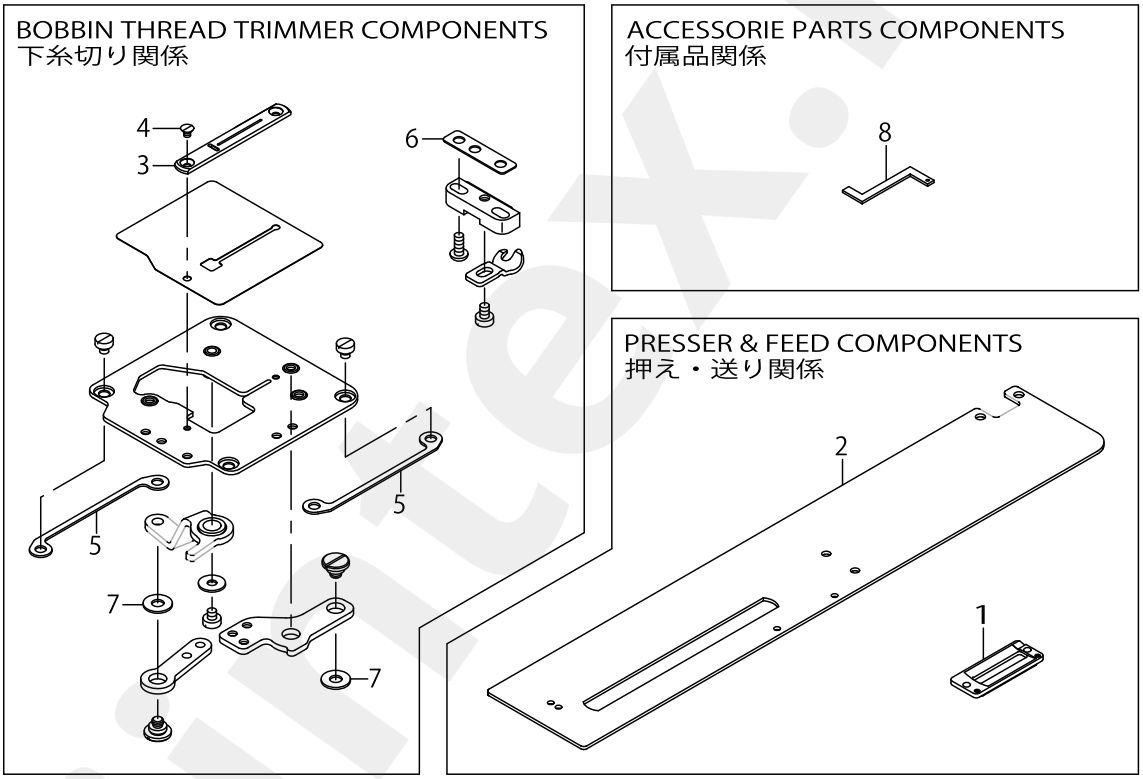
BOBBIN THREAD TRIMMER COMPONENTS
下糸切り関係
4
3
6
1
5
5
7
7
ACCESSORIE PARTS COMPONENTS
付属品関係
8
PRESSER & FEED COMPONENTS
押え・送り関係
2
1

jintex.in

EXCLUSIVE PARTS FOR LBH-1790ANB

No.	Parts No.	Parts name	Remarks	Level	Cons	Qty
1	40160113	WORK CLAMP				1
2	40160114	WORK CLAMP CARRIER				1
3	40153019	THROAT_PLATE_2B				1
4	40153923	SCREW_ADD				1
5	40011319	THROAT_PLATE_BASE_SPACER				2
6	40004326	BTT_SPACER				1
7	WP0551016SH	WASHER 5.5X13X1				2
8	40152575	TIMING_GAUGE_T				1

jintex.in

jintex.in

OPERATION BOX COMPONENTS (ACCESSORIES OF A CONTROL BOX)

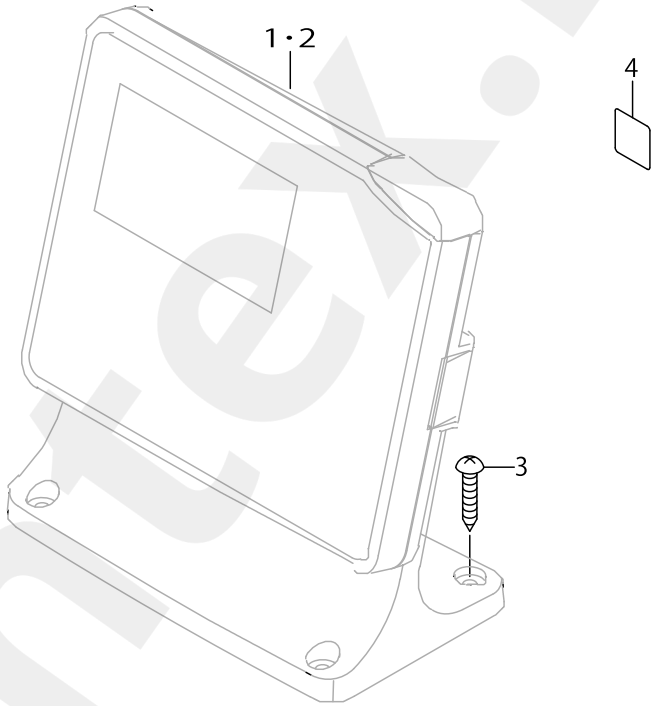

OPERATION BOX COMPONENTS (ACCESSORIES OF A CONTROL BOX)

No.	Parts No.	Parts name	Remarks	Level	Cons	Qty
1	40189780	LBH OPERATION BOX ASSY	FOR 1-PHASE 220～240V, 3-PHASE 200～240V, 1-PHASE 220～240V (FOR CHINA)			1
2	40191872	LBH OPERATION BOX ASSY CE	FOR 1-PHASE CE 220～240V			1
3	SK3382001SE	SCREW D=3.8 L=20				4
4	CM600100101	WEEE MARK LABEL S	FOR 1-PHASE CE 220～240V			1

jintex.in

jintex.in

CONTROL BOX COMPONENTS

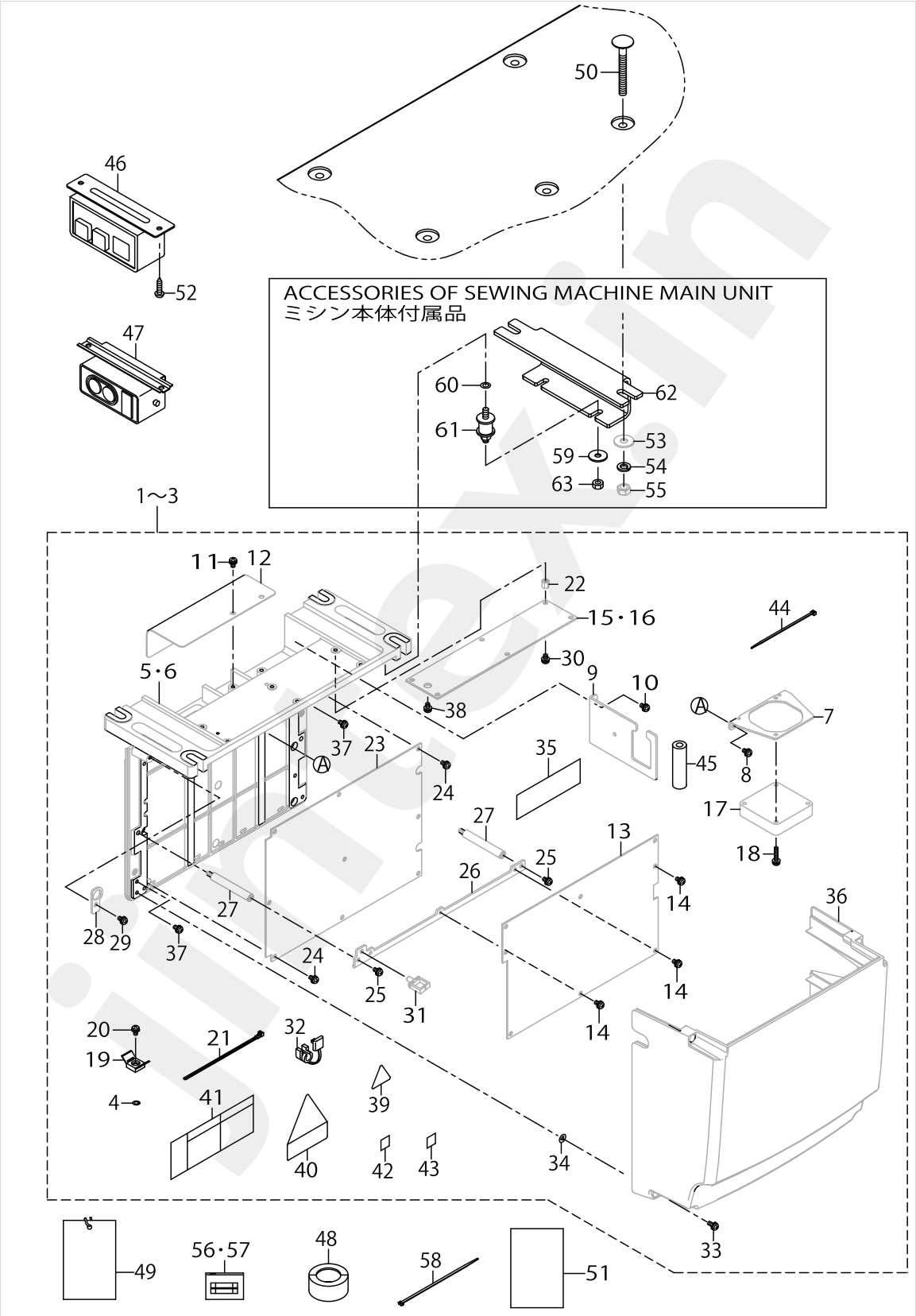

CONTROL BOX COMPONENTS

No.	Parts No.	Parts name	Remarks	Level	Cons	Qty
1	40189854	MC602N CTL BOX A ASM.	FOR 1-PHASE 220～240V			1
2	40189855	MC602N CTL BOX B ASM.	FOR 3-PHASE 200～240V			1
3	40189856	MC602N CTL BOX C ASM.	FOR1-PHASECE220～240V			1
4	WP0430800SC	WASHER M4	FOR 3-PHASE 200～240V, 1-PHASE CE 220～240V	*		1
5	40143989	FRAME_B	FOR 3-PHASE 200～240V, 1-PHASE CE 220～240V	*		1
6	40143988	FRAME_A	FOR 1-PHASE 220～240V	*		1
7	40115874	FAN PLATE		*		1
8	SL4040881SC	SCREW M4 L=8		*		2
9	40115876	PLATE B		*		1
10	SL4040881SC	SCREW M4 L=8		*		2
11	SL4040881SC	SCREW M4 L=8		*		2
12	40115879	FAN COVER		*		1
13	40193750	MAIN PCB ASSY		*		1
14	SL4040881SC	SCREW M4 L=8		*		8
15	40105465	FLT-T PCB ASSY	FOR 3-PHASE 200～240V	*		1
16	40105475	FLT-CE PCB ASSY	FOR1-PHASECE220～240V	*		1
17	40111214	FAN MOTOR ASSY		*		1
18	SL4042091SC	SCREW M4X0.7 L=20		*		2
19	KX000000260	SADDLE TYPE TIE MOUNT		*		1
20	SL4040881SC	SCREW M4 L=8		*		1
21	HX00292000A	CONNECTING PARTS		*		1
22	HX00339000M	SPACER	FOR 3-PHASE 200～240V, 1-PHASE CE 220～240V	*		6
23	40142267	SDC PCB ASSY		*		1
24	SL4041081SC	SCREW M4 L=10		*		4
25	SL4040881SC	SCREW M4 L=8		*		2
26	40115877	MAIN PLATE		*		1
27	40143990	STUD		*		2
28	40115878	PLATE C		*		1
29	SL4040881SC	SCREW M4 L=8		*		1
30	SL4040881SC	SCREW M4 L=8	FOR 3-PHASE 200～240V, 1-PHASE CE 220～240V	*		6
31	HX00222000D	WIRE SADDLE		*		1
32	KX000000320	BUSH		*		1
33	SL4041281SC	SCREW M4X0.7 L=12		*		4
34	M8002430000	STOPPER		*		4
35	40114398	MAIN COOL SHEET		*		2
36	40189853	COVER		*		1
37	SL4040881SC	SCREW M4 L=8		*		3
38	SL4030881SC	SCREW M3 L=8	FOR 3-PHASE 200～240V	*		1
39	CM300100001	LABEL	FOR 1-PHASE 220～240V, 1-PHASE CE 220～240V, 1-PHASE 220～240V (FOR CHINA)	*		1
40	CM300400602	VOLTAGE CAUTION LABEL L=25		*		1
41	CM300100402	VOLTAGE DANGER LABEL 3(SMALL)	FOR 3-PHASE 200～240V	*		1
42	CM600100101	WEEE MARK LABEL S	FOR1-PHASECE220～240V	*		1
43	40150131	EAC_MARK_LABEL_S	FOR1-PHASECE220～240V	*		1
44	EA9500B0100	CABLE BAND		*		1

jintex.in

CONTROL BOX COMPONENTS

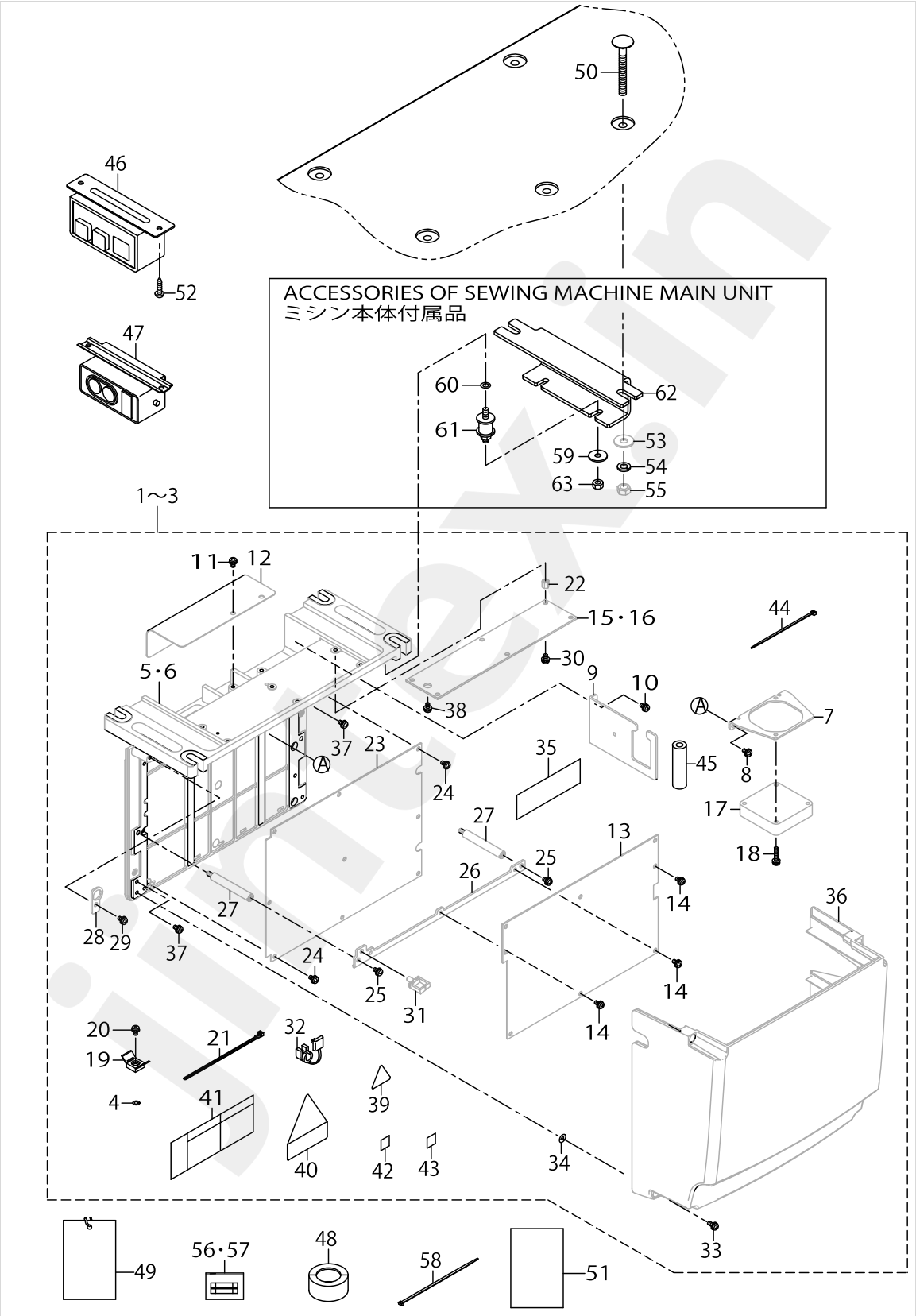

jintex.in

CONTROL BOX COMPONENTS

No.	Parts No.	Parts name	Remarks	Level	Cons	Qty
45	E8760452S00	TUBE	FOR 3-PHASE 200～240V, 1-PHASE CE 220～240V	*		0.055
46	40113427	POWER SWITCH	FOR 1-PHASE 220～240V			1
47	HA004250000	SWITCH	FOR 3-PHASE 200～240V			1
48	HN002460000	CORES	FOR1-PHASECE220～240V			6
49	M300451100A	VOLTAGE INDICATION CARD A				1
50	MTSHJ100003	BOLT				4
51	40144294	CORE SET UP MANUAL	FOR1-PHASECE220～240V			1
52	SK3512001SE	WOOD SCREW D=5.1 L=20	EXCEPT CE			2
53	WP0852086SC	WASHER M8				4
54	WS0820002KR	SPRING WASHER M8				4
55	NM6080002SC	NUT M8				4
56	HF0013050P0	FUSE 5A			☆	1
57	HF003000200	FUSE 2A (220/240V)			☆	1
58	EA9500B0200	CABLE BAND 150				2
59	WP0651646SC	WASHER				8
60	WT0640001KN	TOOTH WASHER				1
61	40165702	RUBBER_CUSHION				4
62	40142969	RUBBER CUSHION BRKT				2
63	NM6060001SC	NUT M6X1 TYPE1				4

jintex.in

jintex.in

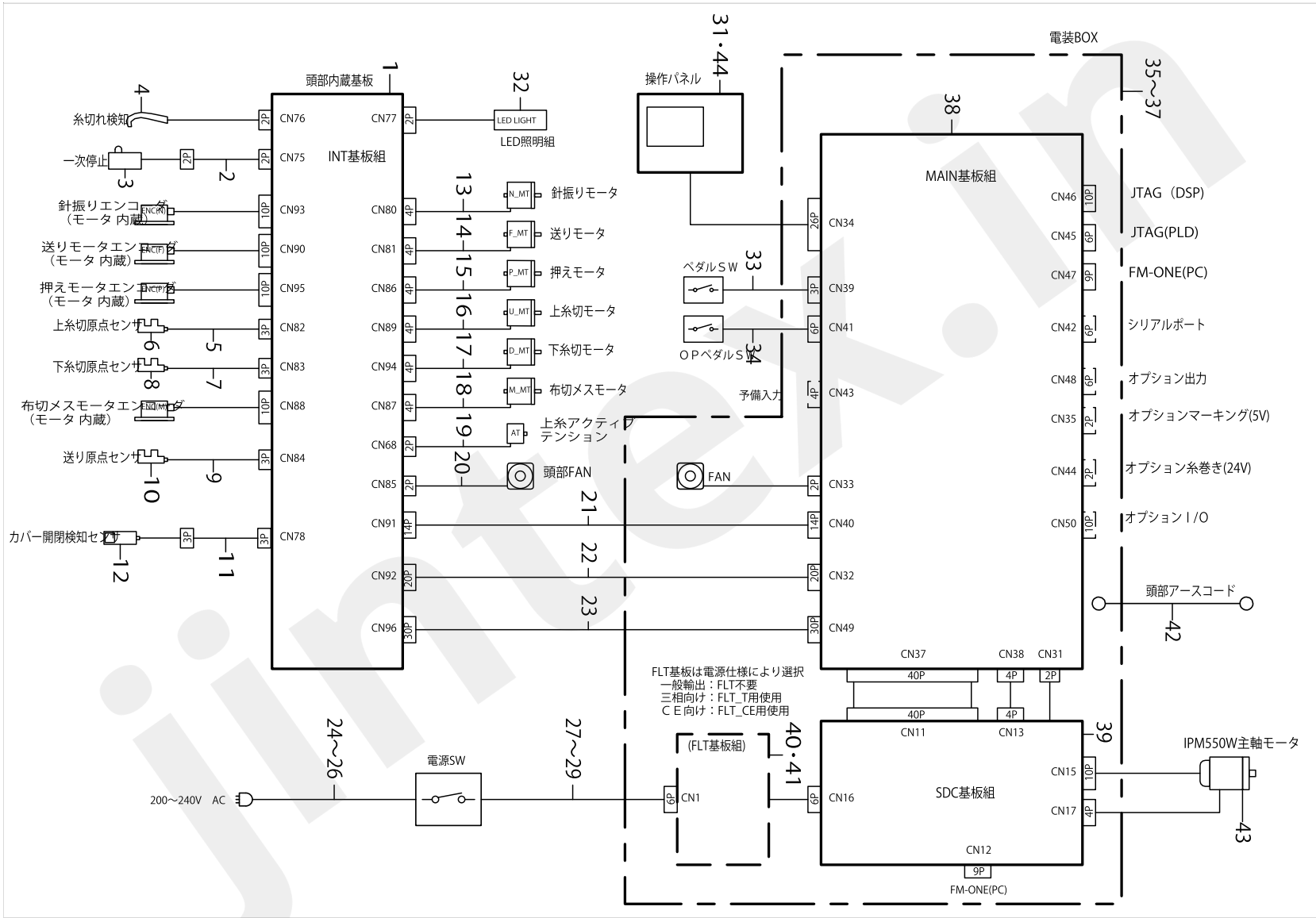
頭部内蔵基板
INT基板組
糸切れ検知
一次停止
針振りエンコーダ（モータ 内蔵）
送りモータエンコーダ（モータ 内蔵）
押えモータエンコーダ（モータ 内蔵）
上糸切原点センサ
下糸切原点センサ
布切メスモータエンコーダ（モータ 内蔵）
送り原点センサ
カバー開閉検知センサ
CN76
CN75
CN93
CN90
CN95
CN82
CN83
CN88
CN84
CN78
CN77
CN80
CN81
CN86
CN89
CN94
CN87
CN68
CN85
CN91
CN92
CN96
LED LIGHT
LED照明組
針振りモータ
送りモータ
押えモータ
上糸切モータ
下糸切モータ
布切メスモータ
上糸アクティブテンション
頭部FAN
操作パネル
ペダルＳＷ
ＯＰペダルＳＷ
予備入力
FAN
電装BOX
MAIN基板組
CN34
CN39
CN41
CN43
CN33
CN40
CN32
CN49
CN46
CN45
CN47
CN42
CN48
CN35
CN44
CN50
JTAG（DSP）
JTAG(PLD)
FM-ONE(PC)
シリアルポート
オプション出力
オプションマーキング(5V)
オプション糸巻き(24V)
オプション I /O
頭部アースコード
CN37
CN38
CN31
CN11
CN13
SDC基板組
CN15
CN17
CN16
CN12
FM-ONE(PC)
IPM550W主軸モータ
FLT基板は電源仕様により選択
一般輸出：FLT不要
三相向け：FLT_T用使用
ＣＥ向け：FLT_CE用使用
(FLT基板組)
CN1
電源SW
200～240V AC
1
2
3
4
5
6
7
8
9
10
11
12
13
14
15
16
17
18
19
20
21
22
23
24～26
27～29
31・44
32
33
34
35～37
38
39
40・41
42
43

jintex.in

WIRING DIAGRAM

No.	Parts No.	Parts name	Remarks	Level	Cons	Qty
1	40138611	INT PCB ASSY				1
2	40005400	PAUSE SWITCH JOINT CORD				1
3	32002354	SWITCH ASM.				1
4	40003499	THREAD BREAK DETECTOR A				1
5	40141480	UT TRIM SENSOR CORD ASSY				1
6	HD00057000A	PHOTO SENSOR				1
7	40141481	DT TRIM SENSOR CORD ASSY				1
8	HD00057000A	PHOTO SENSOR				1
9	40141482	FEED SENSOR CORD ASSY				1
10	HD00057000A	PHOTO SENSOR				1
11	40141484	COVER SENSOR RELAY CORD ASSY				1
12	40141483	COVER SENSOR ASSY				1
13	40139180	NEEDLE SWING MOTOR ASSY				1
14	40139181	FEED MOTOR ASSY				1
15	40139182	CLAMP MOTOR ASSY				1
16	40140040	UT TRIM MOTOR ASSY				1
17	40140041	DT TRIM MOTOR ASSY				1
18	40139183	CLOTH CUT MOTOR ASSY				1
19	40006261	ASSY_AT_SOLENOID				1
20	40111214	FAN MOTOR ASSY				1
21	40141479	INT CORD C ASSY				1
22	40141478	INT CORE B ASSY				1
23	40141477	INT CORD A ASSY				1
24	40023371	SINGLE PHASE POWER CORD ASSY	FOR 1-PHASE 220V～240V			1
25	M90175800A0	POWER CABLE ASM.	FOR 3-PHASE 200V～240V			1
26	40005390	JE POWER CABLE ASM.	FOR CE 220V～240V			1
27	40141487	AC POWER CORD A ASM.	FOR 1-PHASE 220V～240V			1
28	40141488	AC POWER CORD B ASM.	FOR 3-PHASE 200V～240V			1
29	40141489	AC POWER CORD C ASM.	FOR CE 220V～240V			1
30	40113427	POWER SWITCH				1
31	40189780	LHB OPERATION BOX ASSY	FOR 1-PHASE 220～240V, 3-PHASE 200～240V, 1-PHASE 220～240V (FOR CHINA)			1
32	40141706	ASSY_LED_DEVICE				1
33	40094262	PEDAL SENSOR BASE ASSY				1
34	40003491	ASSY_4_POSITION_PEDAL				1
35	40189854	MC602N CTL BOX A ASM.	FOR 1-PHASE 220V～240V			1
36	40189855	MC602N CTL BOX B ASM.	FOR 3-PHASE 200V～240V			1
37	40189856	MC602N CTL BOX C ASM.	FOR CE 220V～240V			1
38	40193750	MAIN PCB ASSY				1
39	40142267	SDC PCB ASSY				1
40	40105465	FLT-T PCB ASSY	FOR 3-PHASE 200V～240V			1
41	40105475	FLT-CE PCB ASSY	FOR CE 220V～240V			1
42	14115554	HEAD GROUND CABLE A ASM.				1
43	40138137	IPM550W MOTOR				1
44	40191872	LBH OPERATION BOX ASSY CE	FOR 1-PHASE CE 220～240V			1

jintex.in

ACCESSORIE PARTS COMPONENTS

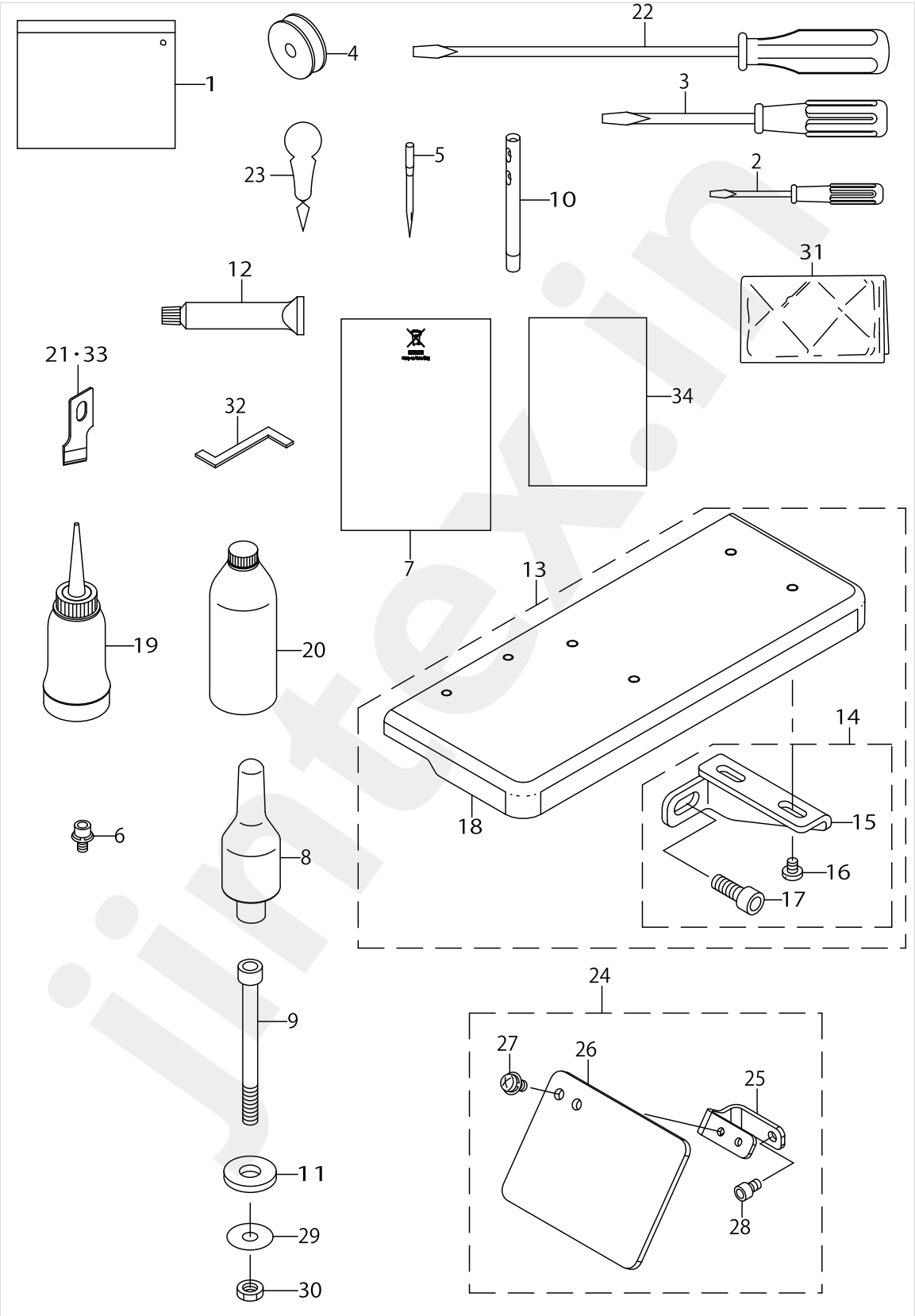

ACCESSORIE PARTS COMPONENTS

No.	Parts No.	Parts name	Remarks	Level	Cons	Qty
1	22932800	ACCESSORIE BAG				1
2	22933204	SCREW DRIVER SMALL				1
3	22933105	SCREW DRIVER MIDDLE				1
4	40009148	BOBBIN			☆	1
5	MDP5J0B1102	NEEDLE DPX5 #11J-2			☆	1
6	SL6040892TN	BOLT				1
7	CM600100201	WEEE INFORMATION SHEET				1
8	14101208	HEAD SUPPORT BAR				1
9	SM6067052TP	HEXAGON BOLT				4
10	22502504	THREAD GUIDE BAR				1
11	D6056555B00	RUBBER CUSHION (B)				4
12	40006323	JUKI GREASE A TUBE			☆	1
13	40189619	AUXILIARY_TABLE_ASM				1
14	40145523	INSTALLING_PLATE_SET		*		1
15	13785803	INSTALLING PLATE		*		2
16	SS7110570SP	SCREW 11/64-40 L=4.8		*		4
17	SM6061002TP	SCREW M6 L=10		*		2
18	40189620	AUXILIARY_TABLE_PAINTED		*		1
19	B91210120A0	OILER ASM.				1
20	MDFRX1200C0	NEW DEFRIX OIL NO.1(200ML)			☆	1
21	B2702047M00A	KNIFE 5/8			☆	1
22	22933006	SCREW DRIVER LARGE				1
23	B9107761000	THREAD PASSING INSTRUMENT			☆	1
24	40142172	ASSY_SAFETY_PLATE_B				1
25	40141799	SAFETY_PLATE_BASE		*		1
26	40141798	SAFETY_PLATE		*		1
27	SL4040891SC	SCREW M4 L=8		*		2
28	SM6040602TP	SCREW M4 L=6		*		1
29	WP0612056SD	WASHER 6.1X18.5X2				4
30	NM6060001SD	NUT M6				8
31	26234005	VINYL COVER				1
32	13943402	TIMING GAUGE				1
33	B2702047K00A	KNIFE 3/8			☆	1
34	29180403	EC PRODUCTION DECLARATION				1

jintex.in

jintex.in

THREAD STAND COMPONENTS

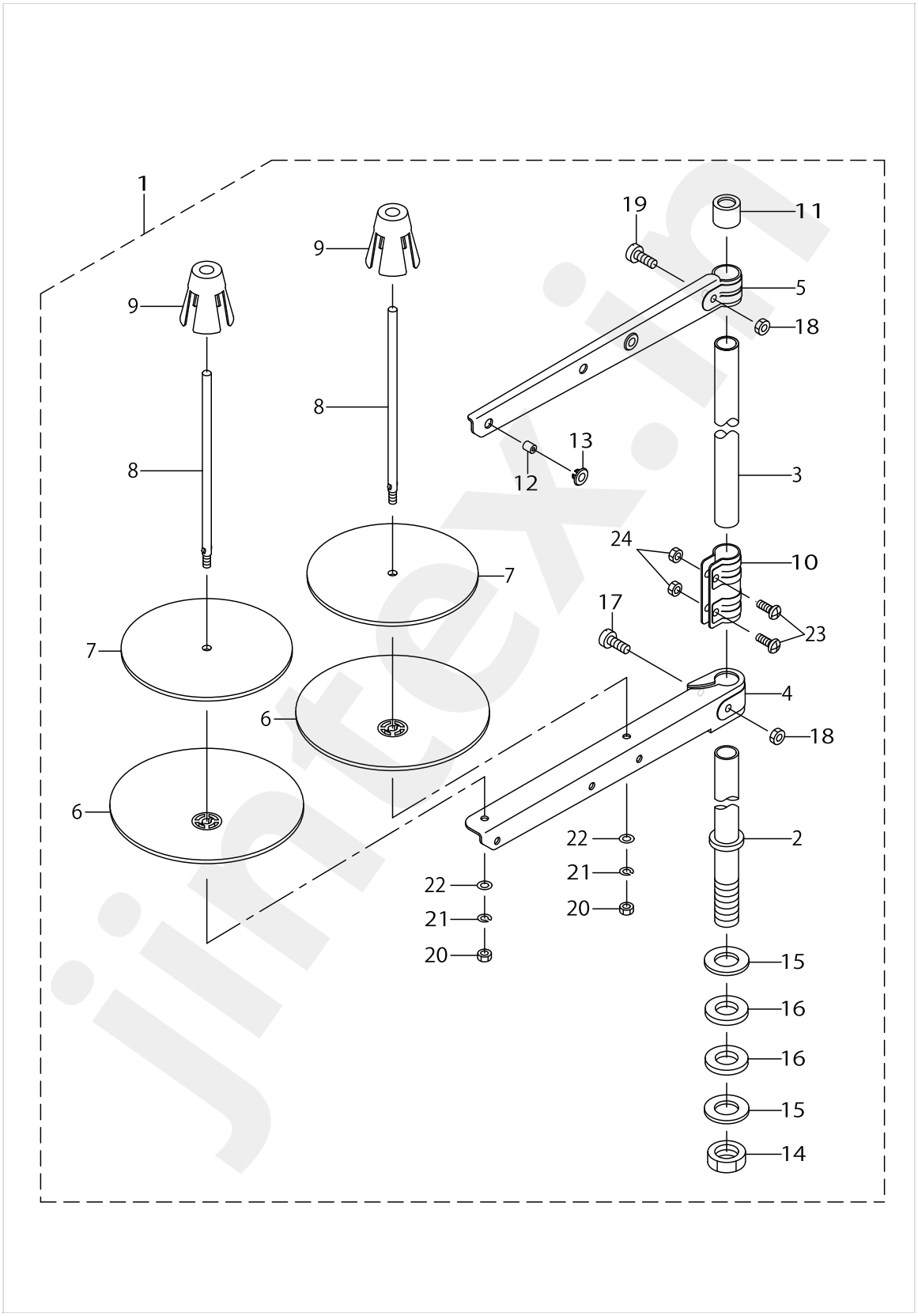

THREAD STAND COMPONENTS

No.	Parts No.	Parts name	Remarks	Level	Cons	Qty
1	40096354	THREAD STAND ASM.				1
2	40085784	SPOOL REST ROD LOWER		*		1
3	40085785	SPOOL REST ROD UPPER		*		1
4	40085786	SPOOL REST ARM LOWER		*		1
5	40085787	SPOOL REST ARM UPPER		*		1
6	40085788	SPOOL REST		*		2
7	40085789	SPOOL REST CUSHION		*	☆	2
8	40085790	SPOOL PIN		*		2
9	40085791	SPOOL RETAINER		*		2
10	40085792	SPOOL REST ROD JOINT		*		1
11	40085793	SPOOL REST ROD RUBBER CAP		*		1
12	40085794	THREAD GUIDE		*		2
13	40085795	THREAD GUIDE BUSHING		*		2
14	40096325	SPOOL REST ROD NUT		*		1
15	WP1612616SE	WASHER 16X30X2.6		*		2
16	40085796	SPOOL REST ROD RUBBER CUSHION		*		2
17	40096326	SPOOL REST ARM LOWER SCREW		*		1
18	NM6050001SE	NUT M5		*		2
19	40096327	SPOOL REST ARM UPPER SCREW		*		1
20	NM6050001SE	NUT M5		*		2
21	WS0510002KN	SPRING WASHER M5		*		2
22	WP0531001SC	WASHER M5		*		2
23	SM4051405SE	SCREW M5 L=14		*		2
24	NM6050001SE	NUT M5		*		2

jintex.in

jintex.in

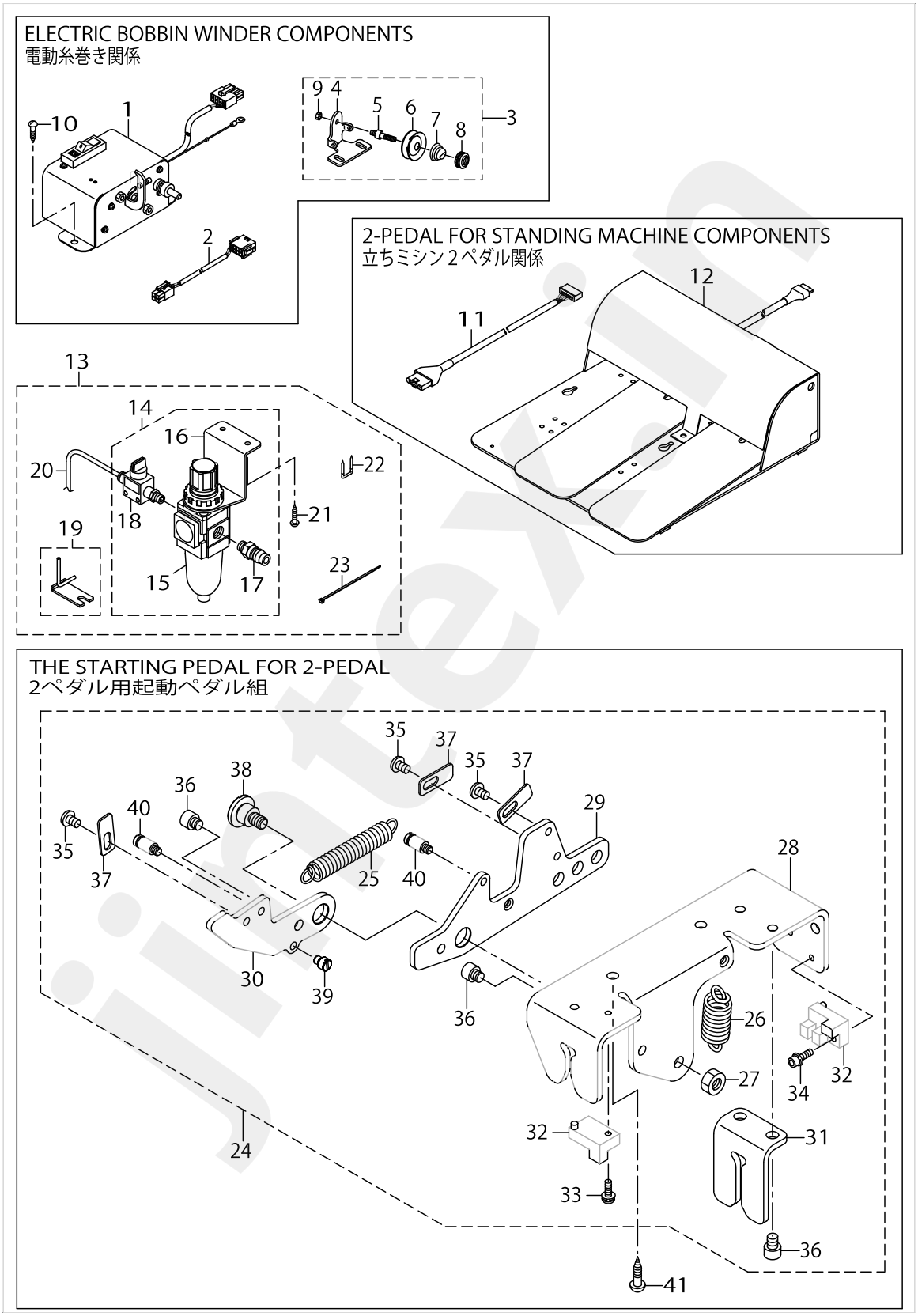

jintex.in

jintex.in

SPECIAL SPECIFICATIONS COMPONENTS (1)

No.	Parts No.	Parts name	Remarks	Level	Cons	Qty
1	G50011980A0A	BOBBIN WINDER ASM.				1
2	40005405	WINDER CORD ASSY				1
3	B32217710A0	BOBBIN WINDER TENSION BRACKET ASM.				1
4	B3221771000	BOBBIN WINDER TENSION BRACKET		*		1
5	B3219232000	BOBBIN WINDER TENSION POST		*		1
6	B3214047000	BOBBIN WINDER TENSION DISC		*		2
7	B3218232000	BOBBIN WINDER TENSION SPRING		*		1
8	B3216047000	BOBBIN WINDER TENSION NUT		*		1
9	NS6110310SP	NUT 11/64-40		*		1
10	SK3452000SC	WOOD SCREW D=4.5 L=20				4
11	40003493	PK PEDAL JOINT CORD ASSY				1
12	GPK510010B0	PEDAL SWITCH ASM.				1
13	40097040	HOOK COOLING UNIT B				1
14	40023432	FILTER REGULATOR ASM.		*		1
15	PF0551060A0	FILTER REGULATOR		*		1
16	PF902005000	REGULATOR BRACKET		*		1
17	PJ025100003	PLUG		*		1
18	PV015122000	FINGER VALVE		*		1
19	40094012	PIPE BRACKET ASM.		*		1
20	BT0400251EB	URETHANE HOSE BLACK		*		1.5
21	SK3412001SE	WOOD SCREW D=4.1 L=20		*		2
22	MAO11532000	CORD STAPLE		*		2
23	EA9500B0100	CABLE BAND		*		2
24	40003491	ASSY_4_POSITION_PEDAL				1
25	13731906	SPRING		*		1
26	B2583210D00	SPRING		*		1
27	NM6060001CP	NUT M6		*		1
28	40004360	PEDAL_FRAME		*		1
29	40004361	PEDAL_FRAME_A		*		1
30	40004362	PEDAL_FRAME_B		*		1
31	40004363	PEDAL_FRAME_GUIDE		*		1
32	HD00057000A	PHOTO SENSOR		*		2
33	SL4031091SC	SCREW M3 L=10		*		1
34	SL6031042TN	SCREW		*		1
35	SM5040655SN	SCREW		*		3
36	SM6050652TP	HEXAGON SOCKET HEAD SCREW M5X6		*		4
37	40004364	SENSOR_DETECTING_PLATE		*		3
38	SD1000646TP	SHOULDER SCREW D=10 H=6.4		*		1
39	40004299	STOPPER_PIN		*		1
40	40004327	SUSPENSION_SCREW		*		2
41	SK3482001SE	WOOD SCREW D=4.8 L=20				2

jintex.in

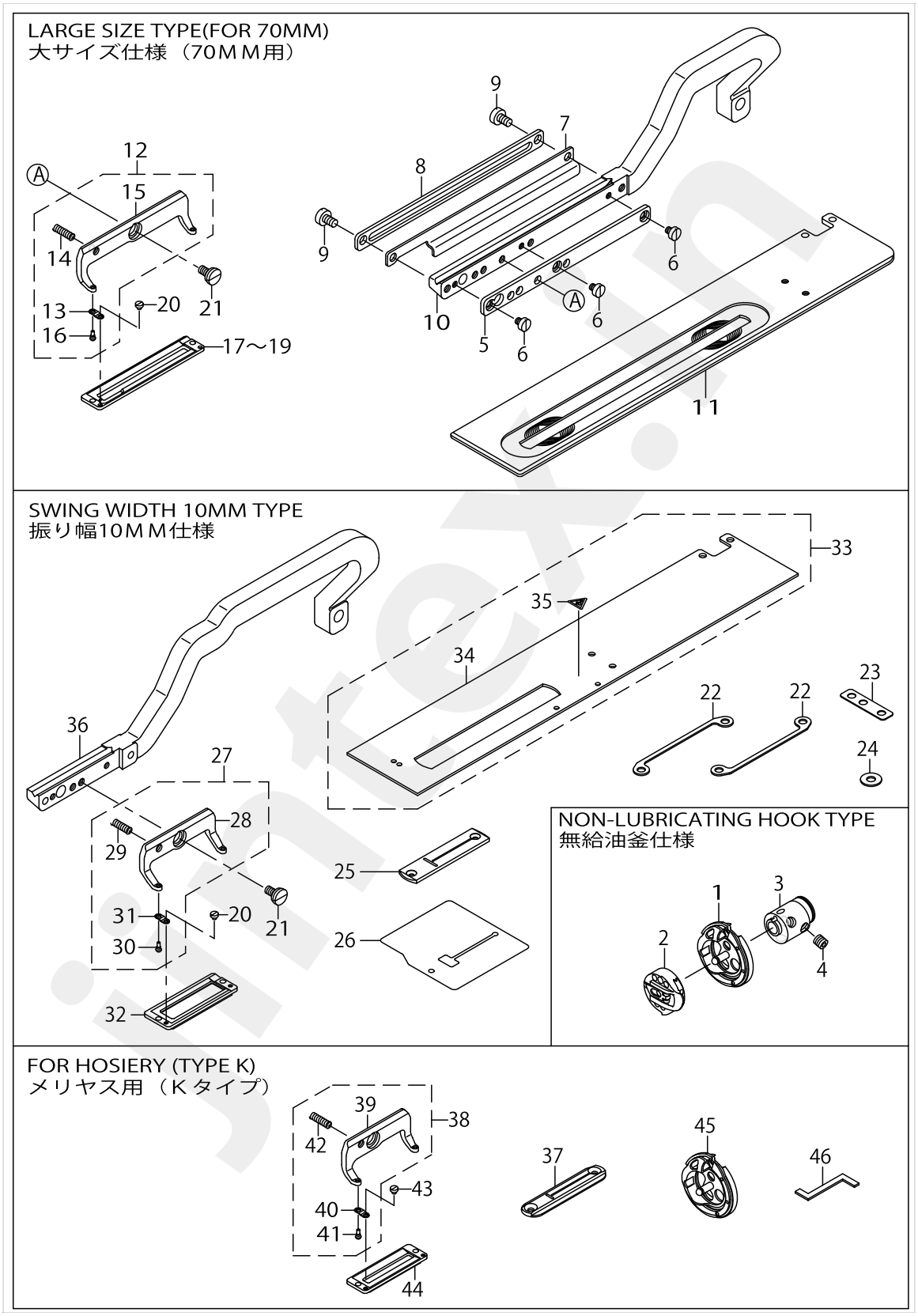
LARGE SIZE TYPE(FOR 70MM)
大サイズ仕様（70ＭＭ用）
SWING WIDTH 10MM TYPE
振り幅10ＭＭ仕様
NON-LUBRICATING HOOK TYPE
無給油釜仕様
FOR HOSIERY (TYPE K)
メリヤス用（Ｋタイプ）

jintex.in

SPECIAL SPECIFICATIONS COMPONENTS (2)

No.	Parts No.	Parts name	Remarks	Level	Cons	Qty
1	40006345	RP_HOOK_ASM.			☆	1
2	40006349	RP_BOBBIN_CASE			☆	1
3	13729603	HOOK SLEEVE				1
4	SS8660612TP	SCREW 1/4-40 L=6				4
5	40006340	WORK_CLAMP_HOLDER_SPACE	FOR PRESSER 70MM			1
6	SM6040450TP	SCREW M4 L=4	FOR PRESSER 70MM			3
7	40028682	UTT_CLOSE_CAM_120B				1
8	40112711	LIFTING_PLATE_120				1
9	SM6050800SP	SCREW M5 L=8				2
10	40006335	WORK_CLAMP_ARM_120				1
11	40006339	WORK_CLAMP_CARRIER_120				1
12	14523252	PRESSER FOOT 70 ASM.	FOR PRESSER 70MM			1
13	B1509761000	PRESSER FITTING PLATE SPRING		*		2
14	B1512761000	PRESSER FOOT HOLDER SPRING		*		1
15	14523203	PRESSER FOOT 70		*		1
16	B151077100B	PRESSER FOOT PIN B		*		2
17	14523708	URETHANE PRESSER 70	FOR PRESSER 70MM			1
18	14524102	PRESSER 70 (FLAT)	FOR PRESSER 70MM			1
19	14523401	PRESSER 70	FOR PRESSER 70MM			1
20	SS6060210SP	SCREW 3/32-56 L=1.9				6
21	SD0790203SP	HINGE SCREW D=7.94 H=2	FOR PRESSER 70MM			3
22	40011319	THROAT_PLATE_BASE_SPACER				2
23	40004326	BTT_SPACER				1
24	WP0551016SH	WASHER 5.5X13X1				2
25	40015733	THROAT_PLATE(S10)	FOR SWING WIDTH 10MM			1
26	40015802	OIL_SHIELD_10	FOR SWING WIDTH 10MM			1
27	40020010	WORK_CLAMP_HOLDER(3-10)_ASSY	FOR SWING WIDTH 10MM			1
28	40020011	WORK_CLAMP_HOLDER(3-10)		*		1
29	40008638	WORK_CLAMP_CHECK_HOLDER_SPRING_B		*		1
30	B151077100B	WORKCLAMPCHECKSPRINGSETPIN(B)		*		2
31	B1509761000	WORK CLAMP CHECK SPRING		*		2
32	40017810	WORK_CLAMP(3S-10)	FOR SWING WIDTH 10MM			1
33	40020014	WORK_CLAMP_CARRIER(10X41)_CL	FOR SWING WIDTH 10MM			1
34	40020012	WORK_CLAMP_CARRIER(10X41)		*		1
35	CM300200001	ATTENTION SEAL		*		1
36	40020013	WORK_CLAMP_ARM(10X41)	FOR SWING WIDTH 10MM			1
37	40027554	THROAT_PLATE(1790K5)				1
38	D1511772KA0	WORK CLAMP CHECK HOLDER ASM.				1
39	B1511772000A	WORK CLAMP CHECK HOLDER		*		1
40	B1509761000	WORK CLAMP CHECK SPRING		*		2
41	B151077100B	WORKCLAMPCHECKSPRINGSETPIN(B)		*		2
42	B1512761000	WORK CLAMP CHECK HOLDER SPRING		*		1
43	SS6060210SP	SCREW 3/32-56 L=1.9				2
44	D1508772K00	WORK CLAMP CHECK (2K)				1
45	13782065	HOOK COMPL. K				1
46	13782107	HOOK TIMING GAUGE K				1

jintex.in

		Cloth Cutting Knife 布切りメス		Presser Foot (Length of Cloth Cutting Knife) 押 え （布切りメス長さ）				Presser Foot (Presser Size) 押え足（押えサイズ）	
				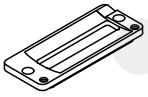				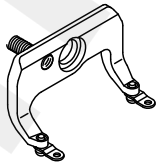	
		Standard 標 準		Standard 標 準		For Hosiery メリヤス用		Standard 標 準	
inch	mm	No	Part No	No	Part No	No	Part No	No	Part No
1/4	6.4	1	B2702-047-F00	12	B1552-781-000-A	15	D1508-771-K00-A	18	D1511-771-KA0-A
3/8	9.5	2	B2702-047-K00-A						
7/16	11.1	3	B2702-047-I00						
1/2	12.7	4	B2702-047-L00-A						
9/16	14.3	5	B2702-047-V00						
5/8	15.9	6	B2702-047-M00-A						
11/16	17.5	7	B2702-047-A00						
3/4	19.1	8	B2702-047-N00						
7/8	22.2	9	B2702-047-P00	13	B1552-782-000	16	D1508-772-K00	19	D1511-772-KA0
1	25.4	10	B2702-047-Q00-A						
1-1/4	31.8	11	B2702-047-S00-A	14	B1552-783-000	17	D1508-773-K00	20	D1511-773-KA0

		Cloth Cutting Knife 布切りメス		Knife Guard メス受板		Throat Plate 針 板	
				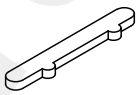		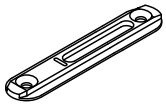	
		Flat Knife 平メス					
inch	mm	No	Part No	No	Part No	No	Part No
1/4	6.4	21	B2745-771-F00	31	B2746-771-000	32	137-82800
3/8	9.5	22	B2745-771-K00				
1/2	12.7	23	B2745-771-L00				
9/16	14.3	24	B2745-771-H00				
5/8	15.9	25	B2745-771-M00				
3/4	19.1	26	B2745-771-N00				
7/8	22.2	27	B2745-771-P00				
1	25.4	28	B2745-771-Q00				
1-1/8	28.6	29	B2745-771-R00				
1-1/4	31.8	30	B2745-771-S00				

jintex.in

EXCHANGING PARTS

No.	Parts No.	Parts name	Remarks	Level	Cons	Qty
1	B2702047F00	KNIFE 1/4				1
2	B2702047K00A	KNIFE 3/8				1
3	B2702047I00	KNIFE (7/16)				1
4	B2702047L00A	KNIFE 1/2				1
5	B2702047V00	KNIFE 9/16				1
6	B2702047M00A	KNIFE 5/8				1
7	B2702047A00	KNIFE 11/16				1
8	B2702047N00	KNIFE 3/4				1
9	B2702047P00	KNIFE 7/8				1
10	B2702047Q00A	KNIFE 1				1
11	B2702047S00A	KNIFE 1-1/4				1
12	B1552781000A	PRESSER				1
13	B1552782000	WORK CLAMP CHECK, 2				1
14	B1552783000	WORK CLAMP CHECK, 3				1
15	D1508771K00A	LATCH WORK CLAMP CHECK				1
16	D1508772K00	WORK CLAMP CHECK (2K)				1
17	D1508773K00	WORK CLAMP CHECK (3K)				1
18	D1511771KA0A	WARK CLAMP CHECK HOLDER ASM.				1
19	D1511772KA0	WORK CLAMP CHECK HOLDER				1
20	D1511773KA0	WORK CLAMP CHECK HOLDER				1
21	B2745771F00	KNIFE 1/4″(FLUOROCARBON)				1
22	B2745771K00	KNIFE 3/8″(FLUOROCARBON)				1
23	B2745771L00	KNIFE 1/2				1
24	B2745771H00	KNIFE 9/16″(FLUOROCARBON)				1
25	B2745771M00	KNIFE 5/8				1
26	B2745771N00	KNIFE 3/4				1
27	B2745771P00	KNIFE 7/8″(FLUOROCARBON)				1
28	B2745771Q00	KNIFE 1				1
29	B2745771R00	KNIFE 1-1/8″(FLUOROCARBON)				1
30	B2745771S00	KNIFE 1-1/4				1
31	B2746771000	KNIFE GUARD				1
32	13782800	THROAT PLATE(FLUOROCARBON)				1

jintex.in

1.As to "#01" and "#02" refer to the "Note" given at the bottom of the respective pages.

2.Codes on the "Qty" column

・Each numeral indicates the number of parts required.

・"0.1" and "2.5" indicate the length (in meters) of the respective parts.

3.Parentheses mean that the corresponding part is a subpart that constructs an assembly part.

4.Dotted lines on the Figures indicate assembly parts.

5.As to the parts with marks of "☆"(Consumable parts)and "◎"(optional parts)on the respectie parts, it is recommended to prepare spares.

１．リストページの＃０１、＃０２の印は、ページ下の”注記”の説明を参照下さい。

２．数量欄の数字は、個数を表し、０．１、２．５等の数値は、長さ（単位メートル）を表します。

３．数量欄の（　）は、組部品を構成している子部品であることを意味します。

４．イラストページのーーーーー枠は、組構成であることを意味します。

５．リストページの”☆”（消耗部品）、”◎”（オプション部品）の印が付いた部品は、予備を準備しておくことをお奨めします。

jintex.in

jintex.in

NUMERICAL INDEX OF PARTS

PART NO	PAGE	REF NO.
10006104	6	18
11072402	8	62
11093606	8	63
11155108	34	3
11155207	34	4
11157567	34	7
11272507	24	24
13127402	16	43
13700406	4	51
13700505	4	52
13700604	4	50
13700703	4	62
13703806	2	24
13703905	2	25
13705405	4	69
13706403	22	14
13710306	14	11
13710405	14	20
13710504	14	12
13727102	30	54
13729066	14	13
13729306	30	55
13729603	14	31
13729603	52	3
13729652	14	30
13729769	14	29
13731906	50	25
13737408	28	9
13782065	52	45
13782107	52	46
13782800	54	32
13785803	46	15
13922208	2	47
13943303	4	56
13943402	46	32
14101208	46	8
14115554	6	7
14115554	44	42
14504401	14	17
14523203	52	15
14523252	52	12
14523401	52	17～19
14523708	52	17～19
14524102	52	17～19
22502504	2	42
22502504	46	10
22528764	2	41
22529473	8	60
22529481	8	59
22891204	16	3
22918304	10	43
22932800	46	1
22933006	46	22
22933105	46	3
22933204	46	2
23530405	22	4
23536204	14	6
23630007	14	26
26230409	2	13
26230409	8	58
26234005	46	31
26260208	6	29
26260307	6	30
26260406	6	31
26260505	6	32
26260604	6	33
26260802	6	35
26261206	6	39
26261305	6	40
26261503	6	41
26261602	6	42
26261701	6	43
29180403	46	34
32002354	44	3
32055402	6	21
40003491	44	34
40003491	50	24
40003493	50	11
40003499	6	26
40003499	44	4
40004171	10	19
40004180	14	18
40004185	10	14
40004186	14	8
40004187	14	9
40004188	14	5
40004194	16	5
40004197	16	7
40004198	16	8
40004200	16	9
40004201	16	10
40004205	16	18
40004206	10	39
40004209	22	27
40004212	22	30
40004213	22	31
40004214	22	34
40004215	22	33
40004216	22	25
40004217	22	26
40004218	22	13
40004222	22	29
40004224	22	21
40004232	26	52
40004234	24	37
40004235	24	26
40004236	24	43
40004238	24	27
40004240	26	50
40004243	26	63
40004244	24	41
40004245	24	42
40004246	26	64
40004247	24	40
40004248	24	38
40004249	26	62
40004250	26	65
40004252	6	22
40004252	24	39
40004254	24	29
40004254	28	22
40004255	26	70
40004264	24	33
40004265	24	34
40004267	16	37
40004275	18	79
40004279	18	51
40004280	18	50
40004285	18	48
40004287	18	58
40004288	18	59
40004289	16	36
40004291	18	78
40004293	24	4
40004294	26	71

jintex.in

NUMERICAL INDEX OF PARTS

PART NO	PAGE	REF NO.
40004296	24	36
40004297	24	66
40004297	26	66
40004298	24	67
40004298	26	67
40004299	28	69
40004299	30	69
40004299	50	39
40004301	28	46
40004306	28	39
40004308	28	32
40004309	28	29
40004311	28	36
40004321	28	31
40004324	28	47
40004326	36	6
40004326	52	23
40004327	28	68
40004327	30	68
40004327	50	40
40004328	30	73
40004329	28	4
40004336	28	3
40004343	28	7
40004344	28	8
40004345	30	52
40004346	30	64
40004347	30	53
40004348	30	65
40004349	30	71
40004360	50	28
40004361	50	29
40004362	50	30
40004363	50	31
40004364	50	37
40004373	22	23
40004374	22	24
40004378	22	2
40004379	22	3
40004393	32	32
40004394	32	29
40004396	32	30
40004398	32	27
40004400	24	17
40005390	44	24～26

PART NO	PAGE	REF NO.
40005400	44	2
40005405	50	2
40006261	6	1
40006261	44	19
40006263	6	2
40006264	6	3
40006265	6	23
40006307	10	10
40006314	4	49
40006317	14	21
40006320	14	25
40006323	46	12
40006335	20	13
40006335	52	10
40006339	20	7
40006339	52	11
40006340	52	5
40006345	52	1
40006349	52	2
40008423	10	35
40008638	20	6
40008638	52	29
40008646	20	2
40008647	20	5
40008658	20	15
40008671	22	5
40008671	32	14
40008977	4	57
40008978	4	58
40009037	4	64
40009148	46	4
40010434	16	15
40010435	16	16
40010489	32	16
40010510	6	19
40010511	6	6
40010512	6	20
40010514	6	5
40010522	6	8
40010534	10	24
40010535	10	26
40011144	6	34
40011145	6	36
40011146	6	37
40011205	30	50

PART NO	PAGE	REF NO.
40011319	36	5
40011319	52	22
40011327	30	63
40011355	14	16
40011517	10	1
40015674	26	54
40015702	26	51
40015733	52	25
40015802	52	26
40017810	52	32
40020010	52	27
40020011	52	28
40020012	52	34
40020013	52	36
40020014	52	33
40020310	18	67
40021933	6	38
40021998	28	27
40022121	16	11
40022322	28	30
40022323	28	28
40023371	44	24～26
40023432	50	14
40027553	30	49
40027554	52	37
40028634	26	48
40028636	26	61
40028682	20	10
40028682	52	7
40029613	28	33
40032269	10	29
40037008	8	52
40040276	32	28
40042089	32	18
40042134	34	21
40051473	10	15
40051474	10	16
40067165	20	1
40075297	16	4
40085784	48	2
40085785	48	3
40085786	48	4
40085787	48	5
40085788	48	6
40085789	48	7

jintex.in

NUMERICAL INDEX OF PARTS

PART NO	PAGE	REF NO.
40085790	48	8
40085791	48	9
40085792	48	10
40085793	48	11
40085794	48	12
40085795	48	13
40085796	48	16
40088990	22	1
40094012	50	19
40094259	34	9
40094260	34	10
40094262	34	8
40094262	44	33
40096325	48	14
40096326	48	17
40096327	48	19
40096354	48	1
40097040	50	13
40099913	34	11
40101638	24	30
40101638	28	23
40101641	24	28
40101642	24	31
40101649	28	6
40105465	40	15·16
40105465	44	40·41
40105475	40	15·16
40105475	44	40·41
40108754	16	6
40111214	4	73
40111214	40	17
40111214	44	20
40112711	20	11
40112711	52	8
40113427	42	46
40113427	44	30
40114398	40	35
40115874	40	7
40115876	40	9
40115877	40	26
40115878	40	28
40115879	40	12
40138137	10	22
40138137	44	43
40138611	4	70

PART NO	PAGE	REF NO.
40138611	44	1
40139180	22	8
40139180	44	13
40139181	16	1
40139181	44	14
40139182	16	34
40139182	44	15
40139183	32	2
40139183	44	18
40140040	24	46
40140040	44	16
40140041	28	12
40140041	44	17
40141477	8	65
40141477	44	23
40141478	6	17
40141478	44	22
40141479	8	51
40141479	44	21
40141480	44	5
40141481	44	7
40141482	44	9
40141483	4	79
40141483	44	12
40141484	44	11
40141487	44	27～29
40141488	44	27～29
40141489	44	27～29
40141706	2	45
40141706	44	32
40141710	2	26
40141711	2	27
40141713	4	66
40141716	10	20
40141717	10	27
40141718	10	33
40141719	10	28
40141720	10	9
40141721	10	6
40141725	10	41
40141726	10	42
40141727	10	45
40141730	10	46
40141739	14	14
40141740	14	19

PART NO	PAGE	REF NO.
40141741	16	13
40141742	16	27
40141743	18	60
40141744	16	12
40141745	18	53
40141746	18	57
40141747	18	52
40141748	18	68
40141753	18	54
40141754	16	46
40141755	16	45
40141756	18	55
40141757	16	44
40141758	22	6
40141759	22	7
40141760	22	9
40141774	24	35
40141778	28	5
40141779	28	18
40141780	32	5
40141781	32	4
40141782	32	8
40141783	32	13
40141785	32	19
40141786	32	17
40141787	32	25
40141788	16	30
40141794	18	49
40141795	2	33
40141798	46	26
40141799	46	25
40141801	16	31
40141802	30	70
40142152	10	2
40142161	16	29
40142163	32	11
40142164	32	12
40142166	26	49
40142170	28	2
40142172	46	24
40142267	40	23
40142267	44	39
40142752	14	24
40142753	14	22
40142754	14	23

jintex.in

NUMERICAL INDEX OF PARTS

PART NO	PAGE	REF NO.
40142755	16	33
40142878	10	47
40142880	10	44
40142966	34	1
40142969	42	62
40143150	10	5
40143988	40	5·6
40143989	40	5·6
40143990	40	27
40144294	42	51
40145327	4	78
40145328	2	20
40145523	46	14
40150011	10	25
40150131	40	43
40152575	36	8
40153019	36	3
40153923	36	4
40160113	36	1
40160114	36	2
40165701	10	37
40165702	42	61
40165703	10	38
40165704	10	36
40172374	4	85
40172375	4	86
40189600	6	28
40189612	2	1
40189613	2	5
40189614	2	15
40189615	2	11
40189616	2	7
40189617	2	9
40189618	2	44
40189619	46	13
40189620	46	18
40189628	6	27
40189631	2	39
40189633	2	3
40189634	2	43
40189635	2	17
40189636	2	18
40189780	38	1·2
40189780	44	31·44
40189853	40	36

PART NO	PAGE	REF NO.
40189854	40	1～3
40189854	44	35～37
40189855	40	1～3
40189855	44	35～37
40189856	40	1～3
40189856	44	35～37
40191872	38	1·2
40191872	44	31·44
40193750	40	13
40193750	44	38
B1414232000	22	28
B1509761000	18	72
B1509761000	20	4
B1509761000	52	40
B151077100B	18	73
B151077100B	20	3
B151077100B	52	41
B1511771000B	18	71
B1511772000A	52	39
B1512761000	18	74
B1512761000	52	42
B1552781000A	18	76
B1552781000A	54	12
B1552782000	54	13
B1552783000	54	14
B1623180000	28	34
B1811771000	14	28
B2583210D00	50	26
B2702047A00	54	7
B2702047F00	54	1
B2702047I00	54	3
B2702047K00A	46	21·33
B2702047K00A	54	2
B2702047L00A	32	22
B2702047L00A	54	4
B2702047M00A	46	21·33
B2702047M00A	54	6
B2702047N00	54	8
B2702047P00	54	9
B2702047Q00A	54	10
B2702047S00A	54	11
B2702047V00	54	5
B2702210000	6	24
B2703210000	6	25
B2745771F00	54	21

PART NO	PAGE	REF NO.
B2745771H00	54	24
B2745771K00	54	22
B2745771L00	54	23
B2745771M00	54	25
B2745771N00	54	26
B2745771P00	54	27
B2745771Q00	54	28
B2745771R00	54	29
B2745771S00	54	30
B2746771000	54	31
B3013141H0A	28	35
B3214047000	8	64
B3214047000	50	6
B3216047000	50	8
B3218232000	50	7
B3219232000	50	5
B3221771000	50	4
B32217710A0	50	3
B9107761000	46	23
B91210120A0	46	19
BT0400251EB	50	20
CM300100001	40	39
CM300100402	40	41
CM300200001	4	72
CM300200001	52	35
CM300200003	4	68
CM300400602	40	40
CM301300001	4	71
CM600100101	38	4
CM600100101	40	42
CM600100201	46	7
CQ202000000	14	27
CQ252000000	10	18
CQ252000000	14	32
CS0800881TP	24	25
CS1000881TP	10	31
CS1501181TP	22	17
D1508771K00A	54	15
D1508772K00	52	44
D1508772K00	54	16
D1508773K00	54	17
D1511771KA0A	18	70
D1511771KA0A	54	18
D1511772KA0	52	38
D1511772KA0	54	19

jintex.in

NUMERICAL INDEX OF PARTS

PART NO	PAGE	REF NO.
D1511773KA0	54	20
D3162555B00	8	54
D6056555B00	4	61
D6056555B00	46	11
D8204555D00	34	6
E2002855000	4	60
E8760452S00	42	45
EA9500B0100	8	56
EA9500B0100	24	3
EA9500B0100	40	44
EA9500B0100	50	23
EA9500B0200	42	58
G50011980A0A	50	1
GPK510010B0	50	12
HA004250000	42	47
HD00057000A	16	2
HD00057000A	24	47
HD00057000A	28	19
HD00057000A	44	10
HD00057000A	50	32
HF0013050P0	42	56･57
HF003000200	42	56･57
HN002460000	42	48
HX001500000	4	81
HX00150000A	28	1
HX00151000A	8	57
HX00222000D	40	31
HX002550000	14	33
HX00292000A	40	21
HX00339000M	40	22
KX000000210	34	13
KX000000230	34	14
KX000000260	40	19
KX000000320	40	32
KX000000380	4	54
M300451100A	42	49
M8002430000	40	34
M90175800A0	44	24～26
MAO11532000	50	22
MAZ16013000	26	69
MDFRX1200C0	46	20
MDP5J0B1100	22	16
MDP5J0B1102	46	5
MTSHJ100003	34	18
MTSHJ100003	42	50

PART NO	PAGE	REF NO.
NM6030001SD	2	22
NM6040000SN	24	32
NM6040001SC	2	74
NM6040001SC	4	74
NM6040001SD	28	66
NM6040001SD	30	66
NM6050001SE	48	24
NM6050001SP	22	22
NM6050001SP	24	57
NM6050001SP	26	57
NM6050001SP	28	11
NM6060001CP	50	27
NM6060001SC	42	63
NM6060001SD	4	53
NM6060001SD	46	30
NM6080002SC	34	17
NM6080002SC	42	55
NM6100001SD	10	8
NS6110310SP	8	61
NS6110310SP	50	9
PF0551060A0	50	15
PF902005000	50	16
PJ025100003	50	17
PV015122000	50	18
RC0100001KP	10	4
RC0560711KP	6	44
RC1700001KP	6	4
RC2791218KP	14	7
RC3781518KP	10	3
RE0300000K0	24	2
RE0400000K0	6	45
RE0500000K0	16	42
SB1040008C0	32	15
SB110000600	14	2
SB110000700	10	7
SB1120003C0	32	7
SB112001600	14	1
SB115000200	14	3
SB115001500	14	4
SB1200008C0	10	34
SB307000200	18	56
SB408000100	16	47
SB710000600	16	14
SD0250101SP	28	42
SD0500166TP	28	43

PART NO	PAGE	REF NO.
SD0500167TP	28	44
SD0600266TP	24	8
SD0600326TP	24	21
SD0790203SP	18	77
SD0790203SP	20	9
SD0790203SP	52	21
SD0800296TP	28	62
SD0800296TP	30	62
SD0800326TP	16	35
SD0800406TP	24	22
SD0801006TP	28	67
SD0801006TP	30	67
SD0801506TP	24	23
SD1000646TP	50	38
SK3311600SC	34	5
SK3382001SE	38	3
SK3412001SE	50	21
SK3452000SC	50	10
SK3482001SE	50	41
SK3512001SE	42	52
SL4030881SC	4	80
SL4030881SC	40	38
SL4031091SC	16	19
SL4031091SC	24	7
SL4031091SC	28	13
SL4031091SC	50	33
SL4040881SC	40	37
SL4040891SC	46	27
SL4041081SC	40	24
SL4041281SC	40	33
SL4041601SC	34	12
SL4042091SC	40	18
SL4042591SC	4	75
SL4051291SC	34	20
SL6031042TN	50	34
SL6040892TN	2	63
SL6040892TN	4	63
SL6040892TN	30	72
SL6040892TN	46	6
SL6041292TN	30	74
SL6041492TN	32	3
SL6061492TN	32	6
SM0040801SC	2	19
SM0050801SC	8	53
SM0860400SN	6	9

jintex.in

NUMERICAL INDEX OF PARTS

PART NO	PAGE	REF NO.
SM1030400SP	30	48
SM4040655SP	2	28
SM4041050TP	30	58
SM4051001SC	34	15
SM4051055SP	2	16
SM4051405SE	48	23
SM4051655SP	2	12
SM5040550TP	16	28
SM5040655SN	6	47
SM5040655SN	50	35
SM6031402TP	2	23
SM6040450TP	28	61
SM6040450TP	30	61
SM6040450TP	52	6
SM6040502TP	16	41
SM6040502TP	22	35
SM6040600SP	24	59
SM6040600SP	26	59
SM6040600SP	28	59
SM6040600SP	30	59
SM6040602TP	2	82
SM6040602TP	4	82
SM6040602TP	8	50
SM6040602TP	16	20
SM6040602TP	24	58
SM6040602TP	26	58
SM6040602TP	28	57
SM6040602TP	30	57
SM6040602TP	46	28
SM6040650TP	4	77
SM6040750TP	22	32
SM6040802TP	16	61
SM6040802TP	18	61
SM6040802TP	20	14
SM6040802TP	24	12
SM6040802TP	28	15
SM6040860TP	6	10
SM6040860TP	24	11
SM6041002TP	16	22
SM6041002TP	32	26
SM6041200SP	24	13
SM6041200SP	30	60
SM6041202TP	10	40
SM6041202TP	16	38
SM6041202TP	22	10

PART NO	PAGE	REF NO.
SM6041602TP	18	62
SM6050652TP	2	29
SM6050652TP	24	14
SM6050652TP	50	36
SM6050800SP	18	63
SM6050800SP	20	12
SM6050800SP	24	15
SM6050800SP	52	9
SM6050802TP	2	48
SM6050802TP	4	48
SM6050802TP	6	11
SM6050802TP	24	60
SM6050802TP	26	60
SM6050802TP	30	75
SM6051002TP	18	65
SM6051202TP	26	68
SM6051202TP	32	10
SM6051402TP	32	21
SM6052002TR	10	23
SM6061002TP	2	36
SM6061002TP	16	23
SM6061002TP	46	17
SM6061202TP	22	20
SM6061202TP	32	31
SM6061802TP	16	24
SM6061802TP	22	12
SM6062502TP	10	11
SM6067052TP	2	37
SM6067052TP	46	9
SM7030550TP	22	15
SM7030550TP	30	56
SM8030412TP	6	13
SM8040802TP	8	49
SM8050412TP	16	17
SM8050412TP	24	19
SM8050412TP	28	16
SM8050502TP	8	48
SM8050502TP	14	10
SM8050502TP	16	40
SM8050502TP	22	18
SM8050502TP	24	20
SM8050602TP	18	66
SM8050612TP	32	20
SM80506A2TP	10	30
SM8060552TP	16	39

PART NO	PAGE	REF NO.
SM8060612TP	18	69
SM80606A2TP	2	38
SM80606A2TP	6	14
SM80606A2TP	10	32
SM80606A2TP	14	15
SM80606A2TP	16	26
SM80606A2TP	22	19
SM80608A2TP	10	48
SM80608A2TP	12	48
SM8081652TP	10	21
SM9040700SP	28	17
SM9040700SP	32	24
SM9040800SP	6	15
SM9061403CP	10	13
SS6060210SP	18	75
SS6060210SP	20	8
SS6060210SP	52	43
SS7110570SP	46	16
SS7110840SP	8	55
SS8660612TP	52	4
ST9053511SR	34	2
TA0500301R0	2	46
TA0550604R0	4	83
TA0750404R0	4	84
TA0850604R0	4	67
TA1050504R0	2	32
TA1250406R0	2	34
TA1550902R0	2	35
TA2100904R0	4	76
WP0430800SC	30	51
WP0430800SC	40	4
WP0430801SC	24	6
WP0430801SC	28	26
WP0430801SC	32	23
WP0431005SP	26	53
WP0431005SP	28	37
WP0450826SC	6	46
WP0451016SP	28	38
WP0531001SC	48	22
WP0550800SP	26	56
WP0551016SH	36	7
WP0551016SH	52	24
WP0612056SD	4	55
WP0612056SD	46	29
WP0621046SP	10	12

jintex.in

NUMERICAL INDEX OF PARTS

PART NO	PAGE	REF NO.
WP0651646SC	42	59
WP0851846SC	34	19
WP0852086SC	42	53
WP1612616SE	48	15
WS0410002KP	6	16
WS0510002KN	48	21
WS0820002KR	34	16
WS0820002KR	42	54
WT0640001KN	42	60

jintex.in

jintex.in