JINTEX

Sewing Machine Spare Parts

Juki LH-3128

Sewing Machine Part Book

73 pages

jintex.in | enquiry@jintex.in | +91 96321 55211

33 Park Road, Akkipet Circle, Bangalore

MODEL　: LH-3128-7/LH-3128
List No : 0942-09

PARTS LIST

Published:01/27/2020

jintex.in

CONTENTS

FRAME & MISCELLANEOUS COVER COMPONENTS 1
MAIN SHAFT, THREAD TAKE-UP & NEEDLE BAR COMPONENTS 5
TENSION POST COMPONENTS 9
HOOK & HOOK DRIVING SHAFT COMPONENTS 11
FEED MECHANISM COMPONENTS 15
PRESSER BAR & TENSION RELEASE COMPONENTS 19
THREAD TRIMMER MECHANISM COMPONENTS (FOR LH-3128-7) 23
AUTOMATIC REVERSE FEED MECHANISM COMPONENTS (FOR LH-3128-7) 27
WIPER MECHANISM COMPONENTS (FOR LH-3128-7) 29
LUBRICATION COMPONENTS 31
BELT COVER & BOBBIN WINDER COMPONENTS 35
OIL RESERVOI & KNEE LIFTER COMPONENTS 37
THREAD STAND COMPONENTS (1) (FOR USE IN JAPAN) 39
THREAD STAND COMPONENTS (2) (EXCEPT USE IN JAPAN) 41
LH-3128-7 EXCLUSIVE PARTS FOR BOBBIN THREAD CLAMPLESS TYPE 43
TABLE OF EXCHANGING GAUGE PARTS (1) 47
TABLE OF EXCHANGING GAUGE PARTS (2) 51
TABLE OF EXCHANGING GAUGE PARTS (3) 55
TABLE OF EXCHANGING GAUGE PARTS (4) 59
LIST FOR INFORMATION OF CHANGE 63

jintex.in

jintex.in

FRAME & MISCELLANEOUS COVER COMPONENTS

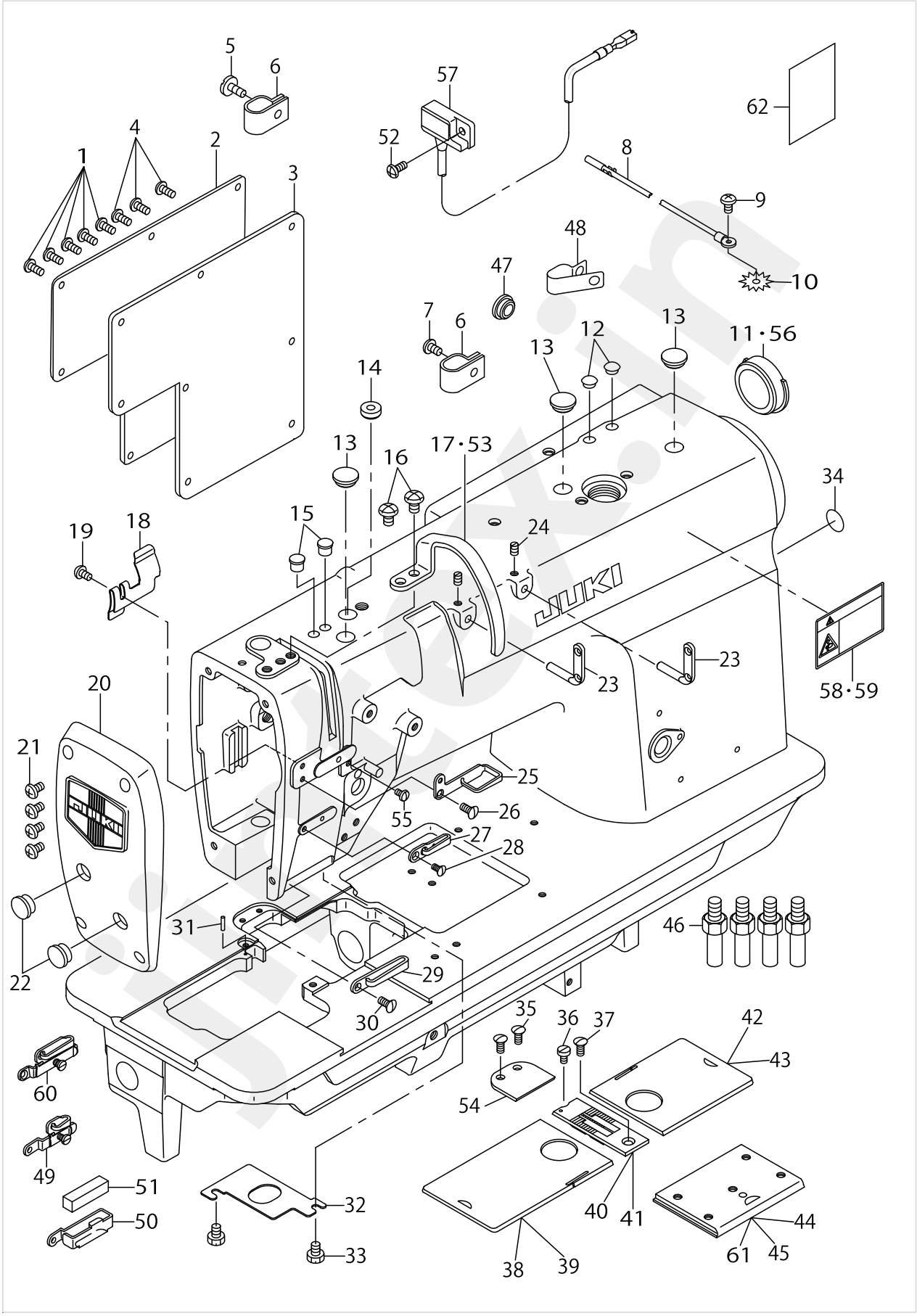

jintex.in

FRAME & MISCELLANEOUS COVER COMPONENTS

No.	Parts No.	Parts name	Remarks	Level	Cons	Qty
1	SS4110815SP	SCREW 11/64-40 L=8				5
2	10602902	SLIDE PLATE				1
3	10101004	GASKET				1
4	SS4110815SP	SCREW 11/64-40 L=8	FOR LH-3128			3
5	SS6111140SP	SCREW 11/64-40 L=11	FOR LH-3128-7			3
6	D2112555B00	CORD HOLDER, LARGE	FOR LH-3128-7			2
7	SS4120615SP	SCREW 3/16-28 L=6	FOR LH-3128-7			1
8	22951552	GROUND WIRE ASM.	FOR LH-3128-7			1
9	SS4120615SP	SCREW 3/16-28 L=6	FOR LH-3128-7			1
10	WT0530002KS	TOOTHED WASHER D=5.3	FOR LH-3128-7			1
11	22619100	CAP	FOR LH-3128			1
12	TA0750404R0	PLUG D=7.5 L=3.5	FOR LH-3128			2
13	TA1250406R0	RUBBER PLUG D=12.5 L=4				3
14	22620900	CAP				1
15	TA0750704R0	RUBBER PLUG				2
16	SS4150915SP	SCREW 15/64-28 L=9				2
17	22602007	THREAD TAKE-UP LEVER OIL GUARD	EXCEPT USE IN JAPAN & JE			1
18	23204803	LUBRICATING GUIDE				1
19	SS3090610SP	SCREW 9/64-40 L=6				1
20	22602254	FACE PLATE ASM.				1
21	SS4121015SP	SCREW 3/16-28 L=10				4
22	TA1250406R0	RUBBER PLUG D=12.5 L=4				2
23	22920706	TWO EYELET				2
24	SS8120740SP	SCREW 3/16-28 L=7				2
25	22603013	THREAD GUIDE (UPPER)				1
26	SS2090710TP	SCREW 9/64-40 L=7.2				1
27	22603112	THREAD GUIDE				1
28	SS2090710TP	SCREW 9/64-40 L=7.2				1
29	22603203	THREAD GUIDE(LOWER)	TYPE S,G			1
30	SS2090710TP	SCREW 9/64-40 L=7.2				1
31	B1104051000	THROAT PLATE PIN				1
32	22602304	PLATE				1
33	SS9110460CP	SCREW 11/64-40 L=4				2
34	22901805	GROUND MARK				1
35	SS2090710TP	SCREW 9/64-40 L=7.2				2
36	SS6090630SP	SCREW 9/64-40 L=6				1
37	SS2110920TP	SCREW 11/64-40 L=8.5				1
38	22601058	BED SLIDE LEFT, ASM., A	SELECTIVE PARTS FOR LH-3128			1
39	22650857	BED SLIDE LEFT, ASM., A	SELECTIVE PARTS FOR LH-3128-7			1
40	22625503	THROAT PLATE 1/4	EXCHANGING GAUGE PARTS FOR LH-3128(SEE P.27～33)			1
41	22660609	THROAT PLATE 1/4	EXCHANGING GAUGE PARTS FOR LH-3128-7(SEE P.27～33)			1
42	22600555	BED SLIDE RIGHT, ASM., A	SELECTIVE PARTS FOR LH-3128			1
43	22650352	BED SLIDE RIGHT, ASM., A	SELECTIVE PARTS FOR LH-3128-7			1
44	22650055	BED SLIDE ASM.	FOR LH-3128			1
45	22650055	BED SLIDE ASM.	FOR LH-3128-7			1
46	22602601	BED SCREW STUD				4

jintex.in

FRAME & MISCELLANEOUS COVER COMPONENTS

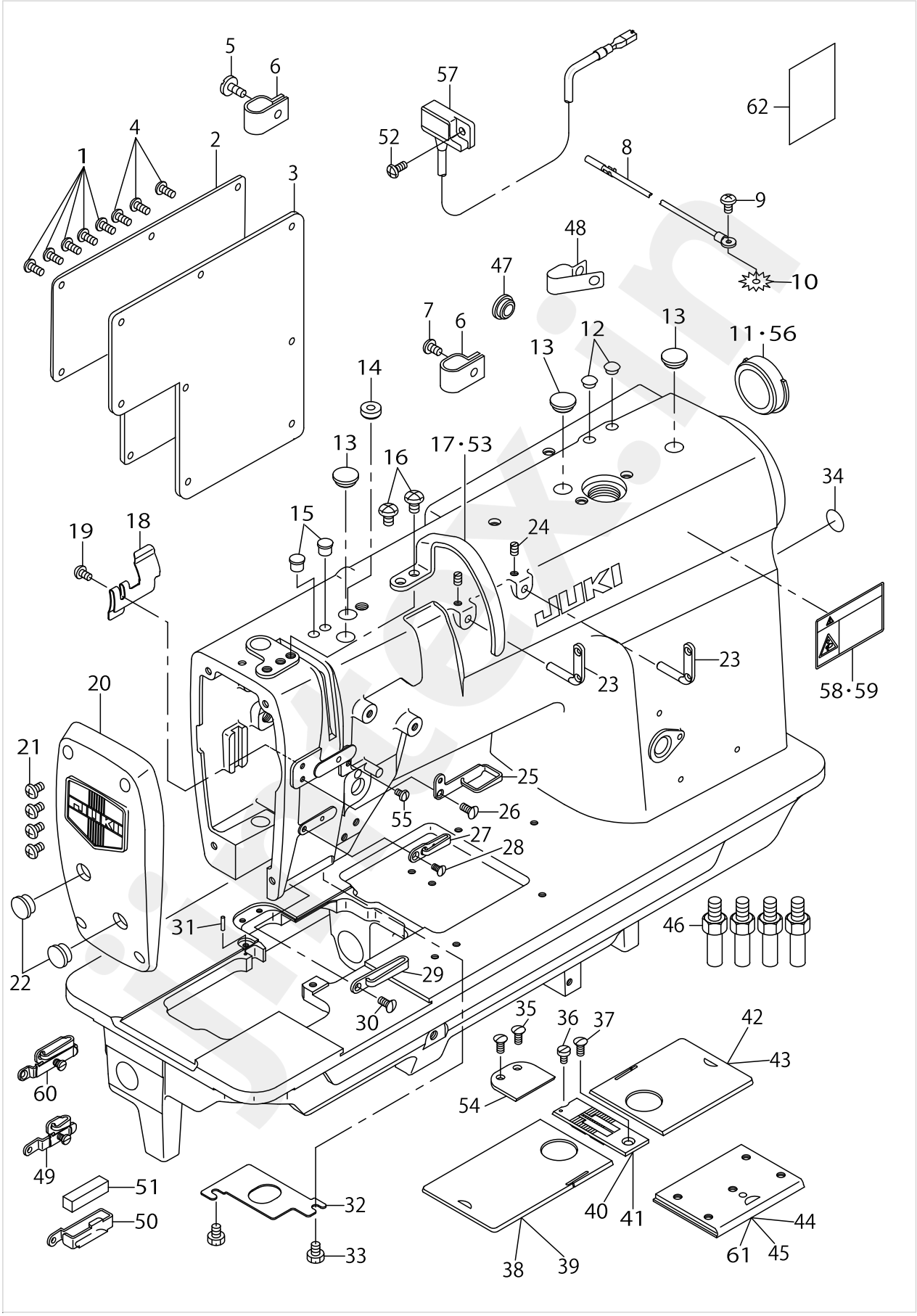

jintex.in

FRAME & MISCELLANEOUS COVER COMPONENTS

No.	Parts No.	Parts name	Remarks	Level	Cons	Qty
47	TA1250406R0	RUBBER PLUG D=12.5 L=4				1
48	D2112555B00	CORD HOLDER, LARGE	FOR LH-3128-7-WB, -WO, -OB			3
49	22651459	THREAD GUIDE ASM., E	OPTIONAL PARTS			1
50	22603609	THREAD GUIDE	TYPE A AND F FOR 7/16 OR LE-SS ONLY TYPE A FOR 7/16 OR LESS ONLY			1
51	22603708	FELT	TYPE A AND F FOR 7/16 OR LE-SS ONLY TYPE A FOR 7/16 OR LESS ONLY			1
52	SS4111015SP	SCREW 11/64-40 L=10	FOR LH-3128-7			1
53	22818009	BALANCE COVER(FOR JE)	FOR JE,USE IN JAPAN			1
54	22651202	AUXILIARY COVER				1
55	SS5090610SP	SCREW 9/64-40 L=6				1
56	22657803	RUBBER PLUG	FOR LH-3128-7			1
57	M6043350AAA	RESISTANCE PACK ASM.,AA	FOR LH-3128-7			1
58	CM3002001A1	SAFETY LABEL.,3 (SMALL).	EXCEPT USE IN JAPAN & JE			1
59	CM300200101	SAFETY LABEL, 1(SMALL).	FOR USE IN JAPAN			1
60	22811558	THREAD GUIDE F ASM.	TYPE A FOR 1/2 OR MORE ONLY			1
61	22608509	SLIDE PLATE FOR FOLDER	TYPE A FOR 1/2 OR MORE ONLY			1
62	40021415	INSTRUCTION MANUAL(SUPPLEMENT)	FOR CHINA			1

jintex.in

jintex.in

MAIN SHAFT, THREAD TAKE-UP & NEEDLE BAR COMPONENTS

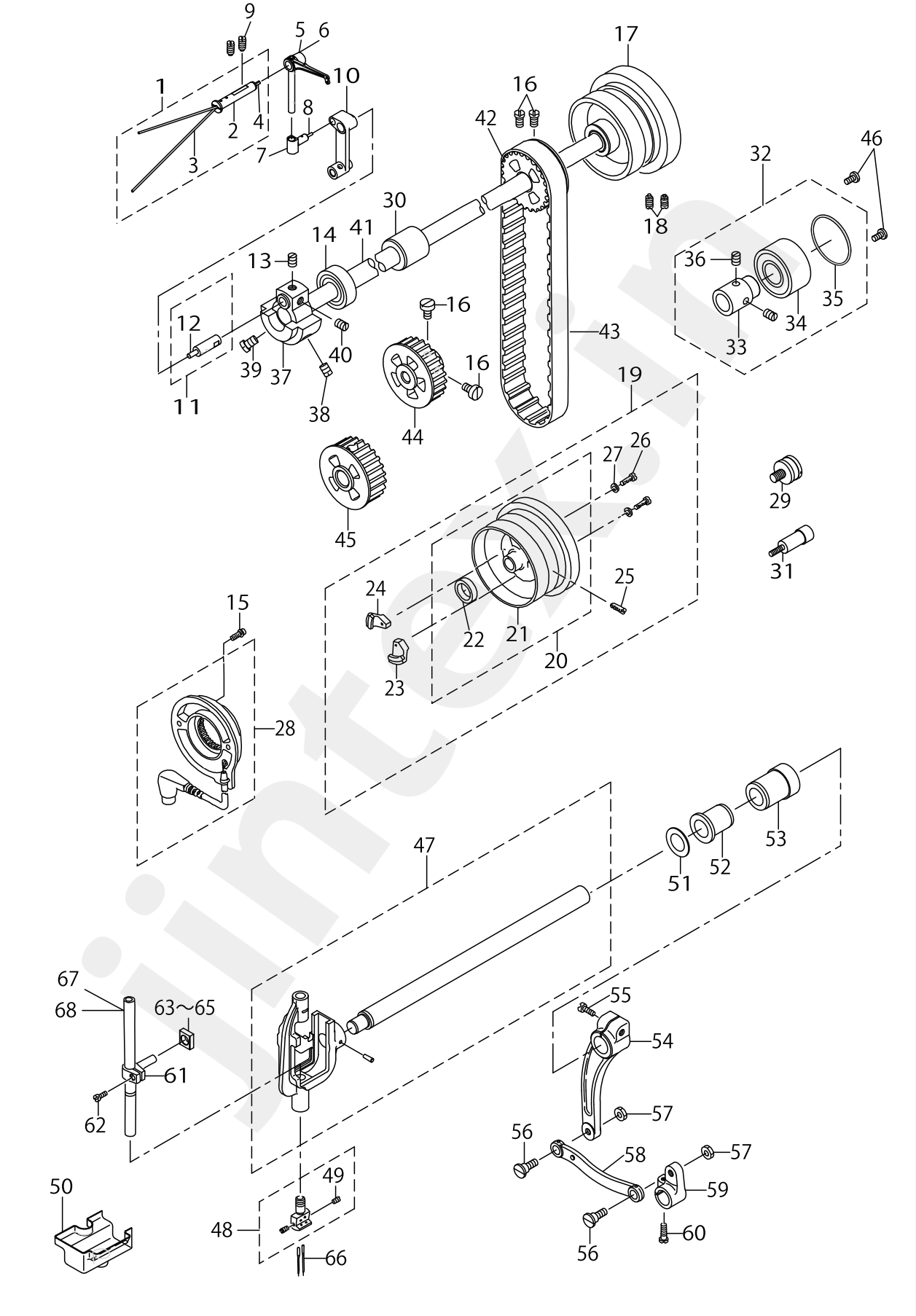

jintex.in

MAIN SHAFT, THREAD TAKE-UP & NEEDLE BAR COMPONENTS

No.	Parts No.	Parts name	Remarks	Level	Cons	Qty
1	22605356	THREAD TAKE-UP LEVER PIN ASM.				1
2	22605307	THREAD TAKE-UP LEVER PIN		*		1
3	CQ202000000	OIL WICK		*		0.4
4	CQ252000000	OIL WICK		*		0.04
5	23203706	THREAD TAKE-UP LEVER A	FOR LH-3128			1
6	23203805	THREAD TAKE-UP LEVER B	FOR LH-3128-7			1
7	22605406	TAKE-UP LEVER THRUST PIN				1
8	CQ252000000	OIL WICK				0.03
9	SS8151150TP	SCREW 15/64-28 L=10.5				2
10	23204308	NEEDLE BAR CRANK ROD				1
11	22680656	NEEDLE BAR CRANK PIN ASM.				1
12	CQ505000000	OIL WICK		*		0.1
13	SS8680540SP	SCREW 9/32-28 L= 4.5				1
14	B1202512000	MAIN SHAFT BUSHING, FRONT				1
15	10604809	SCREW				2
16	SS6661110SP	SCREW 1/4-40 L=11				4
17	22604508	HAND WHEEL	FOR LH-3128			1
18	SS8151550SP	SCREW 15/64-28 L=15	FOR LH-3128			2
19	22651566	HAND WHEEL ASM.	FOR LH-3128-7			1
20	22651558	HAND WHEEL		*		1
21	22651509	HAND WHEEL		*		1
22	M4002110000	GENERATOR ROTOR		*		1
23	M40071100AA	MAGNET FITTING BASE A ASM.		*		1
24	M40071100AB	MAGNET FITTING BASE B ASM.		*		1
25	SS8151550SP	SCREW 15/64-28 L=15		*		2
26	SS6111210SP	SCREW 11/64-40 L=12		*		2
27	WP0450801SD	WASHER 4.5X10X0.8		*		2
28	22937965	DYNAMO STATOR	FOR LH-3128-7			1
29	22622401	SYNCRO FRNGE	OPTIONAL PARTS			1
30	22603906	UPPER SHAFT INNER METAL				1
31	22622351	SENSOR SUPPORT SHAFT ASM.	OPTIONAL PARTS			1
32	22604656	THRUST COLLAR ASM.				1
33	22604607	THRUST COLLAR		*		1
34	SB120000100	BEARING D=20X47		*		1
35	RO437200200	RUBBER RING		*		1
36	SS8660530TP	SCREW 1/4-40 L= 4.5		*		2
37	22604409	COUNTERWEIGHT				1
38	SS8681650TP	SCREW 9/32-28 L=16				1
39	SS7681750TP	SCREW 9/32-28 L=16.5				1
40	SS8680810TP	SCREW 9/32-28 L=8.0				1
41	22604003	MAIN SHAFT				1
42	22604904	UPPER SPROCKET				1
43	22604300	TIMING BELT				1
44	22623201	SPROCKET WHEEL	FOR LH-3128			1
45	22651608	SPROCKET WHEEL	FOR LH-3128-7			1
46	SS7120760SP	SCREW 3/16-28 L= 7.0				2
47	23204258	NEEDLE BAR ROCKING BASE ASM.				1

jintex.in

MAIN SHAFT, THREAD TAKE-UP & NEEDLE BAR COMPONENTS

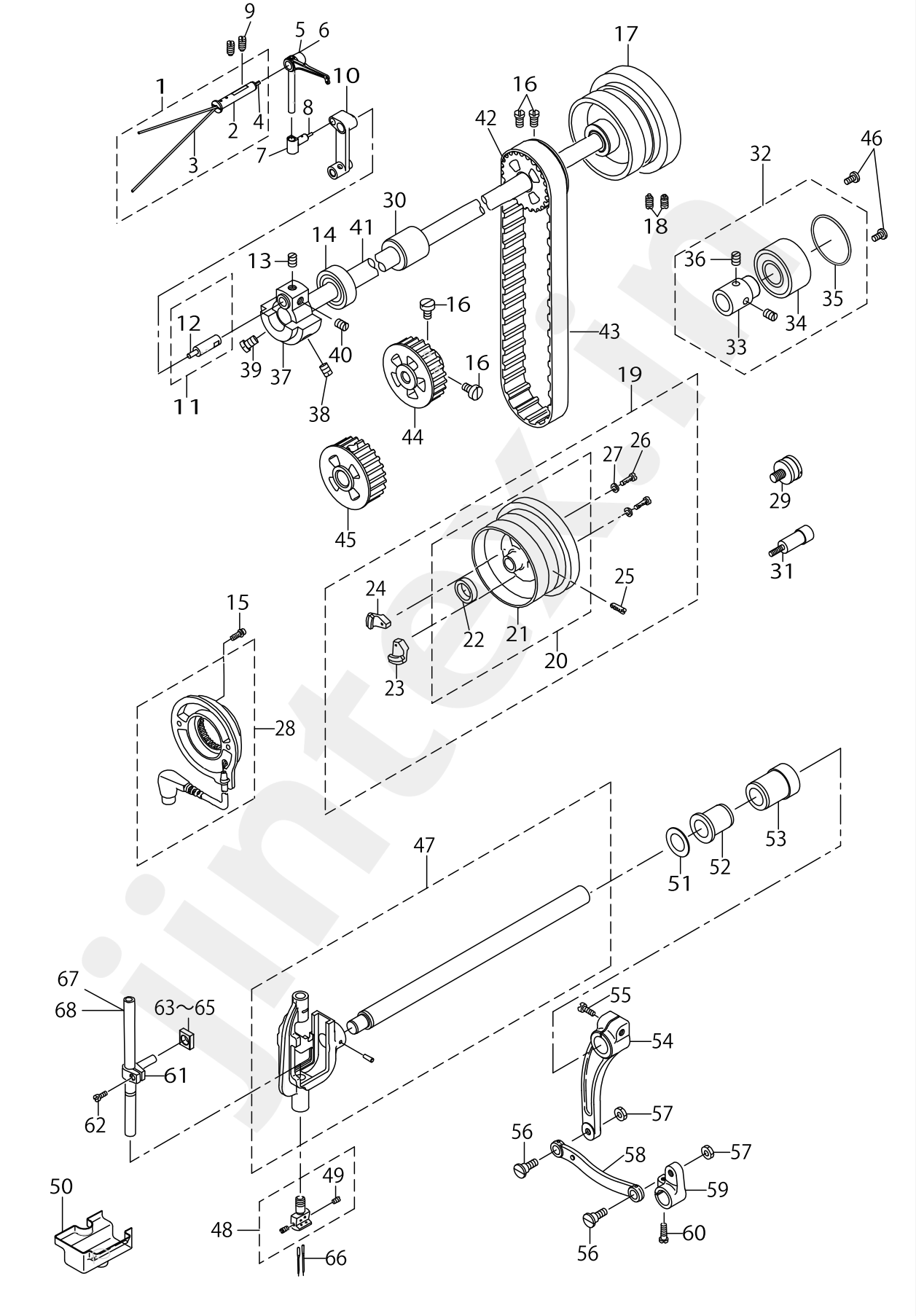

MAIN SHAFT, THREAD TAKE-UP & NEEDLE BAR COMPONENTS

No.	Parts No.	Parts name	Remarks	Level	Cons	Qty
48	10148054	NEEDLE CLAMP ASM. 1/4	ORDER FOR NEEDLE CLAMP ONLY CANNOT BE ACCEPTED			1
49	SS8080660TP	SCREW 1/8-44 L=5.5		*		2
50	22606800	OIL GUARD RUBBER				1
51	B1438512B00	WASHER 17.1X28X1.5	SELECTIVE PARTS			1
52	22607303	BUSHING				1
53	22607402	BUSHING				1
54	22607006	REAR ARM				1
55	SS6152440SP	SCREW 15/64-28 L=23.5				1
56	SD0870601SP	HINGE SCREW D= 8.73 H= 6.0				2
57	NS6150430SP	NUT 15/64-28				2
58	22607105	DRIVING ROD				1
59	22607204	DRIVING ARM				1
60	SS6121610TP	SCREW 3/16-28 L=15.5				1
61	10104800	NEEDLE BAR CONNECTION				1
62	SS7090910SP	SCREW 9/64-40 L= 8.5				1
63	23204506	ROCKING ROD SQUARE BLOCK A	SELECTIVE PARTS			1
64	23204605	ROCKING ROD SQUARE BLOCK B	SELECTIVE PARTS			1
65	23204704	ROCKING ROD SQUARE BLOCK C	SELECTIVE PARTS			1
66	MDP500B1400	NEEDLE DPX5 #14				2
67	22606008	NEEDLE BAR	FOR LH-3128			1
68	22651905	NEEDLE BAR	FOR LH-3128-7			1

jintex.in

jintex.in

TENSION POST COMPONENTS

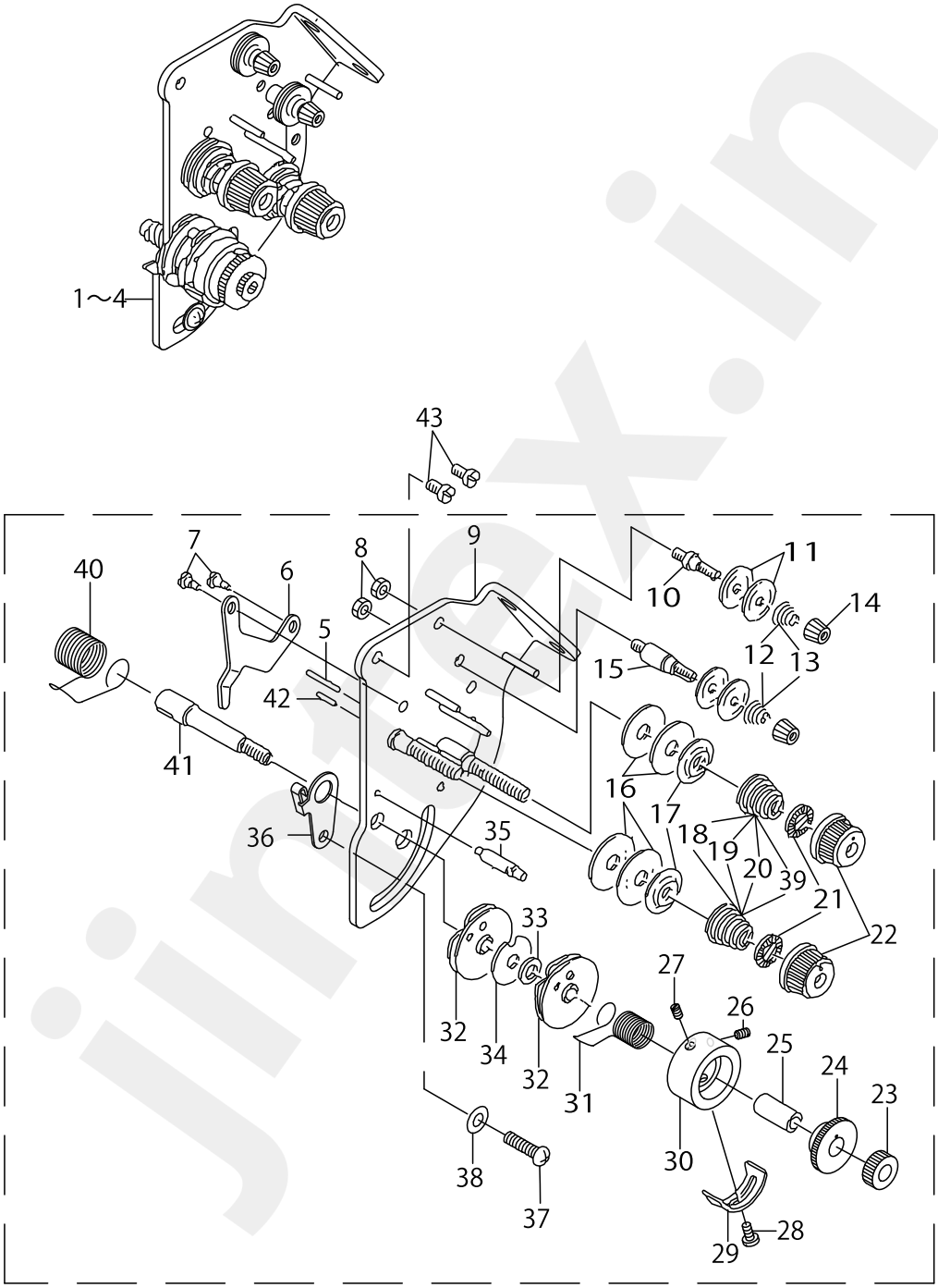

TENSION POST COMPONENTS

No.	Parts No.	Parts name	Remarks	Level	Cons	Qty
1	22618060	THREAD TENSION ASM., S	TYPE S			1
2	22618458	THREAD TENSION ASM., A	TYPE A			1
3	22618557	THREAD TENSION ASM.	TYPE G			1
4	22618656	THREAD TENSION ASM., F	TYPE F			1
5	22618300	TENSION RELEASE PIN, B		*		1
6	22618102	TENSION RELEASE LEVER		*		1
7	SD0470281SP	HINGE SCREW D=4.7 H=2.8		*		2
8	NS6110310SP	NUT 11/64-40		*		2
9	22618052	TENSION BASE PLATE ASM.		*		1
10	10124204	THREAD TENSION POST, A		*		1
11	10741106	FIRST THREAD TENSION PLATE		*		4
12	11045101	THREAD TENSION SPRING	TYPE A, F, S	*		2
13	11093606	THREAD TENSION SPRING	TYPE G	*		2
14	11072402	THREAD TENSION NUT		*		2
15	10124303	THREAD TENSION POST, B		*		1
16	B3126012000	THREAD TENSION DISK		*		4
17	22617906	THREAD TENSION DISK PRESSER		*		2
18	B3129012A00	TENSION SPRING	TYPE S	*		2
19	D3129555D00	THREAD TENSION SPRING	TYPE A	*		2
20	B3114232000	THREAD TENSION SPRING	TYPE G	*		2
21	B3112704000	TENSION SPRING BUSHING		*		2
22	11956802	THREAD TENSION KNOB, BLUE		*		2
23	22617807	NUT		*		1
24	22617708	TAKE-UP SPRING GUIDE		*		1
25	B3141527000	PRESSER COLLAR		*		1
26	22618904	SET SCREW		*		1
27	22618904	SET SCREW		*		1
28	SS7090510SP	SCREW 9/64-40 L= 4.6		*		1
29	B3138527000	ADJUSTING PLATE B		*		1
30	22617609	THREAD TENSION POST		*		1
31	22618805	THREAD TAKE-UP SPRING B		*		1
32	B31375270A0	TAKE-UP SPRING GUIDE ASM.		*		2
33	B3139527000	COLLAR		*		1
34	B3142527000	TAKE-UP SPRING GUIDE PLATE		*		1
35	B3143527000	TAKE-UP SPRING GUIDE STUD		*		1
36	10697506	THREAD TENSION BRACKET, A		*		1
37	SS4110615SP	SCREW 11/64-40 L=6		*		1
38	WP0501016SD	WASHER 5X10.5X1		*		1
39	B3121352000	TENSION SPRING	TYPE F	*		2
40	22618706	THREAD TAKE-UP SPRING A		*		1
41	10697605	THREAD TAKE-UP SPRING STUD		*		1
42	22618201	TENSION RELEASE PIN, A		*		1
43	SS4120615SP	SCREW 3/16-28 L=6				2

jintex.in

HOOK & HOOK DRIVING SHAFT COMPONENTS

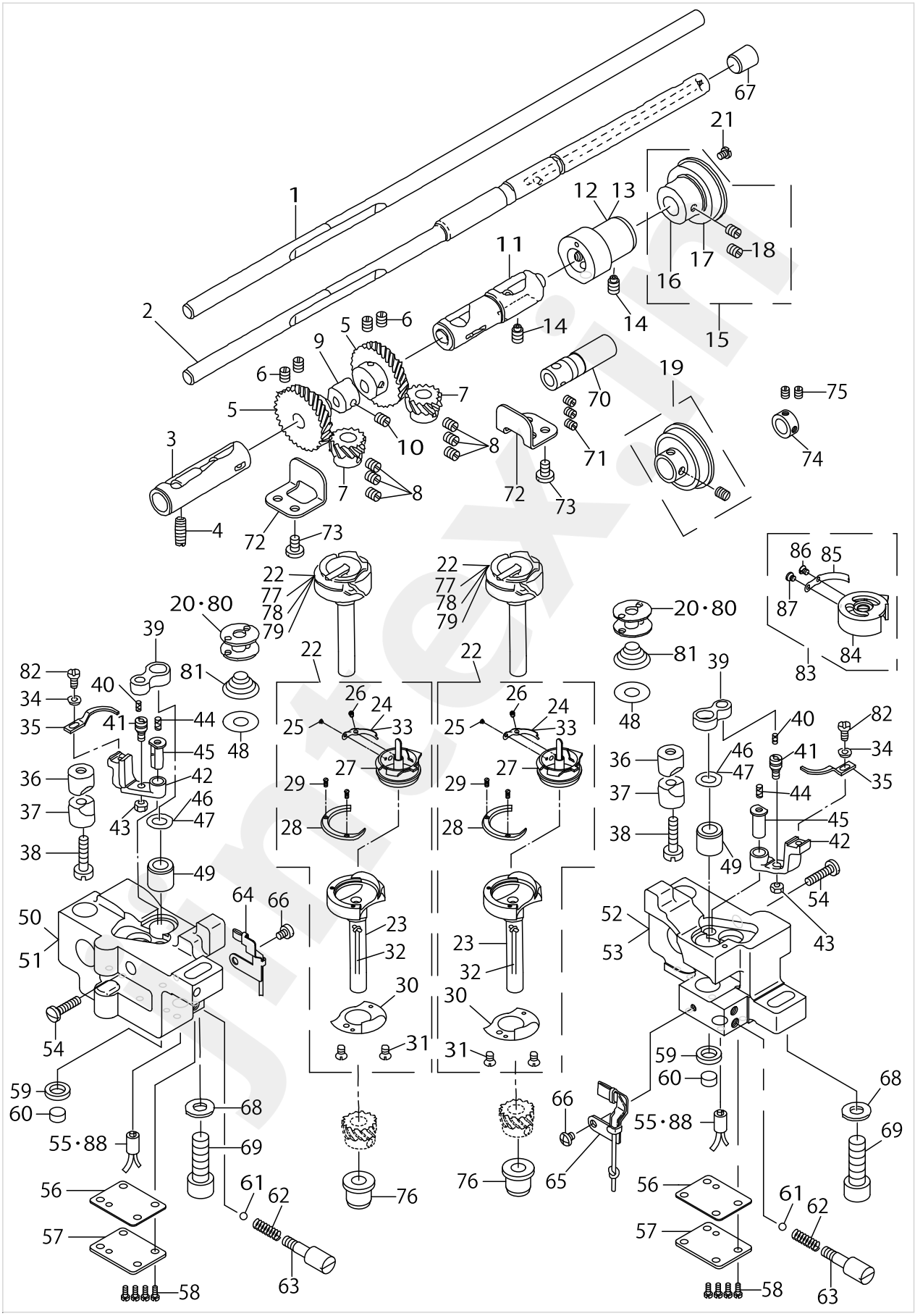

jintex.in

HOOK & HOOK DRIVING SHAFT COMPONENTS

No.	Parts No.	Parts name	Remarks	Level	Cons	Qty
1	22623102	LOWER SHAFT B	FOR LH-3128			1
2	10108512	HOOK DRIVING SHAFT	FOR LH-3128-7			1
3	B18025120A0A	BUSHING ASM., FRONT	SELECTIVE PARTS			1
4	SS8151150SP	SCREW 15/64-28 L=10.5				1
5	B1816512000	HOOK DRIVING SHAFT, LARGE				2
6	SS8660810TP	SCREW 1/4-40 L=8				4
7	10112001	HOOK SHAFT GEAR, A	SELECTIVE PARTS			2
8	SS8660530TP	SCREW 1/4-40 L= 4.5				6
9	22609804	FEED DRIVING CAM				1
10	SS8660530TP	SCREW 1/4-40 L= 4.5				1
11	B18035150A0	BUSHING ASM., INTERMEDIATE	SELECTIVE PARTS			1
12	22611701	PLUNGER BUSHING, B	FOR LH-3128			1
13	10108611	PLUNGER BUSHING	FOR LH-3128-7			1
14	SS8151150SP	SCREW 15/64-28 L=10.5				2
15	22611651	THRUST COLLAR ASM., B	FOR LH-3128			1
16	22611602	THRUST COLLAR, B		*		1
17	SB120000200	BEARING 20X42		*		1
18	SS8661030SP	SCREW 1/4-40 L=10		*		2
19	10611457	THRUST COLLAR ASM.	FOR LH-3128-7			1
20	B9117051000	BOBBIN	FOR LH-3128			2
21	SS7120760SP	SCREW 3/16-28 L= 7.0				2
22	22612055	HOOK ASM.	SELECTIVE PARTS			2
23	22612006	HOOK		*		2
24	22612402	BOBBIN CASE TENSION SPRING		*		2
25	10110500	TENSION SPRING INSTALLING SCRE		*		2
26	10110609	TENSION ADJUSTING SCREW		*		2
27	22612105	SWING HOOK		*		2
28	22612204	HOOK GIB		*		2
29	10112803	SCREW		*		4
30	22612303	NEEDLE POSITIONER		*		2
31	10112902	SCREW		*		4
32	22612501	LILYYARN		*		2
33	22612808	LOWER THREAD TENSION SPRING	SELECTIVE PARTS	*		1
34	WP0371016SD	WASHER 3.7X8X1				2
35	22613509	BOBBIN CASE OPENING LEVER				2
36	10109908	SADDLE INSTALLING BLOCK, UPPER				2
37	10112407	SADDLE INSTALLING BLOCK, LOWER				2
38	SS6153040SP	SCREW 15/64-28 L=30				2
39	B1820051000	BOBBIN CASE OPENING LEVER LINK				2
40	CQ202000000	OIL WICK				0.03
41	B1821051000	CRANK SCREW STUD				2
42	B1822051000	OPENING LEVER CRANK				2
43	NS6110420SP	NUT 11/64-40				2
44	CQ202000000	OIL WICK				0.05
45	B1823051000	OPENING LEVER CRANK PIN				2
46	22614101	THRUST WASHER, B	SELECTIVE PARTS FOR LH-3128			2

jintex.in

HOOK & HOOK DRIVING SHAFT COMPONENTS

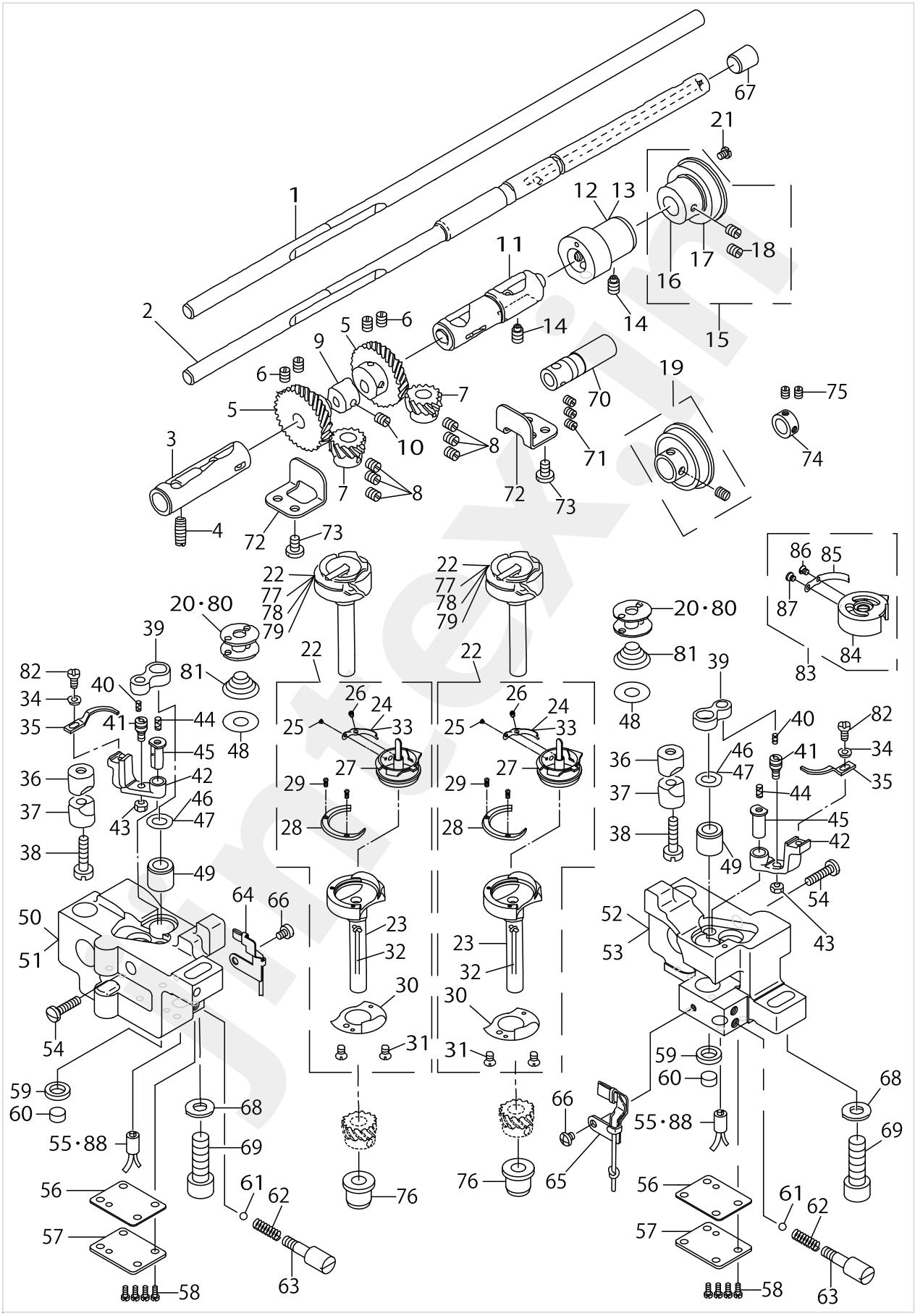

HOOK & HOOK DRIVING SHAFT COMPONENTS

No.	Parts No.	Parts name	Remarks	Level	Cons	Qty
47	10111201	THRUST WASHER, F	SELECTIVE PARTS FOR LH-3128-7			2
48	22653802	SHEET	FOR LH-3128-7			2
49	22613905	HOOK SHAFT UPPER METAL				2
50	22613103	HOOK SHAFT SADDLE, LEFT	FOR LH-3128			1
51	22653604	HOOK SHAFT SADDLE, LEFT	FOR LH-3128-7			1
52	22613004	HOOK SHAFT SADDLE, RIGHT	FOR LH-3128			1
53	22653505	HOOK SHAFT SADDLE, RIGHT	FOR LH-3128-7			1
54	SS7111810SP	SCREW 11/64-40 L=18				2
55	22615454	RUBBER BUSHING ASM.				2
56	22615108	GASKET				2
57	22615009	HOOK SHAFT SADDLE COVER				2
58	SS4110815SP	SCREW 11/64-40 L=8				8
59	22615306	FELT HOLDER				2
60	22615207	FELT				2
61	22615702	OIL ADJUSTING BALL				2
62	D3171415B0H	PRESSER SPRING				2
63	22615801	OIL ADJUSTING SCREW				2
64	22615959	OIL WICK HOLDER ASM. LEFT				1
65	22616254	OIL WICK HOLDER ASM. RIGHT				1
66	SS4110515SP	SCREW 11/64-40 L=5				2
67	TA0500601M0	PLUG D=5X5.4 L=6	FOR LH-3128-7			1
68	WP0850002SP	WASHER 8.5X18X1.6				2
69	SM6082502TP	SCREW M8 L=25				2
70	22611909	OIL PUMP SHAFT	FOR LH-3128			1
71	SS8660530TP	SCREW 1/4-40 L= 4.5	FOR LH-3128			3
72	22613608	GEAR GUIDE				2
73	SS7110710SP	SCREW 11/64-40 L=7				4
74	CS1471012SH	THRUST COLLAR D=14.72 W=10	FOR LH-3128-7			1
75	SS8660530TP	SCREW 1/4-40 L= 4.5	FOR LH-3128-7			2
76	22613400	HOOK DRIVING SHAFT BUSHING				2
77	22612758	HOOK ASM.	SELECTIVE PARTS			2
78	22653158	RATCHET HOOK ASM.	SELECTIVE PARTS			2
79	22653059	CAP HOOK ASM.	SELECTIVE PARTS			2
80	10210805	HARD ALUMITE BOBBIN	FOR LH-3128-7			2
81	10111508	SPRING	FOR LH-3128-7			2
82	SS6090810SP	SCREW 9/64-40 L= 7.5				2
83	22612659	BOBBIN CASE ASM.				1
84	22612600	BOBBIN CASE		*		2
85	22688501	TENSION ADJUSTING SPRING		*		2
86	22612907	TENSION ADJUSTING SCREW		*		2
87	10110500	TENSION SPRING INSTALLING SCRE		*		2
88	22615462	RUBBER BUSHING ASM.	OPTIONAL PARTS			2

jintex.in

FEED MECHANISM COMPONENTS

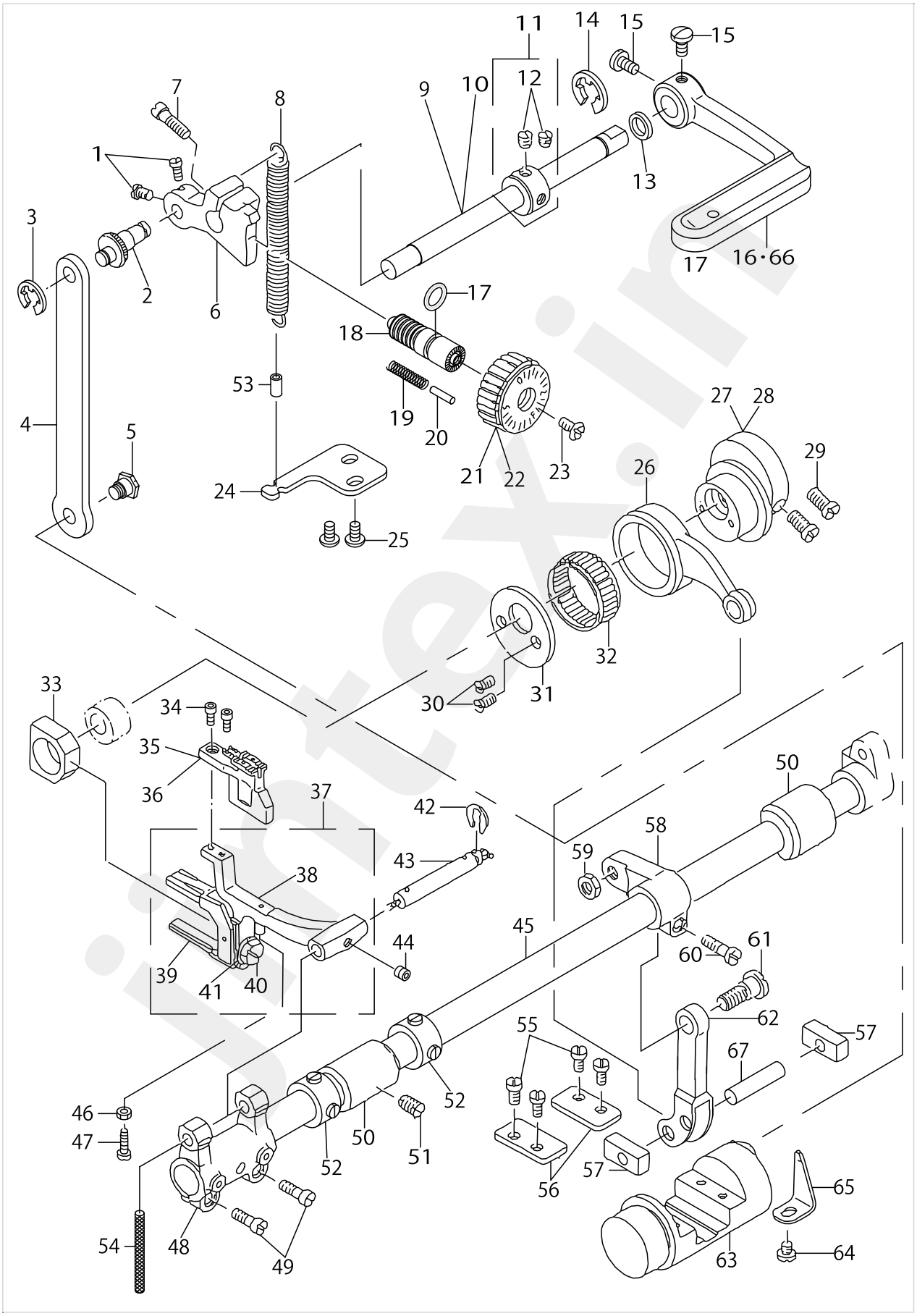

jintex.in

FEED MECHANISM COMPONENTS

No.	Parts No.	Parts name	Remarks	Level	Cons	Qty
1	SS6090670TP	SCREW 9/64-40 L=6				2
2	22610109	ROD PIN				1
3	RE0500000K0	E-RING				1
4	22610208	FEED REGULATOR CONNECTING ROD				1
5	SD0800422CP	HINGE SCREW D= 8 H= 4.2				1
6	22610000	FEED REGULATOR				1
7	SS7121410TP	SCREW 3/16-28 L=14				1
8	22610307	FEED REGULATOR SPRING				1
9	22610604	REVERSE FEED SHAFT				1
10	22652101	REVERSE FEED SHAFT	FOR LH-3128-7-WB, -OB			1
11	CS102121ASH	THRUST COLLAR ASM. D=10.2 W=12				1
12	SS8660610TP	SCREW 1/4-40 L=6		*		2
13	10108009	OIL SEAL				1
14	RE0900000K0	E-RING 9				1
15	SS7120910SP	SCREW 3/16-28 L=9				2
16	22610505	REVERSE FEED CONTROL LEVER				1
17	RO092270200	RUBBER RING				1
18	22911804	FEED REGULATOR SCREW				1
19	22912109	FEED REGULATOR PIN SPRING				1
20	22912000	FEED REGULATOR PIN				1
21	22911903	FEED DIAL				1
22	22940506	FEED DIAL	FOR LH-3128, STITCH SPEC. F			1
23	SS6121860SP	SCREW 3/16-28 L=18				1
24	22610406	SPRING BRACKET				1
25	SS4110815SP	SCREW 11/64-40 L=8				2
26	22609200	FEED ROCK SHAFT CONNECTING ROD				1
27	22609002	FEED DRIVE ECCENTRIC CAM, B	FOR LH-3128			1
28	22652002	FEED DRIVE ECCENTRIC CAM	FOR LH-3128-7			1
29	SS6661110SP	SCREW 1/4-40 L=11				2
30	SS7110710SP	SCREW 11/64-40 L=7				2
31	22609101	CAM COVER				1
32	B1636581B00	NEEDLE BEARING B				1
33	B1610512000	FEED DRIVING SLIDE BLOCK				1
34	SS6580752TP	SCREW 1/8-40 L=7				2
35	22630602	FEED DOG 1/4	EXCHANGING GAUGE PARTS F-OR LH-3128(SEE P.27～33)			1
36	10238202	FEED DOG 1/4	EXCHANGING GAUGE PARTS F-OR LH-3128-7(SEE P.27～33)			1
37	22609754	FEED BAR ASM.				1
38	22609705	FEED BAR		*		1
39	10107902	FEED BAR FORK		*		1
40	SS9151440CP	SCREW 15/64-28 L=14		*		1
41	WP0621016SD	WASHER 6.2X13X1		*		1
42	RE0500711KP	SNAP RING 5				1
43	B1604012000A	FEED BAR SHAFT				1
44	SM8050502TP	SCREW M5 L=5				1
45	22609408	FEED ROCK SHAFT				1
46	NS6080210SP	NUT 1/8-44				1

jintex.in

FEED MECHANISM COMPONENTS

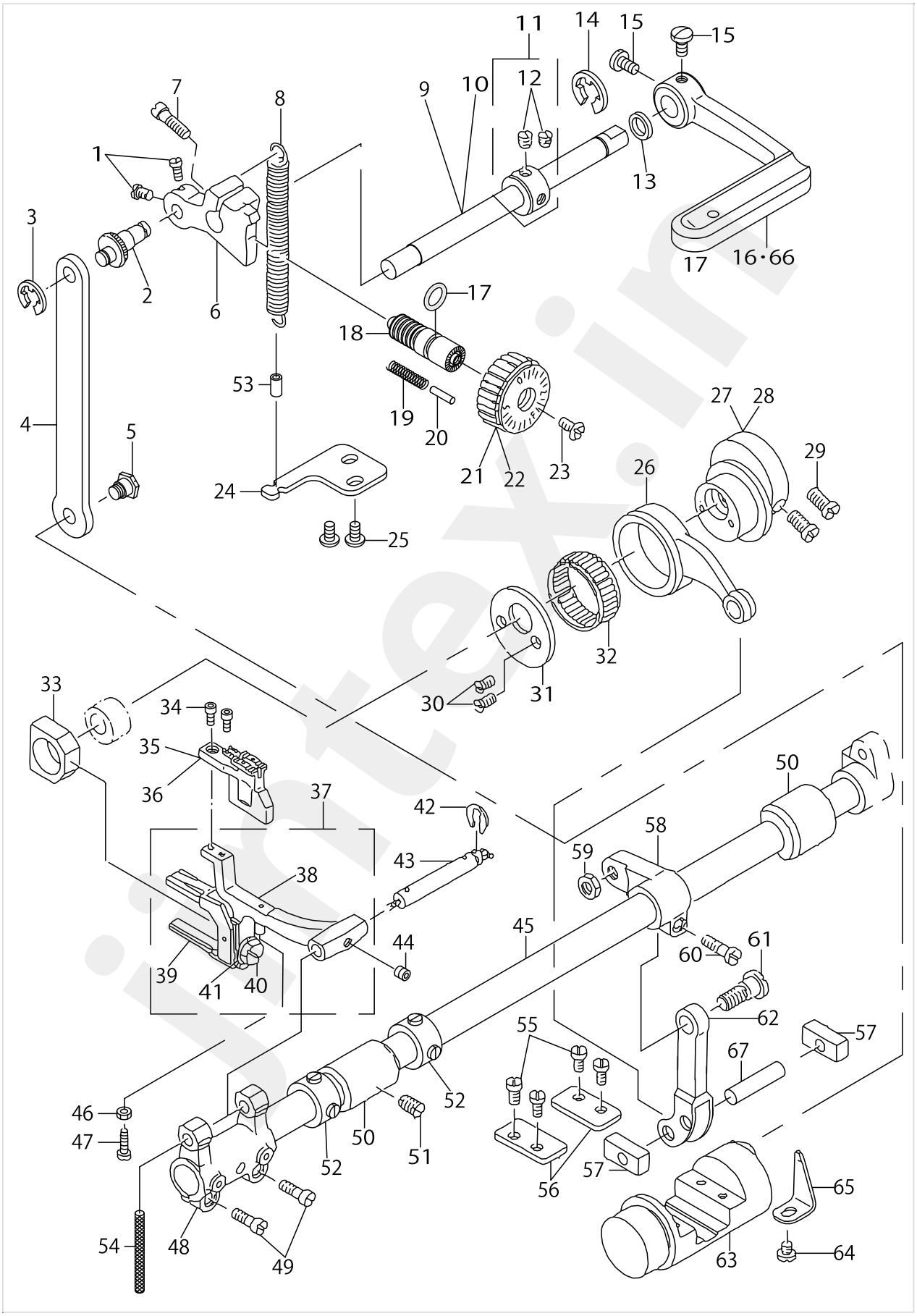

jintex.in

FEED MECHANISM COMPONENTS

No.	Parts No.	Parts name	Remarks	Level	Cons	Qty
47	SS6081810SP	SCREW 1/8-44 L=18.0				1
48	B1603512000	FEED ROCKER				1
49	SS7111310TP	SCREW 11/64-40 L=12.8				2
50	10106102	BUSHING				2
51	SS8151150SP	SCREW 15/64-28 L=10.5				1
52	22904155	MAIN SHAFT THRUST COLLAR ASM.				2
53	BT0500300EA	OIL TUBE				0.09
54	CQ252000000	OIL WICK				0.26
55	SS7110910SP	SCREW 11/64-40 L=8.5				4
56	10315505	PLATE				2
57	22609606	FEED DRIVING ROCKER BLOCK, S				2
58	22609309	FEED ROCKER SHAFT CRANK				1
59	NS6680320SP	NUT 9/32-28				1
60	SS6121610TP	SCREW 3/16-28 L=15.5				1
61	SD0900701TP	HINGE SCREW D= 9 H= 7				1
62	10315208	FEED ROCK CONNECTING ROD				1
63	10315455	FEED DRIVING ROCKER ASM.				1
64	SS7110510SP	SCREW 11/64-40 L=5				1
65	B1633470000	STOPPER PLATE				1
66	22610901	REVERSE FEED CONTROL LEVER, F	FOR LH-3128, STITCH SPEC. F			1
67	B1653470000	PIN				1

jintex.in

jintex.in

PRESSER BAR & TENSION RELEASE COMPONENTS

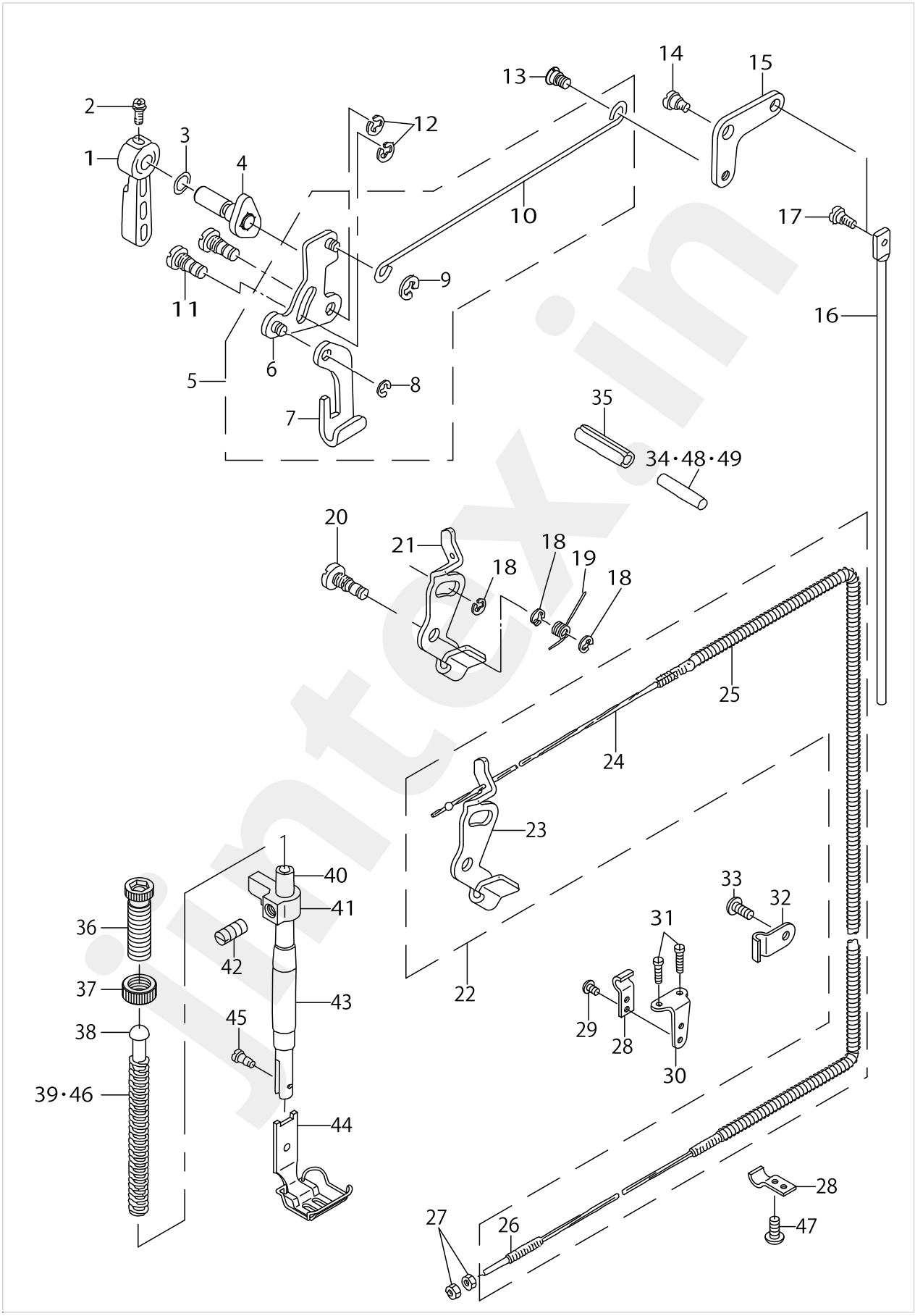

PRESSER BAR & TENSION RELEASE COMPONENTS

No.	Parts No.	Parts name	Remarks	Level	Cons	Qty
1	22907802	HAND LIFTER				1
2	B1521555000	SCREW				1
3	RO037180100	RUBBER RING				1
4	22908552	HAND LIFTER CAM ASM.				1
5	22608152	LIFTING LEVER ROD ASM.				1
6	11006350	HAND LIFTER LINK		*		1
7	11006202	LIFTING LEVER		*		1
8	11007309	E-RING		*		1
9	RE0500000K0	E-RING		*		1
10	22608103	LIFTING LEVER CONNECTING ROD		*		1
11	40034204	HAND LIFTER SCREW				2
12	RE0500000K0	E-RING				2
13	22908909	HINGE SCREW				1
14	SD0720332SP	HINGE SCREW D= 7.24 H= 3.3				1
15	22908800	KNEE LIFTER LINK				1
16	10125201	CONNECTING ROD, VERTICAL				1
17	SD0600322SD	HINGE SCREW D=6 H=3.2				1
18	RE0500000K0	E-RING				3
19	22920201	RETURN SPRING				1
20	11018108	TENSION RELEASE SHAFT				1
21	22617104	TENSION RELEASE PLATE	FOR LH-3128			1
22	22654958	TENSION RELEASE PLATE ASM.	FOR LH-3128-7			1
23	22617104	TENSION RELEASE PLATE		*		1
24	11394509	WIRE CABLE		*		1
25	22654909	WIRE TUBE		*		1
26	D3159555B00	SET SCREW		*		1
27	NS6620310SP	NUT 3/16-32	FOR LH-3128-7			2
28	D3164555B00	OUTER PRESSER PLATE	FOR LH-3128-7			2
29	SS4110715SP	SCREW 11/64-40 L=7	FOR LH-3128-7			1
30	D3163555B00A	FLEXIBLE TUBE SUPPORT PLATE	FOR LH-3128-7			1
31	SS4111215SP	SCREW 11/64-40 L=12	FOR LH-3128-7			2
32	22620801	PIPE HOLDER	FOR LH-3128-7			1
33	SS4111015SP	SCREW 11/64-40 L=10	FOR LH-3128-7			1
34	22617005	PUSH BAR				1
35	PS0600502KP	SPRING PIN				1
36	22907505	PRESSER SPRING REGULATOR				1
37	22907604	PRESSER SPRING REGULATOR NUT				1
38	22907703	PRESSER GUIDE BAR				1
39	B1505227T00A	PRESSER SPRING T				1
40	B1501581000	PRESSER BAR				1
41	40017058	PRESSER BAR HOLDER				1
42	SS8660810TP	SCREW 1/4-40 L=8				1
43	22907109	PRESSER BAR BUSHING, LOWER				1
44	10152957	PRESSER FOOT ASM. 1/4	EXCHANGING GAUGE PARTS (SEE P.27～33)			1
45	SS7090910TP	SCREW 9/64-40 L= 8.5				1
46	22608400	SPRING, F	FOR LH-3128,TYPE F			1

jintex.in

PRESSER BAR & TENSION RELEASE COMPONENTS

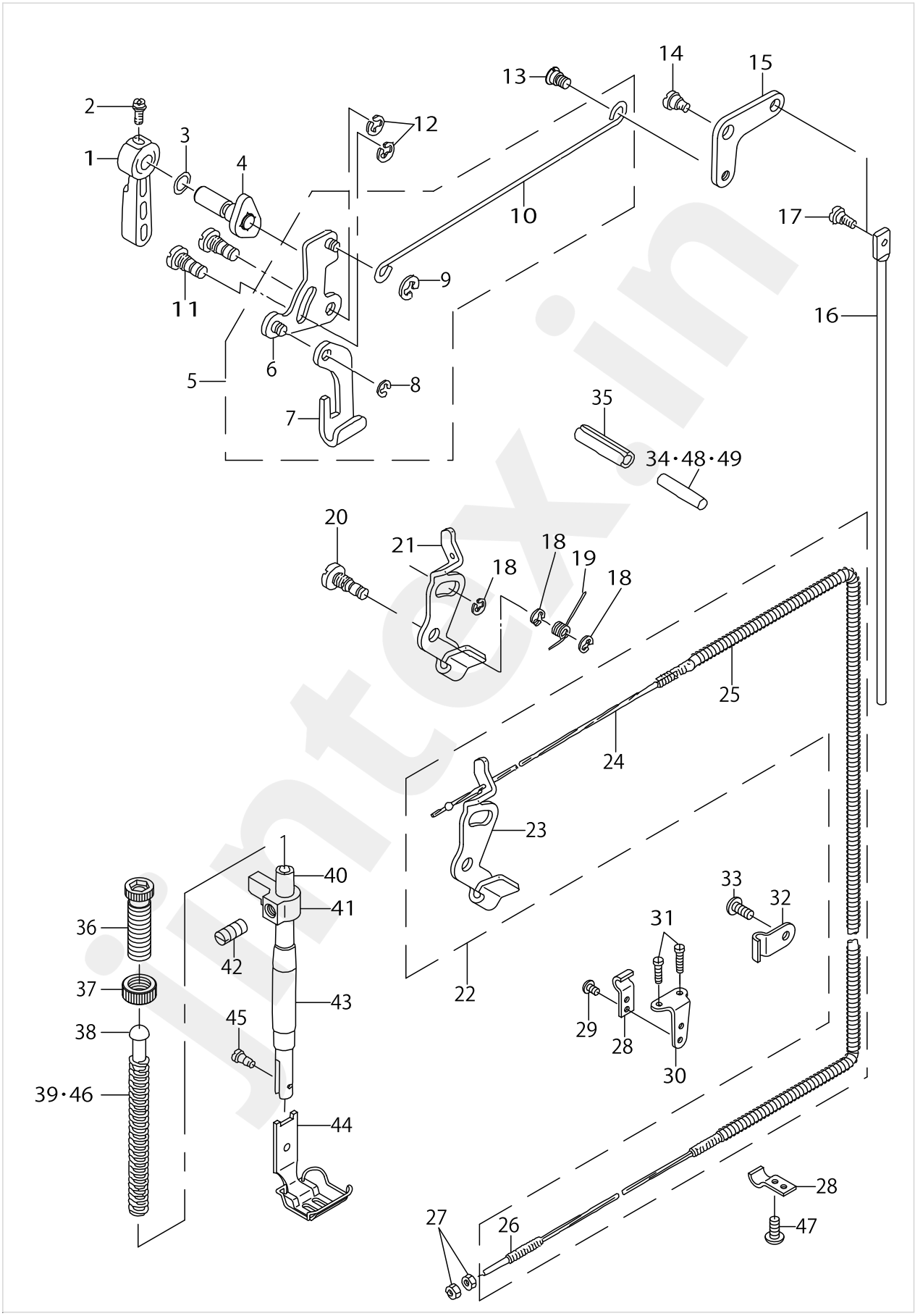

PRESSER BAR & TENSION RELEASE COMPONENTS

No.	Parts No.	Parts name	Remarks	Level	Cons	Qty
47	SS4110515SP	SCREW 11/64-40 L=5				1
48	40039672	PUSH BAR				1
49	40030133	PUSH BAR				1

jintex.in

jintex.in

THREAD TRIMMER MECHANISM COMPONENTS (FOR LH-3128-7)

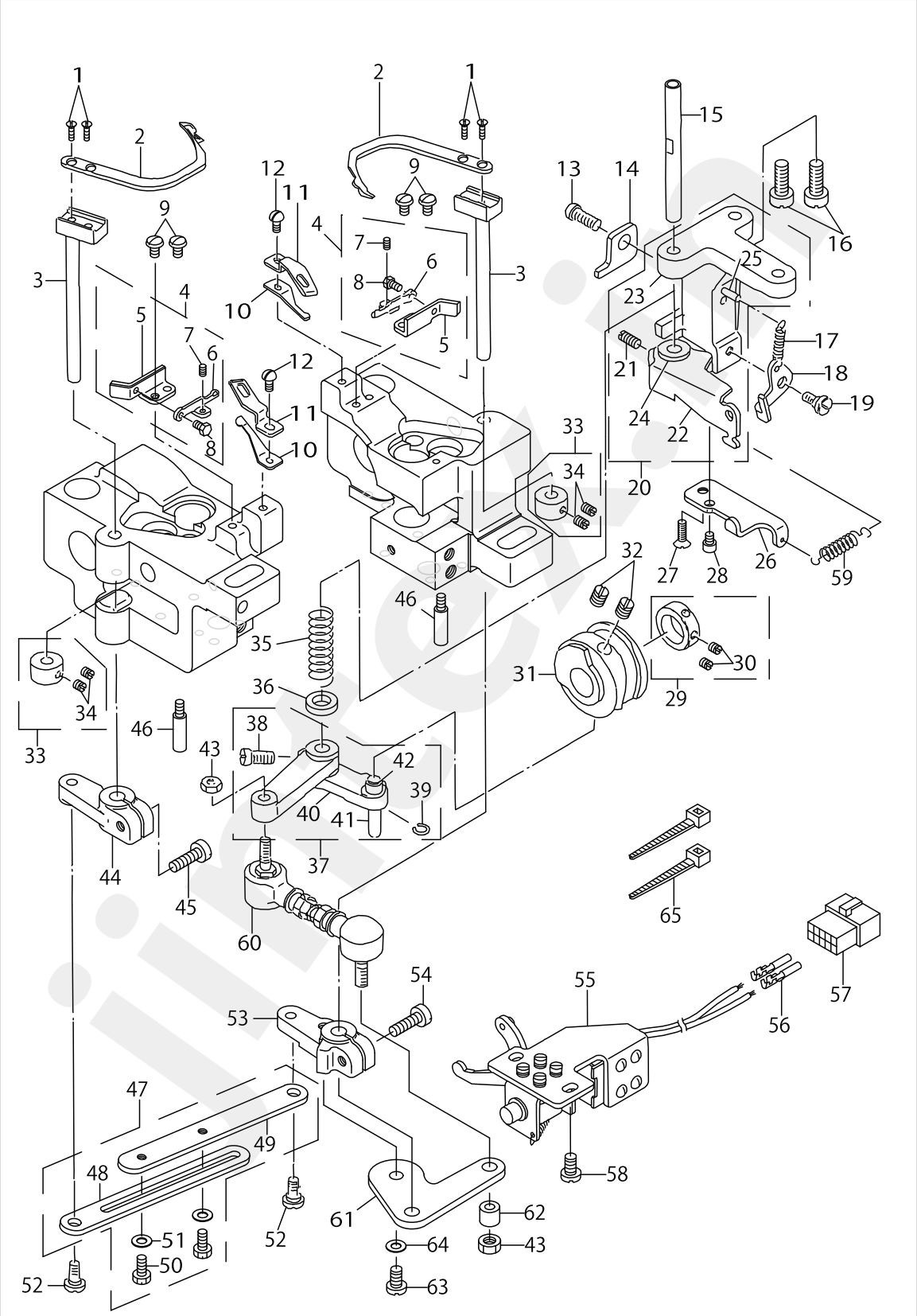

jintex.in

THREAD TRIMMER MECHANISM COMPONENTS (FOR LH-3128-7)

No.	Parts No.	Parts name	Remarks	Level	Cons	Qty
1	SS2080810SP	SCREW 1/8-44 L=7.5				4
2	10211605	MOVING KNIFE				2
3	10116051	MOVING KNIFE SHAFT ASM.				2
4	22654255	MOVING KNIFE SUPPORT ASM.				2
5	22654206	MOVING KNIFE SUPPORT PLATE		*		2
6	10211407	THREAD PRESSER ADJUSTING PLATE		*		2
7	SS8080610SP	SCREW 1/8-44 L=5.5		*		2
8	SS9080410SP	SCREW 1/8-44 L=4.3		*		2
9	SS5090610SP	SCREW 9/64-40 L=6				4
10	22655401	THREAD PRESSER				2
11	22655302	COUNTER KNIFE				2
12	SS7090710SP	SCREW 9/64-40 L= 6.8				2
13	SS6121212TP	SCREW 3/16-28 L=12.0				1
14	22654800	STOPPER, A				1
15	10116804	SHAFT				1
16	SS7151610SP	SCREW 15/64-28 L=16				2
17	B3418180000	SPRING				1
18	10117208	TENSION DISC RELEASE PLATE				1
19	SD0600271SP	HINGE SCREW D= 6 H= 2.7				1
20	22655153	LINK INSTALLING BASE ASM.				1
21	SS8111010TP	SCREW 11/64-40 L=9.5		*		1
22	22655104	TENSION DISC RELEASE ARM		*		1
23	10116606	LINK INSTALLING BASE		*		1
24	10117109	BUSHING		*		1
25	PS0300201KP	SPRING PIN 3.0X20		*		1
26	40012461	STOPPER PLATE				1
27	SS2110920TP	SCREW 11/64-40 L=8.5				1
28	SS6111052TP	SCREW				1
29	CS1470710SH	THRUST COLLAR ASM. D=14.72 W=7				1
30	SS8110410TP	SCREW 11/64-40 L= 3.5		*		2
31	22654107	THREAD TRIMMER CAM				1
32	SS8660810TP	SCREW 1/4-40 L=8				2
33	CS070081BSH	THRUST COLLAR ASM. D=7 W=8				2
34	SS8110510SP	SCREW 11/64-40 L=5		*		4
35	10116903	SPRING				1
36	WP0753016SZ	WASHER 7.5X16.0X3.0				1
37	10116754	CAM INSTALLING LINK ASM.				1
38	SS6151220SP	SCREW 15/64-28 L=11.5		*		1
39	D2430555B00	SNAP RING		*		1
40	10116705	CAM INSTALLING LINK		*		1
41	D2428555B00A	CAM ROLLER SHAFT		*		1
42	D2427555B00B	CAM ROLLER		*		1
43	NM6050001SP	NUT M5				2
44	22654404	DRIVING ARM, LEFT				1
45	SS6121610TP	SCREW 3/16-28 L=15.5				1
46	B1515051000	HAND LIFTER PIN				2
47	22654552	CONNECTING LINK ASM.				1

jintex.in

THREAD TRIMMER MECHANISM COMPONENTS (FOR LH-3128-7)

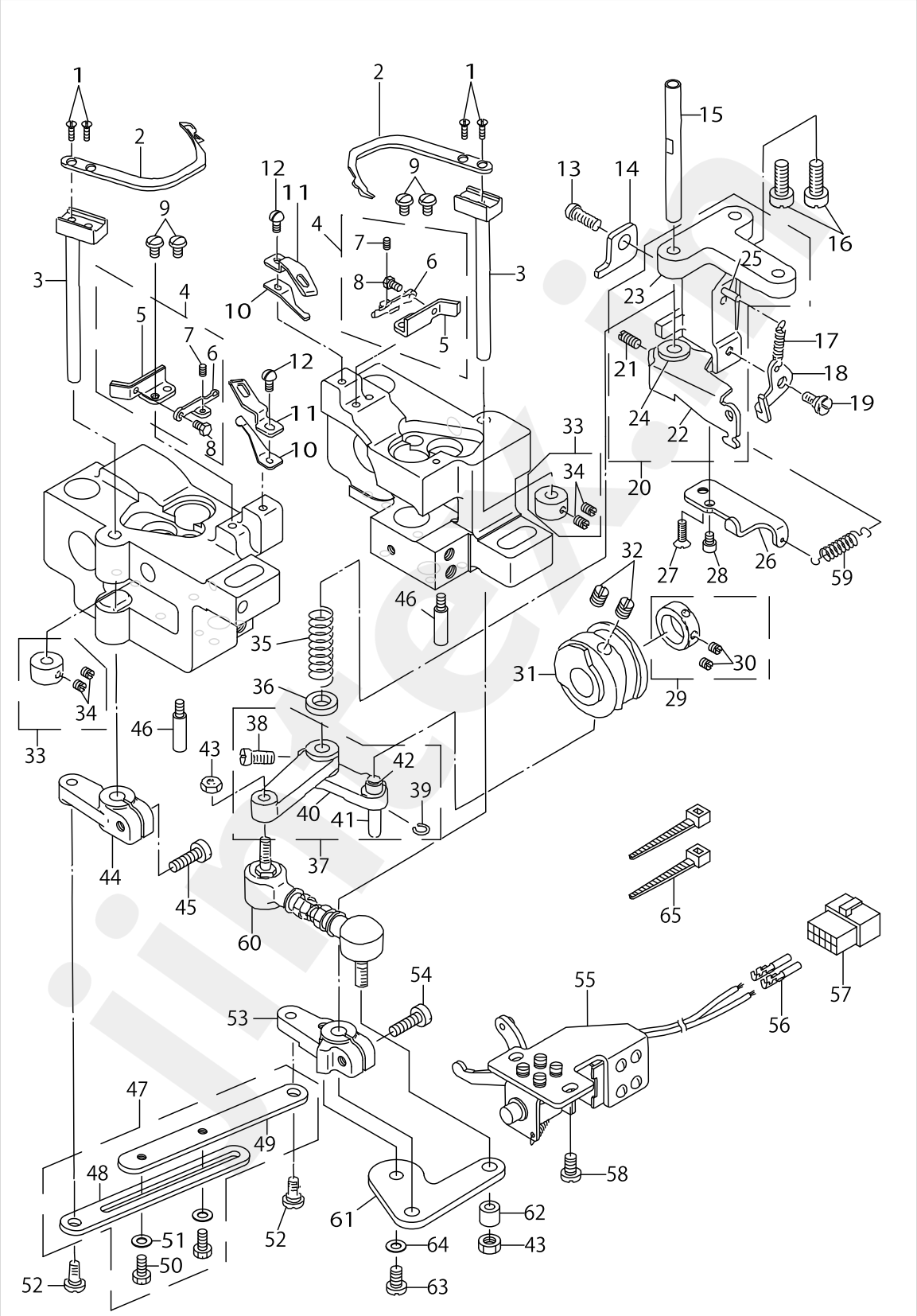

jintex.in

THREAD TRIMMER MECHANISM COMPONENTS (FOR LH-3128-7)

No.	Parts No.	Parts name	Remarks	Level	Cons	Qty
48	22654503	CONNECTING LINK, A		*		1
49	22654602	CONNECTING LINK, B		*		1
50	SS9111010SP	SCREW 11/64-40 L=9.5		*		2
51	WP0501016SD	WASHER 5X10.5X1		*		2
52	SD0650305TP	HINGE SCREW D= 6.5 H= 3				2
53	22654305	DRIVING ARM, RIGHT				1
54	SS6121610TP	SCREW 3/16-28 L=15.5				1
55	10117851	SOLENOID ASM.				1
56	HK03464000B	PIN CONTACT				2
57	HK034610140	HOUSING 14P				1
58	SS6151040SP	SCREW 15/64-28 L=10				2
59	B3041980000	SPRING				1
60	22655005	JOINT ROD				1
61	22654008	DRIVING ARM PLATE				1
62	B3417051000	REAR LIFTING BAR ROLLER				1
63	SS6120940SP	SCREW 3/16-28 L=9				1
64	WP0501016SD	WASHER 5X10.5X1				1
65	EA9500B0100	CABLE BAND				2

jintex.in

jintex.in

AUTOMATIC REVERSE FEED MECHANISM COMPONENTS (FOR LH-3128-7)

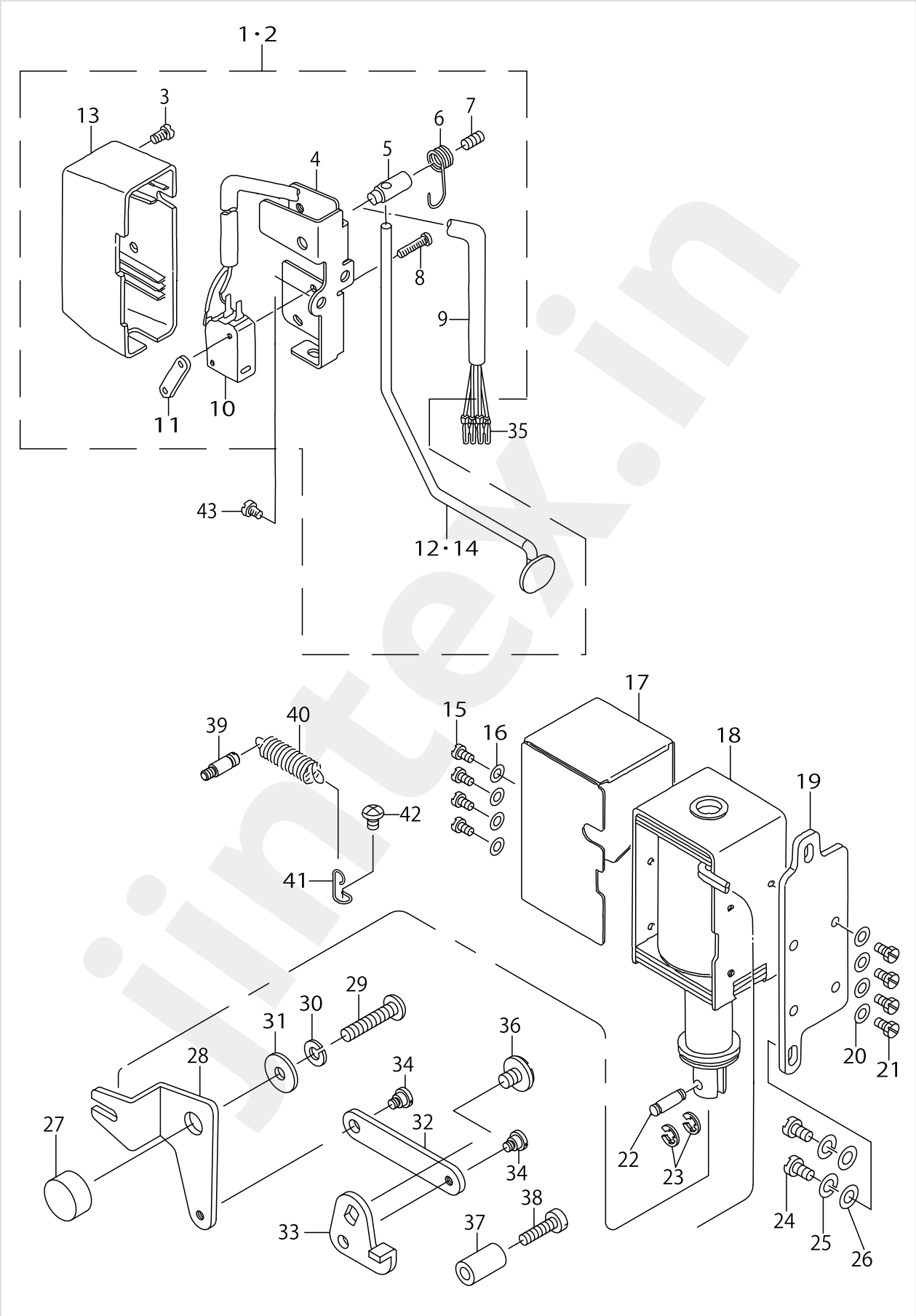

jintex.in

jintex.in

AUTOMATIC REVERSE FEED MECHANISM COMPONENTS (FOR LH-3128-7)

No.	Parts No.	Parts name	Remarks	Level	Cons	Qty
1	22656557	REVERSE FEED SWITCH ASM.				1
2	22656953	BACKWARD FEED SWITCH ASM., F	FOR LH-3128F-0B			1
3	SM4040655SP	SCREW M4 L=6		*		1
4	22656508	REVERSE FEED SWITCH BASE		*		1
5	11102100	REVERSE FEED SWITCH SHAFT		*		1
6	11102209	REVERSE FEED SWITCH SPRING		*		1
7	SM8040802SP	SCREW M4X0.7 L=8		*		1
8	SM4031501SC	SCREW M3 L=15		*		2
9	HW500070000	2-CORE CABTYRE CORD		*		1.4
10	HA001900000	MICROSWITCH		*		1
11	11102308	MICRO SWITCH PLATE		*		1
12	22656607	REVERSE FEED SWITCH LEVER		*		1
13	11072501	REVERSE FEED SWITCH COVER		*		1
14	22656904	SWITCH LEVER, F	FOR LH-3128F-0B	*		1
15	SS7110710SP	SCREW 11/64-40 L=7				4
16	WP0501016SD	WASHER 5X10.5X1				4
17	10161305	SOLENOID COVER				1
18	10119105	REVERSE FEED SOLENOID, AC24V				1
19	10119204	SOLENOID INSTALLING PLATE				1
20	WP0501016SD	WASHER 5X10.5X1				4
21	SS9111010SP	SCREW 11/64-40 L=9.5				4
22	D2464555B00	LINK DRIVING MAGNET PIN				1
23	RE0400000K0	E-RING 4				2
24	SS7151210SP	SCREW 15/64-28 L=12				2
25	WS0631510KP	SPRING WASHER				2
26	WP0621016SD	WASHER 6.2X13X1				2
27	22656409	LINK FULCULUM				1
28	22656300	REVERSE FEED LINK, L				1
29	SS4153015SP	PAN-SCREW 15/64-28 L=30				1
30	WS0610002KP	SPRING WASHER				1
31	WP0612056SD	WASHER 6.1X18.5X2				1
32	22656201	REVERSE FEED LINK, (2)				1
33	22656102	REVERSE FEED LINK, (1)				1
34	SD0640321SP	HINGE SCREW D= 6.35 H= 3.2				2
35	HK03464000B	PIN CONTACT				4
36	SS7120760SP	SCREW 3/16-28 L= 7.0				1
37	22952501	BACK LEVER STOPPER				1
38	SS6121840SP	SCREW 3/16-28 L=18				1
39	26226407	TENSION SPRING HOOK				1
40	26226209	SPRING				1
41	22656003	SPRING SUSPENSION				1
42	SS4120615SP	SCREW 3/16-28 L=6				1
43	SS4120615SP	SCREW 3/16-28 L=6				2

jintex.in

WIPER MECHANISM COMPONENTS (FOR LH-3128-7)

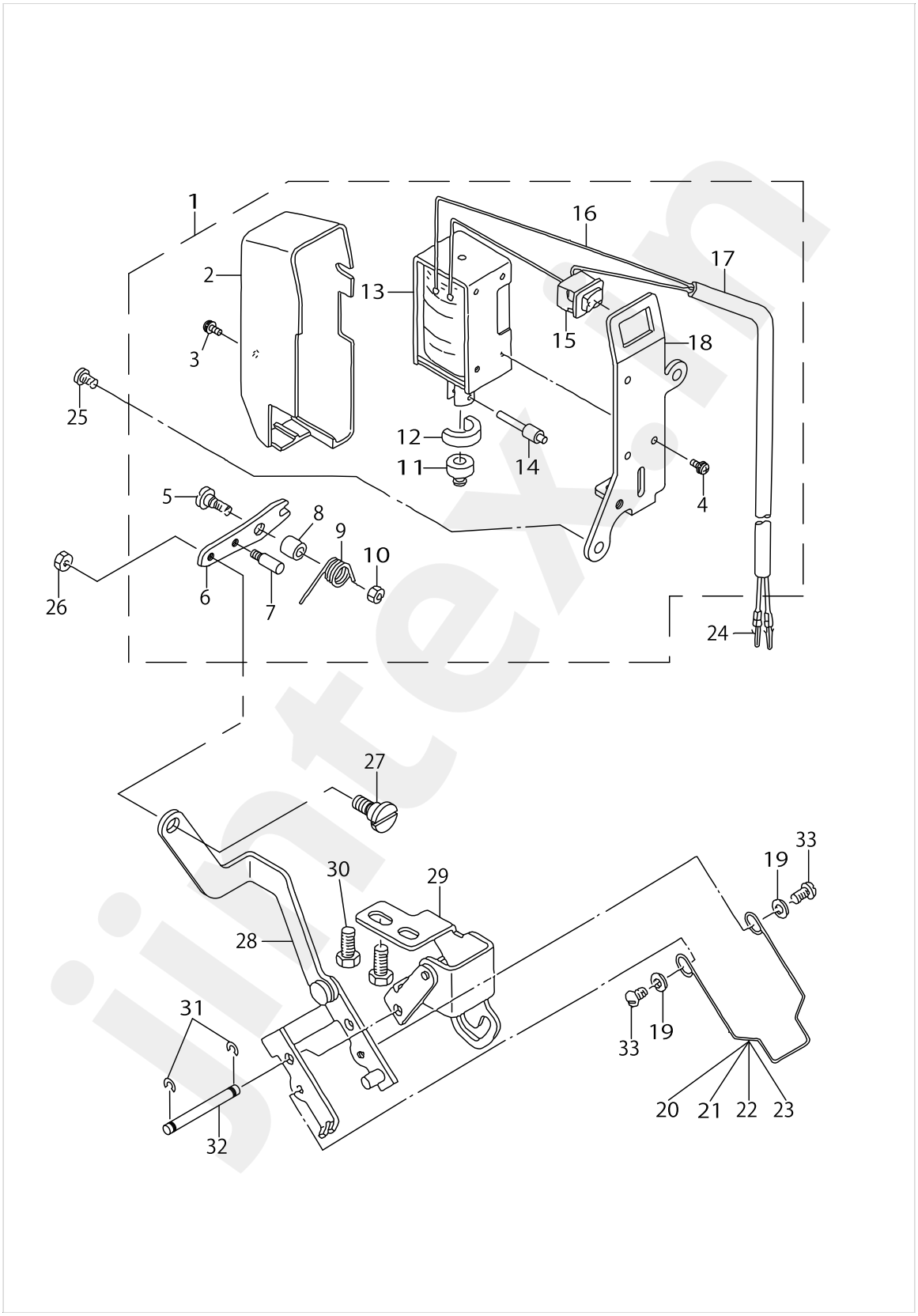

jintex.in

jintex.in

WIPER MECHANISM COMPONENTS (FOR LH-3128-7)

No.	Parts No.	Parts name	Remarks	Level	Cons	Qty
1	22657159	WIPER SOLENOID ASM.				1
2	11072709	WIPER COVER		*		1
3	SL4030891SC	SCREW M3X8		*		1
4	SL4030891SC	SCREW M3 X 6		*		3
5	SD0650321TP	HINGE SCREW D=6.5 H=3.2		*		1
6	22657209	WIPER LINK, A		*		1
7	40009196	SUSPENSION SCREW		*		1
8	11110707	WIPER HINGE SCREW COLLAR		*		1
9	22657308	WIPER SPRING		*		1
10	NS6110310SP	NUT 11/64-40		*		1
11	11110400	WIPER RUBBER A		*		1
12	11110509	WIPER RUBBER B		*		1
13	11110301	WIPER SOLENOID		*		1
14	22957104	WIPER SOLENOID SHAFT		*		1
15	HA000590000	POWER SWITCH		*		1
16	HW200390000	ELECTRIC WIRE		*		0.1
17	HW500070000	2-CORE CABTYRE CORD		*		1.4
18	22657100	WIPER SOLENOID BASE		*		1
19	WP0371016SD	WASHER 3.7X8X1				2
20	10209203	WIPER 3/32″-3/8	SELECTIVE PARTS			1
21	10209500	WIPER	SELECTIVE PARTS			1
22	10209807	WIPER	SELECTIVE PARTS			1
23	10209906	WIPER	SELECTIVE PARTS			1
24	HK03464000B	PIN CONTACT				2
25	SS4120615SP	SCREW 3/16-28 L=6				1
26	NS6090310SP	NUT 9/64-40				1
27	SD0500301SP	HINGE SCREW D= 5 H= 3				1
28	22657050	WIPER LINK ASM., 2				1
29	10208551	WIPER BASE ASM.				1
30	SS9111010SP	SCREW 11/64-40 L=9.5				2
31	RE0320000K0	E-RING 3.2				2
32	10208700	WIPER LINK SHAFT				1
33	SS3090520SP	SCREW 9/64-40 L=4.5				2

jintex.in

jintex.in

LUBRICATION COMPONENTS

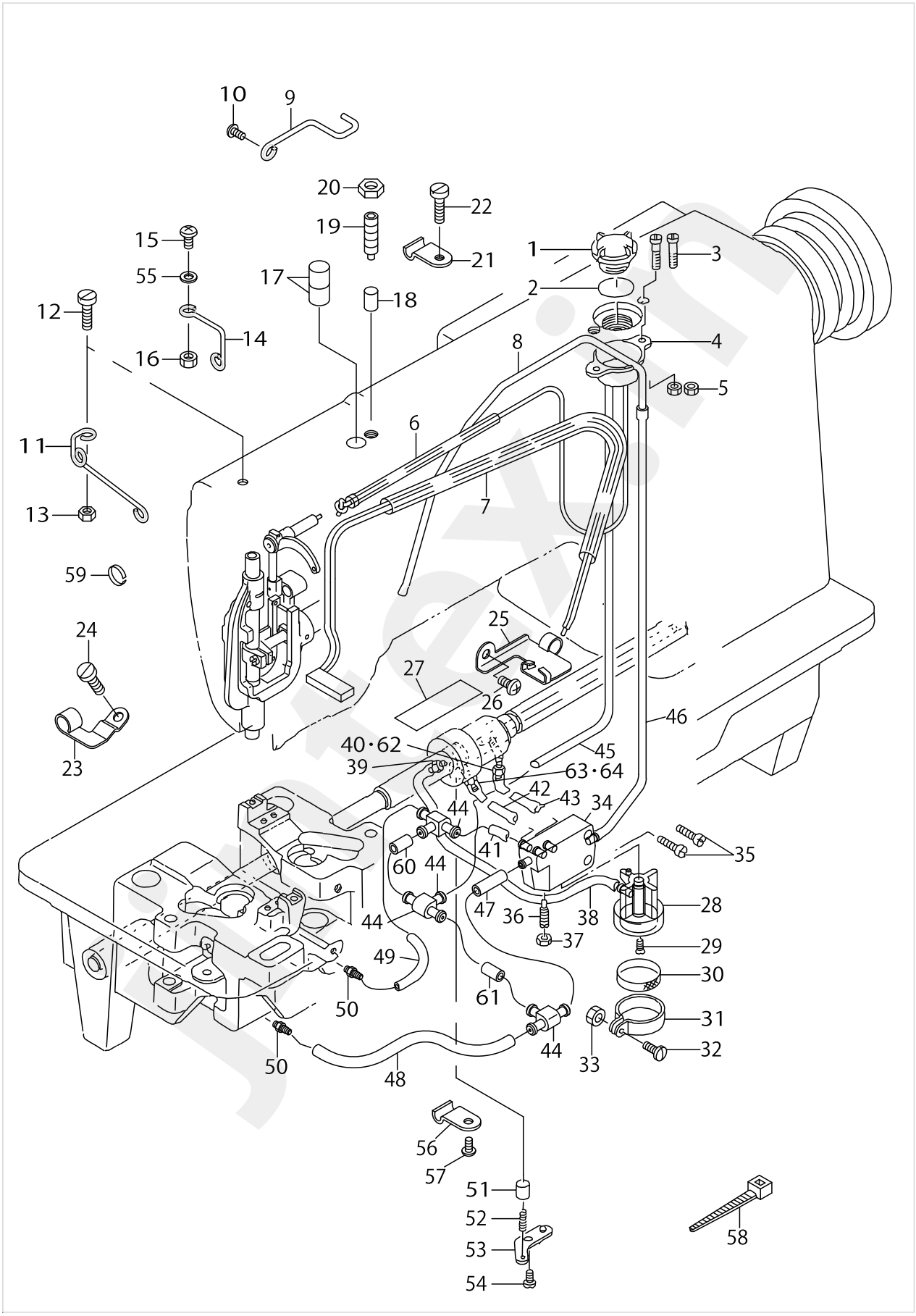

jintex.in

LUBRICATION COMPONENTS

No.	Parts No.	Parts name	Remarks	Level	Cons	Qty
1	22924708	OIL SIGHT WINDOW				1
2	RO195240100	RUBBER RING				1
3	SS4111815SP	SCREW 11/64 L=18				2
4	10216703	OIL TANK				1
5	NS6110310SN	NUT 11/64-40				2
6	22620355	OIL PIPE ASM.				1
7	22620454	FELT ASM.				1
8	22620702	OIL TUBE				1
9	22620108	PIPE HOLDER, B				1
10	SS4110715SP	SCREW 11/64-40 L=7				1
11	22619209	OIL WICK GUIDE				1
12	SS6121610TP	SCREW 3/16-28 L=15.5				1
13	NS6120310SP	NUT 3/16-28				1
14	22620504	OIL WICK HOLDER				1
15	SS4111215SP	SCREW 11/64-40 L=12				1
16	NS6110420SP	NUT 11/64-40				1
17	B3517009000	OIL FELT REAR				2
18	22619415	OIL ADJUSTING SHAFT				1
19	SS8701782TP	SCREW 5/16-24 L=17.0				1
20	NS6700420SP	NUT 5/16-24				1
21	22620801	PIPE HOLDER				1
22	SS6111610SP	SCREW 11/64-40 L=16				1
23	40012577	PIPE HOLDER				1
24	SS4110615SP	SCREW 11/64-40 L=6				1
25	22619803	VILENE HOLDER				1
26	SS4110715SP	SCREW 11/64-40 L=7				1
27	22619605	VILENE				1
28	22619001	SUCTION				1
29	SS2110930SP	SCREW 11/64-40 L=8.7				1
30	B1851512000	FILTER SCREEN				1
31	B1850512000	BUSHING HOLDER				1
32	SS7090910SP	SCREW 9/64-40 L= 8.5				1
33	NS6090310SP	NUT 9/64-40				1
34	10623403	BASE				1
35	SS6111610SP	SCREW 11/64-40 L=16				2
36	B1834512000A	OIL ADJUSTING SCREW				1
37	NS6110310SP	NUT 11/64-40				1
38	23630007	TUBE				0.12
39	SQ1150451MZ	CONNECTING SCREW				1
40	SQ1110401MZ	CONNECTING SCREW	FOR LH-3128-7			1
41	23630007	TUBE				0.02
42	23630007	TUBE				0.08
43	23630007	TUBE				0.09
44	13765607	OIL CONNEC. ARM				3
45	23630007	TUBE				0.51
46	23630007	TUBE				0.4
47	23630007	TUBE				0.05

jintex.in

LUBRICATION COMPONENTS

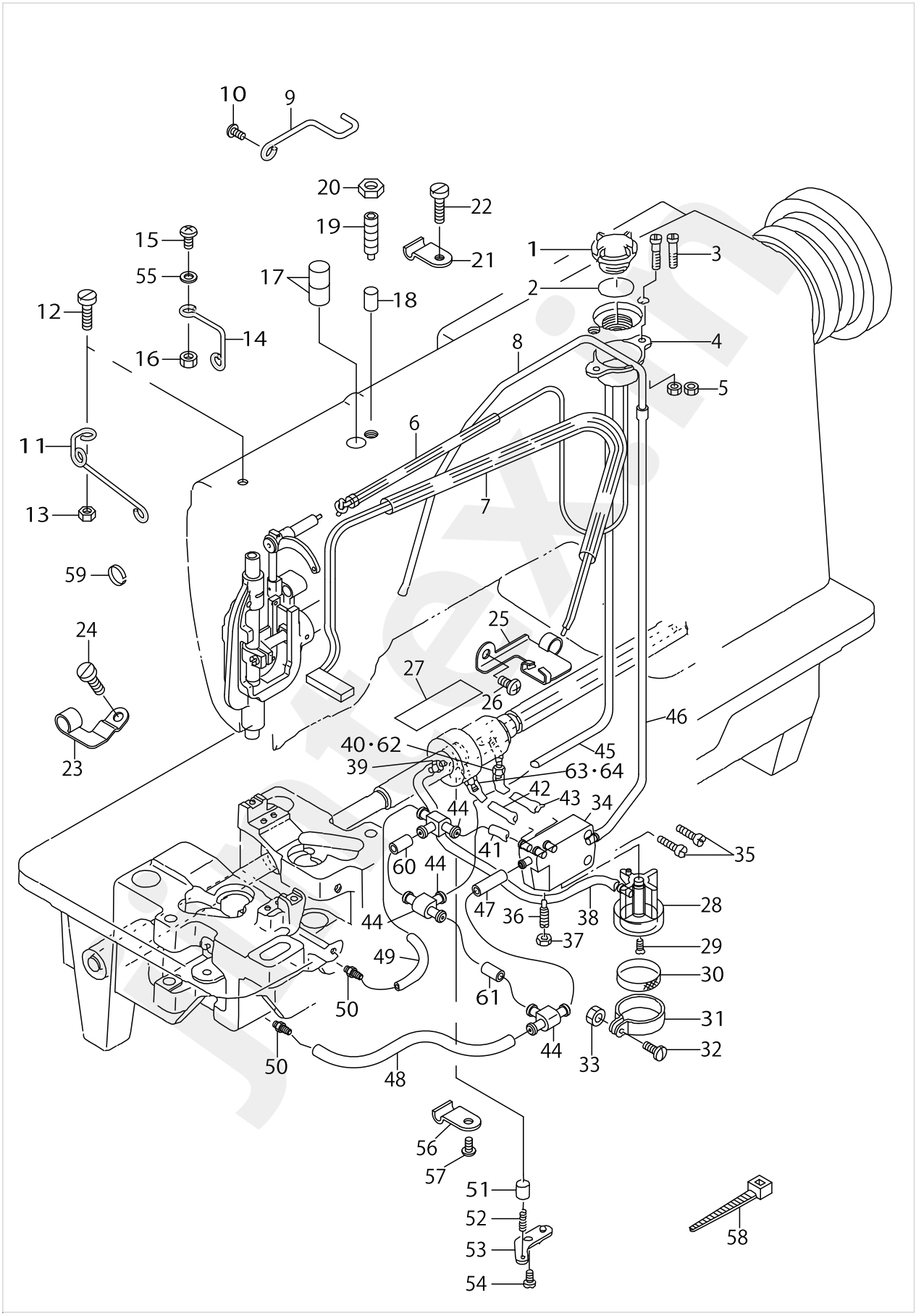

jintex.in

LUBRICATION COMPONENTS

No.	Parts No.	Parts name	Remarks	Level	Cons	Qty
48	23630007	TUBE				0.21
49	23630007	TUBE				0.15
50	SQ1110401MZ	CONNECTING SCREW				2
51	B3534155000	PLUNGER				1
52	B1214038000	PLUNGER SPRING				1
53	B3524552000	PLUNGER THRUST PLATE				1
54	SS4110815SP	SCREW 11/64-40 L=8				1
55	B3534012000	GASKET				1
56	B3538112000	OIL RETURN TUBE HOLDER				1
57	SS4110815SP	SCREW 11/64-40 L=8				1
58	EA9500B0100	CABLE BAND				3
59	B1414512000	OIL WICK RETAINER				1
60	23630007	TUBE				0.01
61	23630007	TUBE				0.01
62	22619704	OILING JOINT	FOR LH-3128			1
63	22619704	OILING JOINT	FOR LH-3128-7			1
64	SQ1110401MZ	CONNECTING SCREW	FOR LH-3128			1

jintex.in

jintex.in

BELT COVER & BOBBIN WINDER COMPONENTS

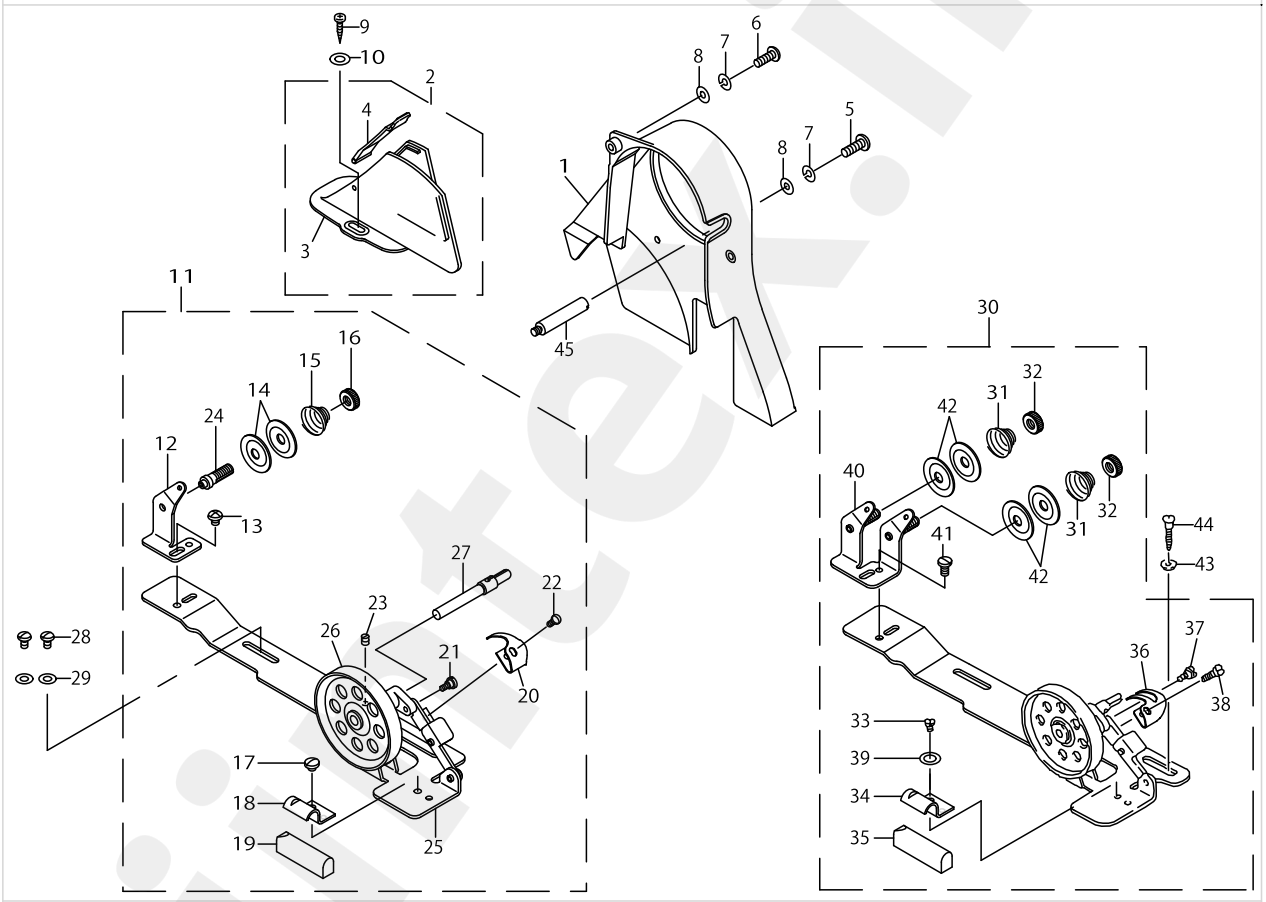

BELT COVER & BOBBIN WINDER COMPONENTS

No.	Parts No.	Parts name	Remarks	Level	Cons	Qty
1	22603401	BELT COVER A ASM.				1
2	11076858	BELT COVER B COMPL.				1
3	11076809	BELT COVER B		*		1
4	11076957	BELT COVER B CAP ASM.		*		1
5	SS4111215SP	SCREW 11/64-40 L=12				2
6	SS6121610TP	SCREW 3/16-28 L=15.5				1
7	WS0451040KP	SPRING WASHER 4.5X8.5X1				3
8	WP0501016SD	WASHER 5X10.5X1				3
9	SK3412000SC	WOOD SCREW D=4.1 L=20				2
10	WP0501016SC	WASHER 5X10.5X1				2
11	22927354	BOBBIN WINDER COMPL.				1
12	22928501	THREAD TENSION POST BASE		*		1
13	SS4110515SP	SCREW 11/64-40 L=5		*		1
14	22928907	THREAD TENSION DISK		*		2
15	22929004	THREAD TENSION SPRING		*		1
16	22928808	NUT		*		1
17	SS7110350SP	SCREW 11/64-40 L=3.5		*		1
18	22928402	CONTROL RUBBER HOLDING PLATE		*		1
19	22928303	CONTROL RUBBER		*		1
20	22928105	BOBBIN PRESSER		*		1
21	SD0490261SP	HINGE SCREW D=4.9 H=2.6		*		1
22	SS7081310SP	SCREW 1/8-44 L=12.5		*		1
23	SS8110510SP	SCREW 11/64-40 L=5		*		1
24	22928709	THREAD TENSION POST		*		1
25	22927305	BOBBIN WINDER BASE		*		1
26	22927404	BOBBIN WINDER		*		1
27	22927602	BOBBIN WINDER SPINDLE		*		1
28	WP0501016SC	WASHER 5X10.5X1				2
29	SK3482500SC	WOOD SCREW D=4.8 L=25				2
30	22621155	THREAD WINDER COMPL.	FOR JE			1
31	22929004	THREAD TENSION SPRING		*		2
32	22928808	NUT		*		2
33	SS4110515SP	SCREW 11/64-40 L=5		*		1
34	22928402	CONTROL RUBBER HOLDING PLATE		*		1
35	22928303	CONTROL RUBBER		*		1
36	22621106	BOBBIN PRESSER		*		1
37	SD0490261SP	HINGE SCREW D=4.9 H=2.6		*		1
38	SS7081310SP	SCREW 1/8-44 L=12.5		*		1
39	WP0480856SP	WASHER 4.8X8.4X0.8		*		1
40	22621056	TENSION BAR BASE COMPL.		*		1
41	SS7110840SP	SCREW 11/64-40 L=7.8		*		1
42	22928907	THREAD TENSION DISK		*		4
43	WP0501016SC	WASHER 5X10.5X1				2
44	SK3482500SC	WOOD SCREW D=4.8 L=25				2
45	B8233555000	BELT COVER SUPPORT STUD				2

jintex.in

OIL RESERVOI & KNEE LIFTER COMPONENTS

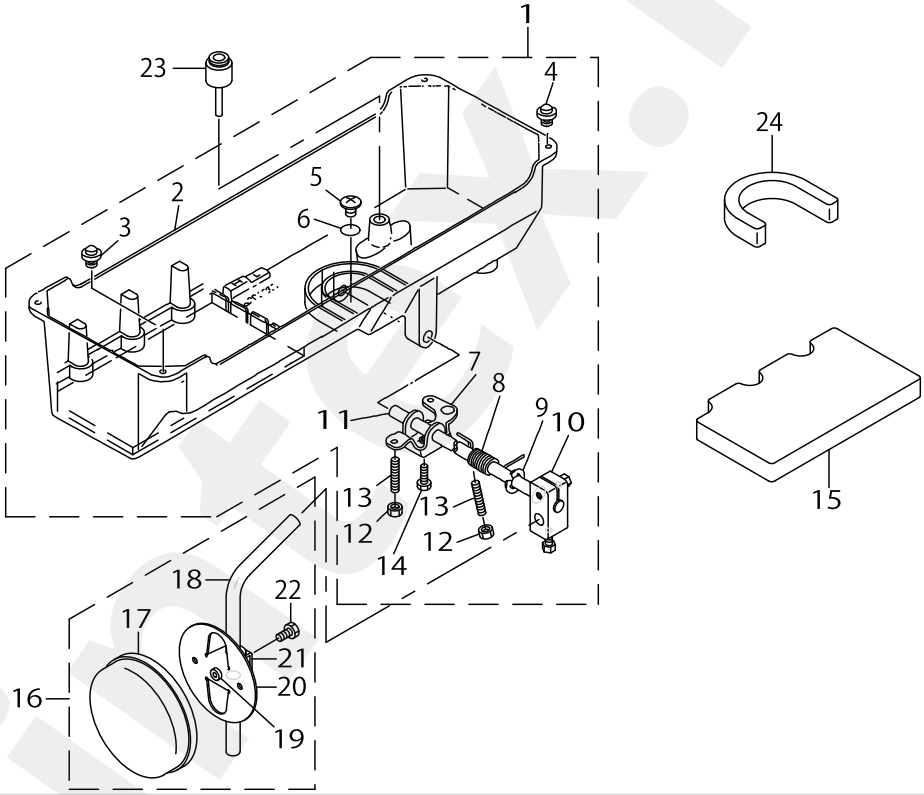

OIL RESERVOI & KNEE LIFTER COMPONENTS

No.	Parts No.	Parts name	Remarks	Level	Cons	Qty
1	10162253	OIL RESERVOIR ASM.				1
2	10162204	OIL RESERVOIR		*		1
3	10162600	RUBBER CUSHION		*		2
4	11047107	RUBBER CUSHION		*		2
5	SM0081001SD	SCREW		*		1
6	RO098240100	RUBBER RING		*		1
7	11024015	CONNECTING ROT, VERTICAL		*		1
8	11024106	SPRING		*		1
9	RE1000000K0	E-RING 10		*		1
10	22932453	BRACKET ASM.		*		1
11	11024205	KNEE PRESS ROD		*		1
12	NM6060001SE	NUT M6		*		2
13	SM8063012TR	SCREW M6 L=30		*		2
14	SM9061853SR	SCREW M6 L=17.5		*		1
15	22622104	OIL RESERVOIR SPACER, B				1
16	22934251	KNEE PAD PLATE ASM.				1
17	22934509	KNEE PAD PLATE COVER		*		1
18	22934608	KNEE PAD UPRIGHT SHAFT		*		1
19	22934400	KNEE PAD PLATE RUBBER		*		1
20	22934202	KNEE PAD PLATE		*		1
21	22934301	KNEE PAD PLATE SUPPORT		*		1
22	SM9061203SE	SCREW M6 L=12		*		1
23	11024304	KNEE PRESS LIFTER ROD				1
24	22622005	OIL RESERVOIR SPACER, A				1

jintex.in

jintex.in

THREAD STAND COMPONENTS (1) (FOR USE IN JAPAN)

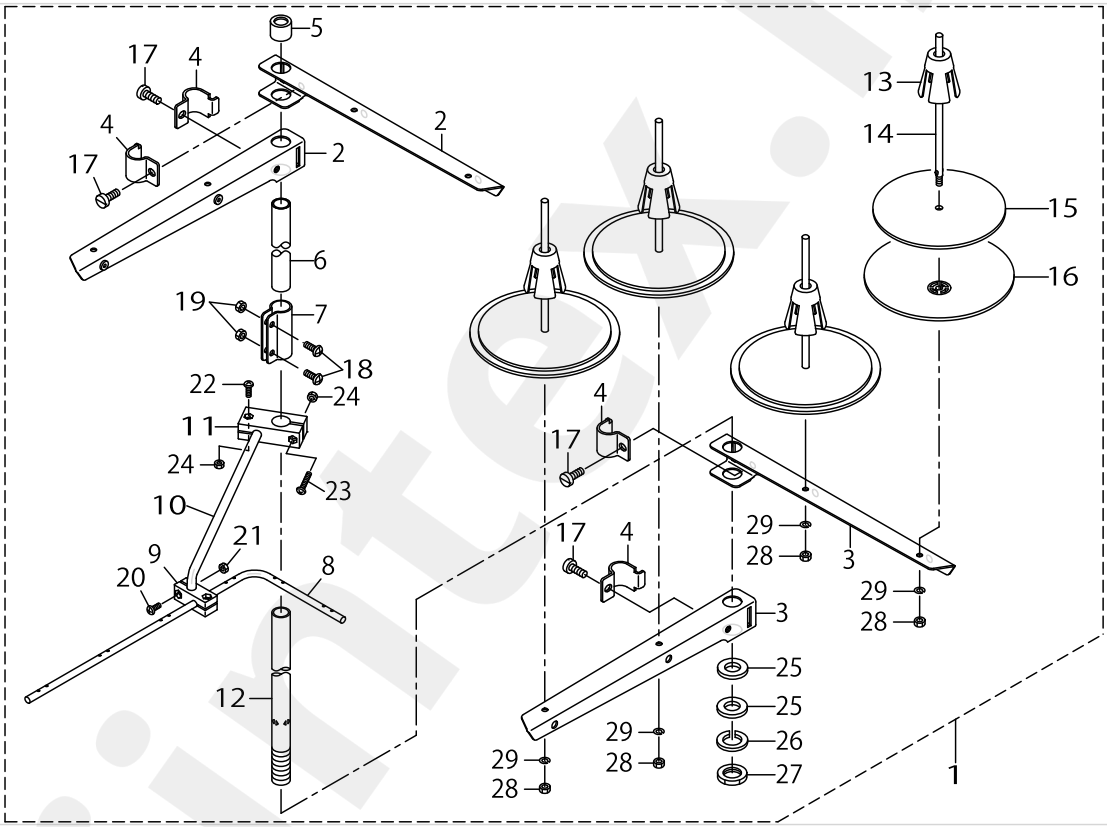

THREAD STAND COMPONENTS (1) (FOR USE IN JAPAN)

No.	Parts No.	Parts name	Remarks	Level	Cons	Qty
1	13167556	THREAD STANDING DEVICE ASM.				1
2	22930556	SPOOL REST ARM ASM.		*		2
3	22930507	SPOOL REST ARM		*		2
4	22930705	THREAD GUIDE ARM JOINT		*		4
5	22931406	THREAD STANDING ROD RUBBER CAP		*		1
6	22930408	THREAD STANDING ROD, UPPER		*		1
7	22931307	THREAD STANDING ROD JOINT		*		1
8	13167903	THREAD STANDING THREAD GUIDE		*		1
9	13168000	THREAD STANDING GUIDE BASE		*		1
10	13168109	THREAD STANDING GUIDE ARM		*		1
11	13168208	THREAD STANDING GUIDE ARM BASE		*		1
12	22930309	THREAD STANDING ROD, LOWER		*		1
13	22931109	SPOOL RETAINER		*		4
14	22931000	SPOOL PIN		*		4
15	22930903	SPOOL REST CUSHION		*		4
16	22930804	SPOOL REST		*		4
17	SM6061610SC	SCREW M6 L=16		*		4
18	SM4051405SE	SCREW M5 L=14		*		2
19	NM6050001SE	NUT M5		*		2
20	SM4041001SC	SCREW M4X0.7 L=10		*		2
21	NM6040002SE	NUT M4X0.7		*		2
22	SM4041201SC	SCREW M4 L=12		*		1
23	SM4042001SC	SCREW M4 X 20		*		1
24	NM6040002SE	NUT M4X0.7		*		2
25	WP1612616SE	WASHER 16X30X2.6		*		2
26	WS1643202KR	SPRING WASHER		*		1
27	NM6160511SE	NUT M16X1.5		*		1
28	NM6050001SE	NUT M5		*		4
29	WS0510002KN	SPRING WASHER		*		4

jintex.in

jintex.in

THREAD STAND COMPONENTS (2) (EXCEPT USE IN JAPAN)

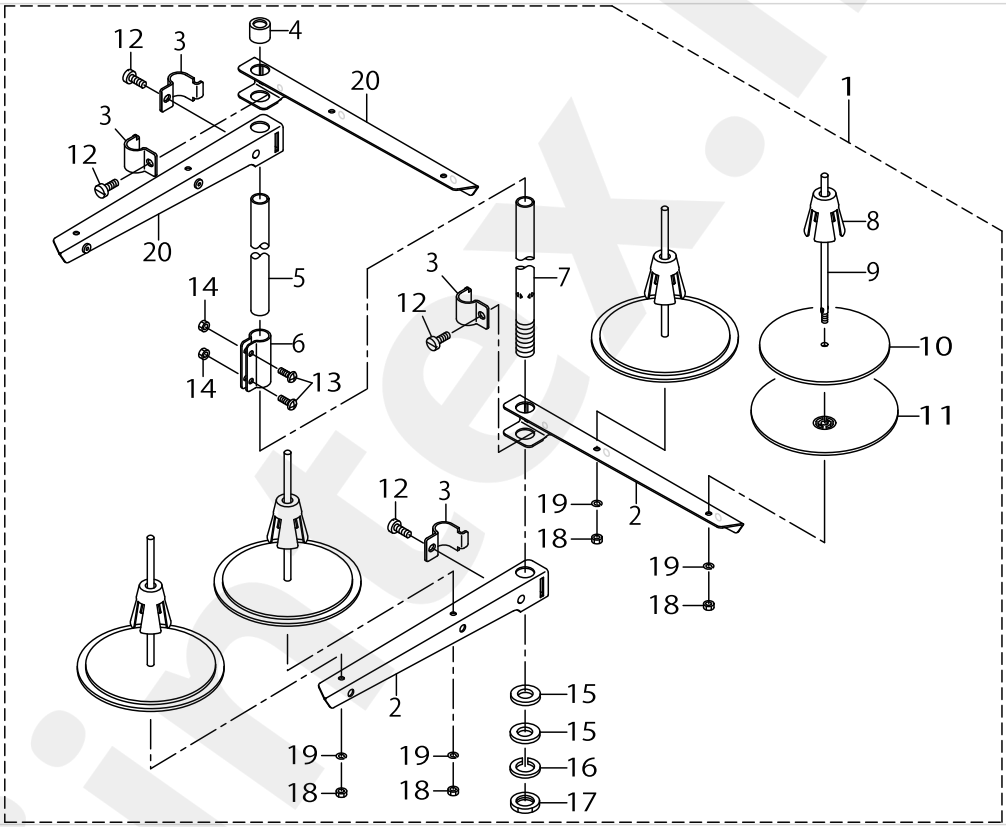

jintex.in

jintex.in

THREAD STAND COMPONENTS (2) (EXCEPT USE IN JAPAN)

No.	Parts No.	Parts name	Remarks	Level	Cons	Qty
1	26910158	THREAD STANDING DEVICE ASM.				1
2	22930507	SPOOL REST ARM		*		2
3	22930705	THREAD GUIDE ARM JOINT		*		4
4	22931406	SPOOL REST ROD RUBBER CAP		*		1
5	22930408	SPOOL REST ROD, UPPER		*		1
6	22931307	SPOOL REST ROD JOINT		*		1
7	22930309	SPOOL REST ROD, LOWER		*		1
8	22931109	SPOOL RETAINER		*		4
9	22931000	SPOOL PIN		*		4
10	22930903	SPOOL REST CUSHION		*		4
11	22930804	SPOOL REST		*		4
12	SM6061610SC	SCREW M6 L=16		*		4
13	SM4051405SE	SCREW M5 L=14		*		2
14	NM6050001SE	NUT M5		*		2
15	WP1612616SE	WASHER 16X30X2.6		*		2
16	WS1643202KR	SPRING WASHER		*		1
17	NM6160511SE	NUT M16X1.5		*		1
18	NM6050001SE	NUT M5		*		4
19	WS0510002KN	SPRING WASHER		*		4
20	22930556	THREAD STANDING ARM ASM.		*		2

jintex.in

jintex.in

LH-3128-7 EXCLUSIVE PARTS FOR BOBBIN THREAD CLAMPLESS TYPE

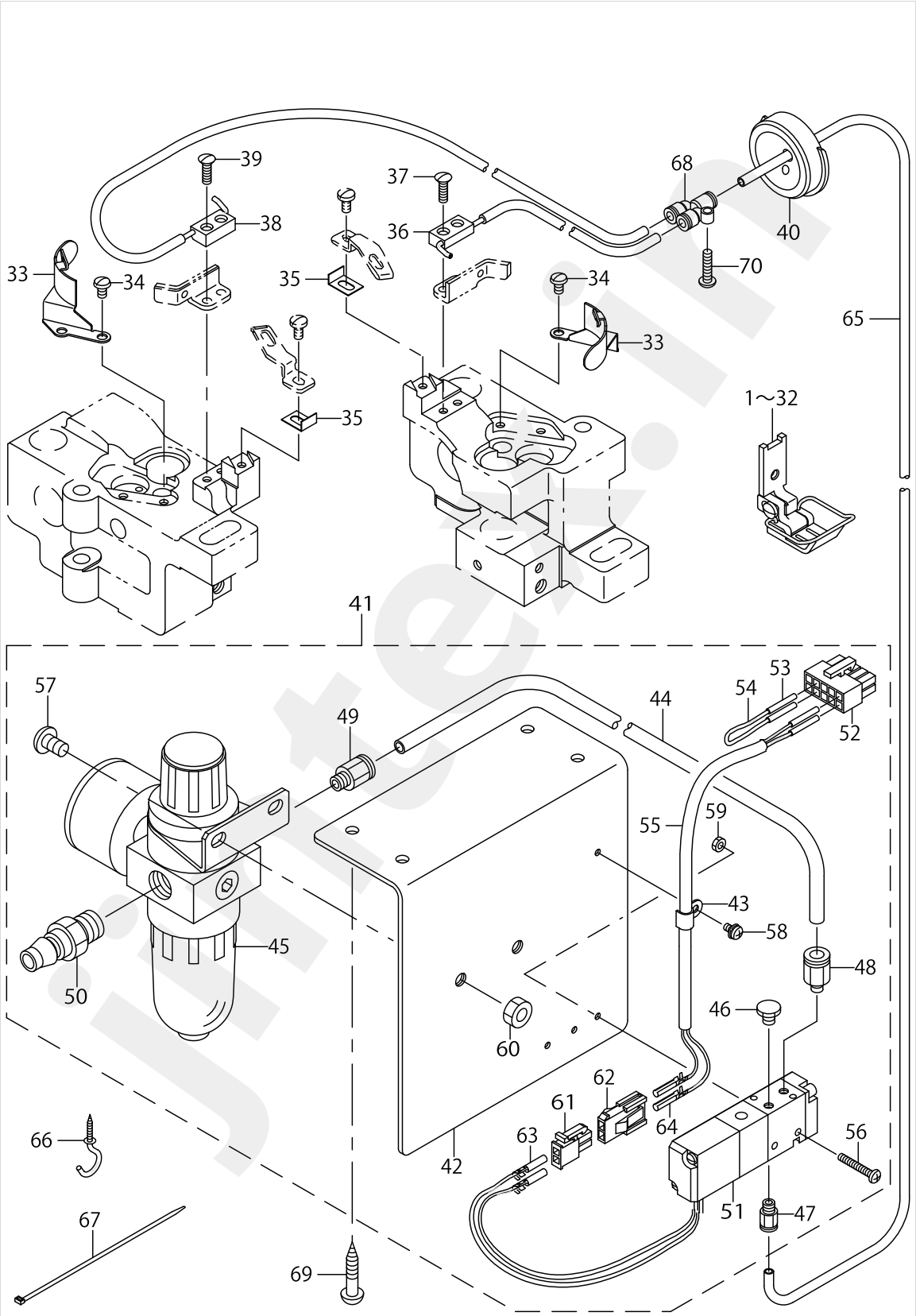

jintex.in

LH-3128-7 EXCLUSIVE PARTS FOR BOBBIN THREAD CLAMPLESS TYPE

No.	Parts No.	Parts name	Remarks	Level	Cons	Qty
1	22673859	SLIDE PRESSER FOOT ASM.1/4	TYPE S			1
2	22673552	SLIDE PRESSER FOOT ASM.5/32	TYPE S			1
3	22673651	SLIDE PRESSER FOOT ASM.3/16	TYPE S			1
4	22673750	SLIDE PRESSER FOOT ASM.7/32	TYPE S			1
5	22673958	SLIDE PRESSER FOOT ASM.9/32	TYPE S			1
6	22674055	SLIDE PRESSER FOOT ASM.5/16	TYPE S			1
7	22674154	SLIDE PRESSER FOOT ASM.3/8	TYPE S			1
8	22674253	SLIDE PRESSER FOOT ASM.7/16	TYPE S			1
9	22674352	SLIDE PRESSER FOOT ASM.1/2	TYPE S			1
10	22674451	SLIDE PRESSER FOOT ASM.5/8	TYPE S			1
11	22674550	SLIDE PRESSER FOOT ASM.3/4	TYPE S			1
12	22674659	SLIDE PRESSER FOOT ASM.7/8	TYPE S			1
13	22674758	SLIDE PRESSER FOOT ASM.1	TYPE S			1
14	22674857	SLIDE PRESSER FOOT ASM.1.1/8	TYPE S			1
15	22674956	SLIDE PRESSER FOOT ASM.1.1/4	TYPE S			1
16	22671853	SLIDE PRESSER FOOT ASM.3/32	TYPE A			1
17	22671952	SLIDE PRESSER FOOT ASM.1/8	TYPE A			1
18	22672059	SLIDE PRESSER FOOT ASM.5/32	TYPE A			1
19	22672158	SLIDE PRESSER FOOT ASM.3/16	TYPE A			1
20	22672257	SLIDE PRESSER FOOT ASM.7/32	TYPE A			1
21	22672356	SLIDE PRESSER FOOT ASM.1/4	TYPE A			1
22	22672455	SLIDE PRESSER FOOT ASM.9/32	TYPE A			1
23	22672554	SLIDE PRESSER FOOT ASM.5/16	TYPE A			1
24	22672653	SLIDE PRESSER FOOT ASM.3/8	TYPE A			1
25	22672752	SLIDE PRESSER FOOT ASM.7/16	TYPE A			1
26	22672851	SLIDE PRESSER FOOT ASM.1/2	TYPE A			1
27	22672950	SLIDE PRESSER FOOT ASM.5/8	TYPE A			1
28	22673057	SLIDE PRESSER FOOT ASM.3/4	TYPE A			1
29	22673156	SLIDE PRESSER FOOT ASM.7/8	TYPE A			1
30	22673255	SLIDE PRESSER FOOT ASM.1	TYPE A			1
31	22673354	SLIDE PRESSER FOOT ASM.1.1/8	TYPE A			1
32	22673453	SLIDE PRESSER FOOT ASM.1.1/4	TYPE A			1
33	22675706	RECTIFICATION PLATE				2
34	SS5090610SP	SCREW 9/64-40 L=6				4
35	22675904	COUNTER KNIFE SPACER				2
36	22675656	AIR NOZZLE ASM.,RIGHT				1
37	SS2091210SP	SCREW 9/64-40 L=12.3				2
38	22675557	AIR NOZZLE ASM.,LEFT				1
39	SS2091210SP	SCREW 9/64-40 L=12.3				2
40	22671101	RUBBER PLUG				1
41	22675854	SOLENOID VALVE MOUNT PLATE ASM				1
42	22675805	SOLENOID VALVE MOUNT PLATE		*		1
43	B3538112000	OIL RETURN TUBE HOLDER		*		1
44	BT0600401EB	TUBE		*		0.2
45	PF0552040A0	FILTER REGULATOR ASM.		*		1
46	PJ020500001	PLUG		*		1
47	PJ301040502	HALF UNION 4XM5		*		1

jintex.in

LH-3128-7 EXCLUSIVE PARTS FOR BOBBIN THREAD CLAMPLESS TYPE

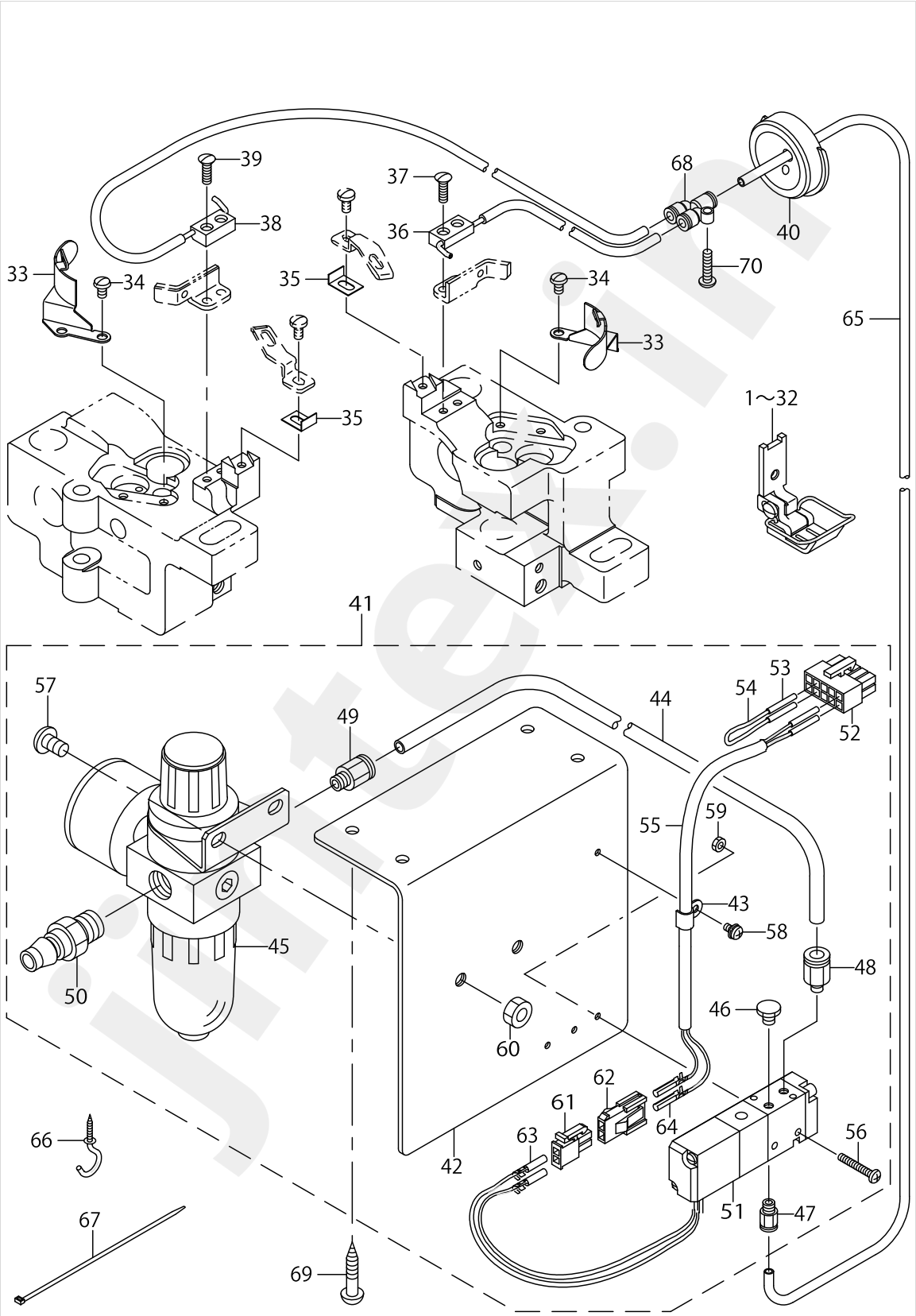

LH-3128-7 EXCLUSIVE PARTS FOR BOBBIN THREAD CLAMPLESS TYPE

No.	Parts No.	Parts name	Remarks	Level	Cons	Qty
48	PJ301060503	HALF UNION		*		1
49	PJ301065201	HALF UNION 6XPT1/4		*		1
50	PJ309005203	QUICK JOINT PLUG		*		1
51	PV130523000	MAGNETIC VALVE		*		1
52	HK034610100	10P CONNECTOR		*		1
53	HK03464000B	PIN CONTACT		*		4
54	HW100470990	VINYL COVERED WIRE		*		0.1
55	HW500140000	2-C CABLE		*		1
56	SM4032001SC	SCREW M3X0.5 L=20		*		2
57	SM4061001SB	SCREW M6 L=10		*		2
58	SL4030691SC	SCREW M3X6		*		1
59	NM6030001SB	NUT M3		*		2
60	NM6060001SB	NUT M6		*		2
61	HK034610020	2-POLE NYLON PLUG		*		1
62	HK034620020	2P PLUG		*		1
63	HK03464000B	PIN CONTACT		*		2
64	HK034630000	TERMINAL		*		2
65	BT0400201EB	TUBE4X2				1.3
66	D2113555B00	CORD SET HOOK, B				2
67	EA9500B0100	CABLE BAND				4
68	PJ308040002	QUICK COUPLING				1
69	SK3482500SC	WOOD SCREW D=4.8 L=25				4
70	SS4091520SP	SCREW 9/64-40 L=15				1

jintex.in

jintex.in

(糸切なし) (Without thread trimmer)

Needle gauge size 針 幅			Throat plate 針 板		Feed Dog 送 り 歯					
Code コード	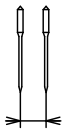		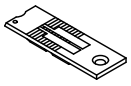		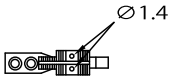		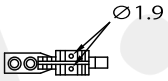		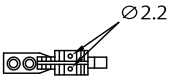	
	inch	mm	Ref.No.	Part No.	Ref.No.	Part No.	Ref.No.	Part No.	Ref.No.	Part No.
A	3/32	2.4	1	226-25008	20	226-35007				
B	1/8	3.2	2	226-25107	21	226-30107				
C	5/32	4.4	3	226-25206	22	226-35205	39	226-30206		
D	3/16	4.8	4	226-25305	23	226-35304	40	226-30404	56	B1613-512-D0H
E	7/32	5.6	5	226-25404	24	226-35403	41	226-30503	57	B1613-512-E0H
F	1/4	6.4	6	226-25503	25	226-35502	42	226-30602	58	B1613-512-F0H
G	9/32	7.1	7	226-25602	26	226-35700	43	226-30800	59	B1613-512-G0H
H	5/16	7.9	8	226-25701	27	226-35809	44	226-30909	60	B1613-512-H0H
K	3/8	9.5	9	226-25800	28	226-35908	45	226-31006	61	B1613-512-K0H
W	7/16	11.1	10	226-25909	29	226-36005	46	226-31105		✳
L	1/2	12.7	11	226-26006	30	226-36203	47	226-31303	62	B1613-512-L0H
M	5/8	15.9	12	226-26105	31	226-36302	48	226-31402	63	B1613-512-M0H
N	3/4	19.1	13	226-26204	32	226-36401	49	226-31501	64	B1613-512-N0H
P	7/8	22.2	14	226-26303	33	226-36609	50	226-31709	65	B1613-512-P0H
Q	1	25.4	15	226-26402	34	226-36708	51	226-31808	66	B1613-512-Q0H
R	1 1/8	28.6	16	226-26501	35	226-36807	52	226-31907	67	B1613-512-R0H
S	1 1/4	31.8	17	226-26600	36	226-36906	53	226-32004	68	B1613-512-S0H
T	1 3/8	34.9	18	226-26709	37	226-37003	54	226-32103	69	B1613-512-T0H
U	1 1/2	38.1	19	226-26808	38	226-37102	55	226-32202	70	B1613-512-U0H
Stitch spec. 縫 仕 様		S	Spec. common 仕様共通					★		
		A				★				
		G								★

★ Standard spec. 標準仕様
☆ Substandard spec. 準標準仕様
✳ Special order 特別注文

jintex.in

TABLE OF EXCHANGING GAUGE PARTS (1)

No.	Parts No.	Parts name	Remarks	Level	Cons	Qty
1	22625008	THROAT PLATE 3/32″ (2.4MM)				1
2	22625107	THROAT PLATE 1/8″ (3.2MM)				1
3	22625206	THROAT PLATE 5/32″ (4MM)				1
4	22625305	THROAT PLATE 3/16″ (4.8MM)				1
5	22625404	THROAT PLATE 7/32″ (5.6MM)				1
6	22625503	THROAT PLATE 1/4				1
7	22625602	THROAT PLATE 9/32″ (7.1MM)				1
8	22625701	THROAT PLATE 5/16″ (7.9MM)				1
9	22625800	THROAT PLATE 3/8″ (9.5MM)				1
10	22625909	THROT PLATE 7/16 (11.1M)				1
11	22626006	THROAT PLATE 1/2″ (12.7MM)				1
12	22626105	THROAT PLATE 5/8″ (15.9MM)				1
13	22626204	THROAT PLATE 3/4″ (19.1MM)				1
14	22626303	THROAT PLATE 7/8″ (22.2MM)				1
15	22626402	THROAT PLATE 1″ (25.4MM)				1
16	22626501	THROAT PLATE 1.1/8″ (28.6MM)				1
17	22626600	THROAT PLATE 1.1/4″ (31.8MM)				1
18	22626709	THROAT PLATE 1.3/8″ (34.9MM)				1
19	22626808	THROAT PLATE 1.1/2″ (38.1MM)				1
20	22635007	FEED DOG 3/32″ (2.4MM)				1
21	22630107	FEED DOG 1/8″ (3.2MM)				1
22	22635205	FEED DOG 5/32″ (4.0MM)				1
23	22635304	FEED DOG 3/16″ (4.8MM)				1
24	22635403	FEED DOG 7/32″ (5.6MM)				1
25	22635502	FEED DOG 1/4″ (6.4MM)				1
26	22635700	FEED DOG 9/32″ (7.1MM)				1
27	22635809	FEED DOG 5/16″ (7.9MM)				1
28	22635908	FEED DOG 3/8″ (9.5MM)				1
29	22636005	FEED DOG 7/16″ (11.1MM)				1
30	22636203	FEED DOG 1/2″ (12.7MM)				1
31	22636302	FEED DOG 5/8″ (15.9MM)				1
32	22636401	FEED DOG 3/4″ (19.1MM)				1
33	22636609	FEED DOG 7/8				1
34	22636708	FEED DOG 1″ (25.4MM)				1
35	22636807	FEED DOG 1.1/8″ (28.6MM)				1
36	22636906	FEED DOG 1.1/4″ (34.9MM)				1
37	22637003	FEED DOG 1.3/8″ (34.9MM)				1
38	22637102	FEED DOG 1.1/2″ (38.1MM)				1
39	22630206	FEED DOG 5/32″ (4.0MM)				1
40	22630404	FEED DOG 3/16″ (4.8MM)				1
41	22630503	FEED DOG 7/32″ (5.6MM)				1
42	22630602	FEED DOG 1/4				1
43	22630800	FEED DOG 9/32″ (7.1MM)				1
44	22630909	FEED DOG 5/16″ (7.9MM)				1
45	22631006	FEED DOG 3/8″ (9.5MM)				1
46	22631105	FEED DOG 7/16″ (11.1MM)				1
47	22631303	FEED DOG 1/2″ (12.7MM)				1

jintex.in

(糸切なし) (Without thread trimmer)

Needle gauge size 針幅			Throat plate 針板		Feed Dog 送り歯					
Code コード	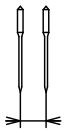		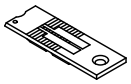		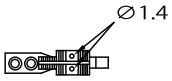		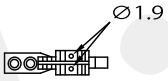		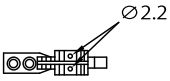	
	inch	mm	Ref.No.	Part No.	Ref.No.	Part No.	Ref.No.	Part No.	Ref.No.	Part No.
A	3/32	2.4	1	226-25008	20	226-35007				
B	1/8	3.2	2	226-25107	21	226-30107				
C	5/32	4.4	3	226-25206	22	226-35205	39	226-30206		
D	3/16	4.8	4	226-25305	23	226-35304	40	226-30404	56	B1613-512-D0H
E	7/32	5.6	5	226-25404	24	226-35403	41	226-30503	57	B1613-512-E0H
F	1/4	6.4	6	226-25503	25	226-35502	42	226-30602	58	B1613-512-F0H
G	9/32	7.1	7	226-25602	26	226-35700	43	226-30800	59	B1613-512-G0H
H	5/16	7.9	8	226-25701	27	226-35809	44	226-30909	60	B1613-512-H0H
K	3/8	9.5	9	226-25800	28	226-35908	45	226-31006	61	B1613-512-K0H
W	7/16	11.1	10	226-25909	29	226-36005	46	226-31105		✳
L	1/2	12.7	11	226-26006	30	226-36203	47	226-31303	62	B1613-512-L0H
M	5/8	15.9	12	226-26105	31	226-36302	48	226-31402	63	B1613-512-M0H
N	3/4	19.1	13	226-26204	32	226-36401	49	226-31501	64	B1613-512-N0H
P	7/8	22.2	14	226-26303	33	226-36609	50	226-31709	65	B1613-512-P0H
Q	1	25.4	15	226-26402	34	226-36708	51	226-31808	66	B1613-512-Q0H
R	1 1/8	28.6	16	226-26501	35	226-36807	52	226-31907	67	B1613-512-R0H
S	1 1/4	31.8	17	226-26600	36	226-36906	53	226-32004	68	B1613-512-S0H
T	1 3/8	34.9	18	226-26709	37	226-37003	54	226-32103	69	B1613-512-T0H
U	1 1/2	38.1	19	226-26808	38	226-37102	55	226-32202	70	B1613-512-U0H
Stitch spec. 縫仕様		S	Spec. common 仕様共通					★		
		A				★				
		G								★

★ Standard spec. 標準仕様
☆ Substandard spec. 準標準仕様
✳ Special order 特別注文

jintex.in

TABLE OF EXCHANGING GAUGE PARTS (1)

No.	Parts No.	Parts name	Remarks	Level	Cons	Qty
48	22631402	FEED DOG 5/8″ (15.9MM)				1
49	22631501	FEED DOG 3/4″ (19.1MM)				1
50	22631709	FEED DOG 7/8″ (2.2MM)				1
51	22631808	FEED DOG 1″ (25.4MM)				1
52	22631907	FEED DOG 1.1/8″ (28.6MM)				1
53	22632004	FEED DOG 1.1/4″ (31.4MM)				1
54	22632103	FEED DOG 1.3/8″ (34.9MM)				1
55	22632202	FEED DOG 1.1/2″ (38.1MM)				1
56	B1613512D0H	FEED DOG 3/16				1
57	B1613512E0H	FEED DOG 7/32				1
58	B1613512F0H	FEED DOG 1/4				1
59	B1613512G0H	FEED DOG 9/32				1
60	B1613512H0H	FEED DOG 5/16				1
61	B1613512K0H	FEED DOG 3/8				1
62	B1613512L0H	FEED DOG 1/2				1
63	B1613512M0H	FEED DOG 5/8				1
64	B1613512N0H	FEED DOG 3/4				1
65	B1613512P0H	FEED DOG 7/8				1
66	B1613512Q0H	FEED DOG 1				1
67	B1613512R0H	FEED DOG 1-1/8				1
68	B1613512S0H	FEED DOG 1-1/4				1
69	B1613512T0H	FEED DOG 1-3/8				1
70	B1613512U0H	FEED DOG 1-1/2				1

jintex.in

jintex.in

(糸切なし) (Without thread trimmer)

Needle gauge size 針 幅			Presser Foot asm. 押 さ え(組)					
Code コード			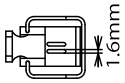		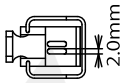		(Tip-divided) (移動式先割れ) 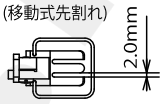	
	inch	mm	Ref.No.	Part No.	Ref.No.	Part No.	Ref.No.	Part No.
A	3/32	2.4	1	226-37557				
B	1/8	3.2	2	226-37656				
C	5/32	4.4	3	226-37755	20	101-52650		
D	3/16	4.8	4	226-37854	21	101-52759	37	226-40353
E	7/32	5.6	5	226-37953	22	101-52858	38	226-40452
F	1/4	6.4	6	226-38050	23	101-52957	39	226-40551
G	9/32	7.1	7	226-38258	24	101-53054	40	226-40759
H	5/16	7.9	8	226-38357	25	101-53153	41	226-40858
K	3/8	9.5	9	226-38456	26	101-53252	42	226-40957
W	7/16	11.1	10	226-38555	27	101-53351	43	226-41054
L	1/2	12.7	11	226-38753	28	101-53450	44	226-41252
M	5/8	15.9	12	226-38852	29	101-53559	45	226-41351
N	3/4	19.1	13	226-38951	30	101-53658	46	226-41450
P	7/8	22.2	14	226-39157	31	101-53757	47	226-41658
Q	1	25.4	15	226-39256	32	101-53856	48	226-41757
R	1 1/8	28.6	16	226-39355	33	101-53955	49	226-41856
S	1 1/4	31.8	17	226-39454	34	101-54052	50	226-41955
T	1 3/8	34.9	18	226-39553	35	101-54151	51	226-42052
U	1 1/2	38.1	19	226-39652	36	101-54250	52	226-42151
Stitch spec. 縫 仕 様		S			★		☆	
		A	★					
		G			☆		★	

★ Standard spec. 標準仕様
☆ Substandard spec. 準標準仕様

jintex.in

TABLE OF EXCHANGING GAUGE PARTS (2)

No.	Parts No.	Parts name	Remarks	Level	Cons	Qty
1	22637557	PRESSER FOOT ASM.3/32″(2.4MM)				1
2	22637656	PRESSER FOOT ASM.1/8″(3.2MM)				1
3	22637755	PRESSER FOOT ASM.5/32″(4.4MM)				1
4	22637854	PRESSER FOOT ASM.3/16″(4.8MM)				1
5	22637953	PRESSER FOOT ASM.7/32″(5.6MM)				1
6	22638050	PRESSER FOOT ASM.1/4″(6.4MM)				1
7	22638258	PRESSER FOOT ASM.9/32″(7.1MM)				1
8	22638357	PRESSER FOOT ASM.5/16″(7.9MM)				1
9	22638456	PRESSER FOOT ASM.3/8″(9.5MM)				1
10	22638555	PRESSER FOOT ASM.7/16″(11.1MM)				1
11	22638753	PRESSER FOOT ASM.1/2″(12.7MM)				1
12	22638852	PRESSER FOOT ASM.5/8″(15.9MM)				1
13	22638951	PRESSER FOOT ASM.3/4″(19.1MM)				1
14	22639157	PRESSER FOOT ASM.7/8″(22.2MM)				1
15	22639256	PRESSER FOOT ASM.1″(25.4MM)				1
16	22639355	PRESSER FOOT ASM.1.1/8″(28.6MM)				1
17	22639454	PRESSER FOOT ASM.1.1/4″(31.8MM)				1
18	22639553	PRESSER FOOT ASM.1.3/8″(34.9MM)				1
19	22639652	PRESSER FOOT ASM.1.1/2″(38.1MM)				1
20	10152650	PRESSER FOOT ASM. 5/32				1
21	10152759	PRESSER FOOT ASM. 3/16				1
22	10152858	PRESSER FOOT ASM. 7/32				1
23	10152957	PRESSER FOOT ASM. 1/4				1
24	10153054	PRESSER FOOT ASM. 9/32				1
25	10153153	PRESSER FOOT ASM. 5/16				1
26	10153252	PRESSER FOOT ASM. 3/8				1
27	10153351	PRESSER FOOT ASM. 7/16				1
28	10153450	PRESSER FOOT ASM. 1/2				1
29	10153559	PRESSER FOOT ASM. 5/8				1
30	10153658	PRESSER FOOT ASM. 3/4				1
31	10153757	PRESSER FOOT ASM. 7/8				1
32	10153856	PRESSER FOOT ASM. 1				1
33	10153955	PRESSER FOOT ASM. 1-1/8				1
34	10154052	PRESSER FOOT ASM. 1-1/4				1
35	10154151	PRESSER FOOT ASM. 1-3/8				1
36	10154250	PRESSER FOOT ASM. 1-1/2				1
37	22640353	PRESSER FOOT ASM.3/16″(4.8MM)				1
38	22640452	PRESSER FOOT ASM.7/32″(5.6MM)				1
39	22640551	PRESSER FOOT ASM.1/4″(6.4MM)				1
40	22640759	PRESSER FOOT ASM.9/32″(7.1MM)				1
41	22640858	PRESSER FOOT ASM.5/16″(7.9MM)				1
42	22640957	PRESSER FOOT ASM.3/8″(9.5MM)				1
43	22641054	PRESSER FOOT ASM.7/16″(11.1MM)				1
44	22641252	PRESSER FOOT ASM.1/2″(12.7MM)				1
45	22641351	PRESSER FOOT ASM.5/8″(15.9MM)				1
46	22641450	PRESSER FOOT ASM.3/4″(19.1MM)				1
47	22641658	PRESSER FOOT ASM.7/8″(22.2MM)				1

jintex.in

(糸切なし) (Without thread trimmer)

Needle gauge size 針 幅			Presser Foot asm. 押 さ え(組)					
Code コード			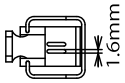		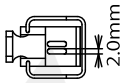		(Tip-divided) (移動式先割れ) 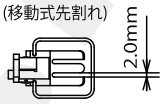	
	inch	mm	Ref.No.	Part No.	Ref.No.	Part No.	Ref.No.	Part No.
A	3/32	2.4	1	226-37557				
B	1/8	3.2	2	226-37656				
C	5/32	4.4	3	226-37755	20	101-52650		
D	3/16	4.8	4	226-37854	21	101-52759	37	226-40353
E	7/32	5.6	5	226-37953	22	101-52858	38	226-40452
F	1/4	6.4	6	226-38050	23	101-52957	39	226-40551
G	9/32	7.1	7	226-38258	24	101-53054	40	226-40759
H	5/16	7.9	8	226-38357	25	101-53153	41	226-40858
K	3/8	9.5	9	226-38456	26	101-53252	42	226-40957
W	7/16	11.1	10	226-38555	27	101-53351	43	226-41054
L	1/2	12.7	11	226-38753	28	101-53450	44	226-41252
M	5/8	15.9	12	226-38852	29	101-53559	45	226-41351
N	3/4	19.1	13	226-38951	30	101-53658	46	226-41450
P	7/8	22.2	14	226-39157	31	101-53757	47	226-41658
Q	1	25.4	15	226-39256	32	101-53856	48	226-41757
R	1 1/8	28.6	16	226-39355	33	101-53955	49	226-41856
S	1 1/4	31.8	17	226-39454	34	101-54052	50	226-41955
T	1 3/8	34.9	18	226-39553	35	101-54151	51	226-42052
U	1 1/2	38.1	19	226-39652	36	101-54250	52	226-42151
Stitch spec. 縫 仕 様		S			★		☆	
		A	★					
		G			☆		★	

★ Standard spec. 標準仕様
☆ Substandard spec. 準標準仕様

jintex.in

TABLE OF EXCHANGING GAUGE PARTS (2)

No.	Parts No.	Parts name	Remarks	Level	Cons	Qty
48	22641757	PRESSER FOOT ASM.1″(25.4MM)				1
49	22641856	PRESSER FOOT ASM.1.1/8″(28.6MM)				1
50	22641955	PRESSER FOOT ASM.1.1/4″(31.8MM)				1
51	22642052	PRESSER FOOT ASM.1.3/8″(34.9MM)				1
52	22642151	PRESSER FOOT ASM.1.1/2″(38.1MM)				1

jintex.in

jintex.in

(糸切付き) (With thread trimmer)

Needle gauge size 針 幅			Throat plate (with Thread Trimmer) 針板(糸切付)		Feed dog(with Thread Trimmer) 送 り 歯 (糸 切 付)						Needle clamp asm. 針 留(組)	
Code コード	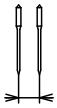				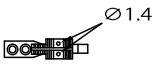		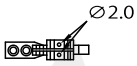		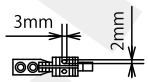		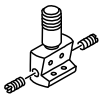	
	inch	mm	Ref.No.	Part No.	Ref.No.	Part No.	Ref.No.	Part No.	Ref.No.	Part No.	Ref.No.	Part No.
A	3/32	2.4	1	226-60104	18	226-65004					64	101-47551
B	1/8	3.2	2	226-60203	19	226-65103					65	101-47650
C	5/32	4.4	3	226-60302	20	226-65202	35	102-37907			66	101-47759
D	3/16	4.8	4	226-60401	21	226-65301	36	102-38004	50	102-39101	67	101-47858
E	7/32	5.6	5	226-60500	22	226-65400	37	102-38103	51	102-39200	68	101-47957
F	1/4	6.4	6	226-60609	23	226-65509	38	102-38202	52	102-39309	69	101-48054
G	9/32	7.1	7	226-60708	24	226-65707	39	102-38301	53	102-39408	70	101-48153
H	5/16	7.9	8	226-60807	25	226-65806	40	102-38400	54	102-39507	71	101-48252
K	3/8	9.5	9	226-60906	26	226-65905	41	102-38509	55	102-39606	72	101-48351
W	7/16	11.1	10	226-61003	27	226-66002	42	101-68300	56	101-70801	73	101-48450
L	1/2	12.7	11	226-61102	28	226-66200	43	102-38707	57	102-39804	74	101-48559
M	5/8	15.9	12	226-61201	29	226-66309	44	102-38806	58	102-39903	75	101-48658
N	3/4	19.1	13	226-61300	30	226-66408	45	102-38905	59	101-71106	76	101-48757
P	7/8	22.2	14	226-61409	31	226-66606	46	101-68706	60	101-71205	77	101-48856
Q	1	25.4	15	226-61508	32	226-66705	47	102-39002	61	101-71304	78	101-48955
R	1 1/8	28.6	16	226-61607	33	226-66804	48	101-68904	62	101-71403	79	101-49052
S	1 1/4	31.8	17	226-61706	34	226-66903	49	101-69001	63	101-71502	80	101-49151
T	1 3/8	34.9									81	101-49250
U	1 1/2	38.1									82	101-49359
Stitch spec. 縫 仕 様		S	Spec. common 仕様共通				★				Spec. common 仕様共通	
		A			★							
		G							★			

★ Standard spec. 標準仕様
☆ Substandard spec. 準標準仕様

jintex.in

TABLE OF EXCHANGING GAUGE PARTS (3)

No.	Parts No.	Parts name	Remarks	Level	Cons	Qty
1	22660104	THROAT PLATE 3/32				1
2	22660203	THROAT PLATE 1/8				1
3	22660302	THROAT PLATE 5/32				1
4	22660401	THROAT PLATE 3/16				1
5	22660500	THROAT PLATE 7/32				1
6	22660609	THROAT PLATE 1/4				1
7	22660708	THROAT PLATE 9/32				1
8	22660807	THROAT PLATE 5/16				1
9	22660906	THROAT PLATE 3/8				1
10	22661003	THROAT PLATE 7/16				1
11	22661102	THROAT PLATE 1/2				1
12	22661201	THROAT PLATE 5/8				1
13	22661300	THROAT PLATE 3/4				1
14	22661409	THROAT PLATE 7/8				1
15	22661508	THROAT PLATE 1				1
16	22661607	THROAT PLATE 1.1/8				1
17	22661706	THROAT PLATE 1.1/4				1
18	22665004	FEED DOG 3/32				1
19	22665103	FEED DOG 1/8				1
20	22665202	FEED DOG 5/32				1
21	22665301	FEED DOG 3/16				1
22	22665400	FEED DOG 7/32				1
23	22665509	FEED DOG 1/4				1
24	22665707	FEED DOG 9/32				1
25	22665806	FEED DOG 5/16				1
26	22665905	FEED DOG 3/8				1
27	22666002	FEED DOG 7/16				1
28	22666200	FEED DOG 1/2				1
29	22666309	FEED DOG 5/8				1
30	22666408	FEED DOG 3/4				1
31	22666606	FEED DOG 7/8				1
32	22666705	FEED DOG 1				1
33	22666804	FEED DOG 1·1/8				1
34	22666903	FEED DOG 1·1/4				1
35	10237907	FEED DOG 5/32				1
36	10238004	FEED DOG 3/16				1
37	10238103	FEED DOG 7/32				1
38	10238202	FEED DOG 1/4				1
39	10238301	FEED DOG 9/32				1
40	10238400	FEED DOG 5/16				1
41	10238509	FEED DOG 3/8				1
42	10168300	FEED DOG 7/16				1
43	10238707	FEED DOG 1/2				1
44	10238806	FEED DOG 5/8				1
45	10238905	FEED DOG 3/4				1
46	10168706	FEED DOG 7/8				1
47	10239002	FEED DOG 1				1

jintex.in

(糸切付き) (With thread trimmer)

Needle gauge size 針 幅			Throat plate (with Thread Trimmer) 針板(糸切付)		Feed dog(with Thread Trimmer) 送 り 歯 (糸 切 付)						Needle clamp asm. 針 留(組)	
Code コード	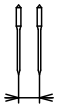				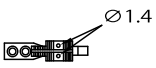		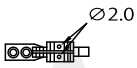		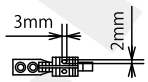		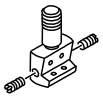	
	inch	mm	Ref.No.	Part No.	Ref.No.	Part No.	Ref.No.	Part No.	Ref.No.	Part No.	Ref.No.	Part No.
A	3/32	2.4	1	226-60104	18	226-65004					64	101-47551
B	1/8	3.2	2	226-60203	19	226-65103					65	101-47650
C	5/32	4.4	3	226-60302	20	226-65202	35	102-37907			66	101-47759
D	3/16	4.8	4	226-60401	21	226-65301	36	102-38004	50	102-39101	67	101-47858
E	7/32	5.6	5	226-60500	22	226-65400	37	102-38103	51	102-39200	68	101-47957
F	1/4	6.4	6	226-60609	23	226-65509	38	102-38202	52	102-39309	69	101-48054
G	9/32	7.1	7	226-60708	24	226-65707	39	102-38301	53	102-39408	70	101-48153
H	5/16	7.9	8	226-60807	25	226-65806	40	102-38400	54	102-39507	71	101-48252
K	3/8	9.5	9	226-60906	26	226-65905	41	102-38509	55	102-39606	72	101-48351
W	7/16	11.1	10	226-61003	27	226-66002	42	101-68300	56	101-70801	73	101-48450
L	1/2	12.7	11	226-61102	28	226-66200	43	102-38707	57	102-39804	74	101-48559
M	5/8	15.9	12	226-61201	29	226-66309	44	102-38806	58	102-39903	75	101-48658
N	3/4	19.1	13	226-61300	30	226-66408	45	102-38905	59	101-71106	76	101-48757
P	7/8	22.2	14	226-61409	31	226-66606	46	101-68706	60	101-71205	77	101-48856
Q	1	25.4	15	226-61508	32	226-66705	47	102-39002	61	101-71304	78	101-48955
R	1 1/8	28.6	16	226-61607	33	226-66804	48	101-68904	62	101-71403	79	101-49052
S	1 1/4	31.8	17	226-61706	34	226-66903	49	101-69001	63	101-71502	80	101-49151
T	1 3/8	34.9									81	101-49250
U	1 1/2	38.1									82	101-49359
Stitch spec. 縫 仕 様		S	Spec. common 仕様共通					★			Spec. common 仕様共通	
		A				★						
		G								★		

★ Standard spec. 標準仕様
☆ Substandard spec. 準標準仕様

jintex.in

TABLE OF EXCHANGING GAUGE PARTS (3)

No.	Parts No.	Parts name	Remarks	Level	Cons	Qty
48	10168904	FEED DOG 1-1/8				1
49	10169001	FEED DOG 1-1/4				1
50	10239101	FEED DOG 3/16				1
51	10239200	FEED DOG 7/32				1
52	10239309	FEED DOG 1/4				1
53	10239408	FEED DOG 9/32				1
54	10239507	FEED DOG 5/16				1
55	10239606	FEED DOG 3/8				1
56	10170801	FEED DOG 7/16				1
57	10239804	FEED DOG 1/2				1
58	10239903	FEED DOG 5/8				1
59	10171106	FEED DOG 3/4				1
60	10171205	FEED DOG 7/8				1
61	10171304	FEED DOG 1				1
62	10171403	FEED DOG 1-1/8				1
63	10171502	FEED DOG 1-1/4				1
64	10147551	NEEDLE CLAMP ASM. 3/32				1
65	10147650	NEEDLE CLAMP ASM. 1/8				1
66	10147759	NEEDLE CLAMP ASM. 5/32				1
67	10147858	NEEDLE CLAMP ASM. 3/16				1
68	10147957	NEEDLE CLAMP ASM. 7/32				1
69	10148054	NEEDLE CLAMP ASM. 1/4				1
70	10148153	NEEDLE CLAMP ASM. 9/32				1
71	10148252	NEEDLE CLAMP ASM. 5/16				1
72	10148351	NEEDLE CLAMP ASM. 3/8				1
73	10148450	NEEDLE CLAMP ASM. 7/16				1
74	10148559	NEEDLE CLAMP ASM. 1/2				1
75	10148658	NEEDLE CLAMP ASM. 5/8				1
76	10148757	NEEDLE CLAMP ASM. 3/4				1
77	10148856	NEEDLE CLAMP ASM. 7/8				1
78	10148955	NEEDLE CLAMP ASM. 1				1
79	10149052	NEEDLE CLAMP ASM. 1-1/8				1
80	10149151	NEEDLE CLAMP ASM. 1-1/4				1
81	10149250	NEEDLE CLAMP ASM. 1-3/8				1
82	10149359	NEEDLE CLAMP ASM. 1-1/2				1

jintex.in

(LH-3128F用) (For LH-3128F)

✳ Special order 特別注文

Needle gauge size 針幅			Throat plate for Taping テープ付用針板		Throat plate 針板		Feed Dog 送り歯		Presser Foot asm. 押さえ(組)		Swivel guide Presser asm. スイブルガイド押さえ(組)	
Code コード												
	inch	mm	Ref.No.	Part No.	Ref.No.	Part No.	Ref.No.	Part No.	Ref.No.	Part No.	Ref.No.	Part No.
B	1/8	3.2	1	226-28002	8	226-25107	15	226-34000	22	226-27152	29	226-47051
✳ C	5/32	4.4	2	226-28101	9	226-25206	16	226-34109	23	226-27251		————
D	3/16	4.8	3	226-28200	10	226-25305	17	226-34208	24	226-27350	30	226-47150
✳ E	7/32	5.6	4	226-28309	11	226-25404	18	226-34307	25	226-27459	31	226-47259
F	1/4	6.4	5	226-28408	12	226-25503	19	226-34406	26	226-27558	32	226-47358
G	9/32	7.1	6	226-28507	13	226-25602	20	226-34505	27	226-27657	33	226-47457
H	5/16	7.9	7	226-28606	14	226-25701	21	226-34604	28	226-27756	34	226-47556

Needle gauge size 針幅			Bed Slide asm. (with Tread Trimmer) 滑り板(組) (糸切り付)				Bed Slide asm. (with Tread Trimmer Stitch spec.F) 滑り板 (組) (糸切り無・F仕様)			
Code コード			Bed Slide asm. (Left) 糸切り滑り板(左)組		Bed Slide asm. (Right) 糸切り滑り板(右)組		Bed Slide asm. (Left) 滑り板(左)組		Bed Slide asm. (Right) 滑り板(右)組	
	inch	mm	Ref.No.	Part No.	Ref.No.	Part No.	Ref.No.	Part No.	Ref.No.	Part No.
A ~ W	3/32 ~ 7/16	2.4 ~ 11.4	35	226-50857	39	226-50352	43	226-01058	47	226-00555
L ~ N	1/2 ~ 3/4	12.7 ~ 19.1	36	226-50956	40	226-50451	44	226-01157	48	226-00654
P ~ Q	7/8 ~ 1	22.2 ~ 25.6	37	226-51053	41	226-50550	45	226-01256	49	226-00753
S ~ U	1 1/4 ~ 1 1/2	31.8 ~ 38.1	38	226-51152	42	226-50659	46	226-01355	50	226-00852

下軸メタル

Needle gauge size 針幅			Front metal 前メタル		Inner metal 中メタル	
Code コード						
	inch	mm	Ref.No.	Part No.	Ref.No.	Part No.
A ~ P	3/32 ~ 7/8	2.4 ~ 22.2	51	B1802-512-0A0-A	53	B1803-515-0A0
Q ~ U	1 ~ 1 1/2	25.4 ~ 38.1	52	B1802-512-0AB	54	101-12357

ワイパー

Needle gauge size 針幅			Wiper ワイパー	
Code コード				
	inch	mm	Ref.No.	Part No.
A ~ K	3/32 ~ 3/8	2.4 ~ 9.5	55	102-09203
W ~ M	7/16 ~ 5/8	11.1 ~ 15.9	56	102-09500
N ~ P	3/4 ~ 7/8	19.1 ~ 22.2	57	102-09807
Q ~ S	1 ~ 1 1/4	25.4 ~ 31.8	58	102-09906

jintex.in

TABLE OF EXCHANGING GAUGE PARTS (4)

No.	Parts No.	Parts name	Remarks	Level	Cons	Qty
1	22628002	THROAT PLATE 1/8				1
2	22628101	THROAT PLATE 5/32				1
3	22628200	THROAT PLATE 3/16				1
4	22628309	THROAT PLATE, 7/32				1
5	22628408	THROAT PLATE 1/4				1
6	22628507	THROAT PLATE 9/32				1
7	22628606	TAPING THROT PLATE 5/16				1
8	22625107	THROAT PLATE 1/8″ (3.2MM)				1
9	22625206	THROAT PLATE 5/32″ (4MM)				1
10	22625305	THROAT PLATE 3/16″ (4.8MM)				1
11	22625404	THROAT PLATE 7/32″ (5.6MM)				1
12	22625503	THROAT PLATE 1/4″ (6.4MM)				1
13	22625602	THROAT PLATE 9/32″ (7.1MM)				1
14	22625701	THROAT PLATE 5/16″ (7.9MM)				1
15	22634000	FEED DOG F 1/8				1
16	22634109	FEED DOG F 5/32				1
17	22634208	FEED DOG F 3/16				1
18	22634307	FEED DOG, 7/32				1
19	22634406	FEED DOG F 1/4				1
20	22634505	FEED DOG F 9/32				1
21	22634604	FEED DOG F 5/16				1
22	22627152	PRESSER FOOT F ASM. 1/8				1
23	22627251	PRESSER FOOT F ASM. 5/32				1
24	22627350	F PRESSER FOOT ASM. 3/16				1
25	22627459	PRESSER FOOT ASM., 7/32				1
26	22627558	PRESSER FOOT F ASM. 1/4				1
27	22627657	PRESSER FOOT ASM., F 9/32				1
28	22627756	PRESSER FOOT ASM., F 5/16				1
29	22647051	SWIVEL GUIDE PRESSER ASM. 1/8				1
30	22647150	GUIDE PRESSER ASM. 3/16				1
31	22647259	GUIDE PRESSER ASM. 7/32				1
32	22647358	GUIDE PRESSER ASM. 1/4				1
33	22647457	GUIDE PRESSER ASM. 9/32				1
34	22647556	SWIVEL GUIDE PRESSER ASM.5/16				1
35	22650857	BED SLIDE LEFT, ASM., A				1
36	22650956	LEFT SLIDER PLATE B ASM.				1
37	22651053	BED SLIDE LEFT, ASM., C				1
38	22651152	BED SLIDE LEFT, ASM., D				1
39	22650352	BED SLIDE RIGHT, ASM., A				1
40	22650451	RIGHT SLIDER PLATE B ASM.				1
41	22650550	BED SLIDE RIGHT, ASM., C				1
42	22650659	BED SLIDE RIGHT, ASM., D				1
43	22601058	BED SLIDE LEFT, ASM., A				1
44	22601157	LEFT SLIDER PLATE B ASM.				1
45	22601256	BED SLIDE LEFT, ASM., C				1
46	22601355	BED SLIDE LEFT, ASM., C				1
47	22600555	BED SLIDE RIGHT, ASM., A				1

jintex.in

(LH-3128F用) (For LH-3128F)

✳ Special order 特別注文

Needle gauge size 針幅			Throat plate for Taping テープ付用針板		Throat plate 針板		Feed Dog 送り歯		Presser Foot asm. 押さえ(組)		Swivel guide Presser asm. スイブルガイド押さえ(組)	
Code コード												
	inch	mm	Ref.No.	Part No.	Ref.No.	Part No.	Ref.No.	Part No.	Ref.No.	Part No.	Ref.No.	Part No.
B	1/8	3.2	1	226-28002	8	226-25107	15	226-34000	22	226-27152	29	226-47051
✳ C	5/32	4.4	2	226-28101	9	226-25206	16	226-34109	23	226-27251		————
D	3/16	4.8	3	226-28200	10	226-25305	17	226-34208	24	226-27350	30	226-47150
✳ E	7/32	5.6	4	226-28309	11	226-25404	18	226-34307	25	226-27459	31	226-47259
F	1/4	6.4	5	226-28408	12	226-25503	19	226-34406	26	226-27558	32	226-47358
G	9/32	7.1	6	226-28507	13	226-25602	20	226-34505	27	226-27657	33	226-47457
H	5/16	7.9	7	226-28606	14	226-25701	21	226-34604	28	226-27756	34	226-47556

Needle gauge size 針幅			Bed Slide asm. (with Tread Trimmer) 滑り板(組) (糸切り付)				Bed Slide asm. (with Tread Trimmer Stitch spec.F) 滑り板 (組) (糸切り無・F仕様)			
Code コード			Bed Slide asm. (Left) 糸切り滑り板(左)組		Bed Slide asm. (Right) 糸切り滑り板(右)組		Bed Slide asm. (Left) 滑り板(左)組		Bed Slide asm. (Right) 滑り板(右)組	
	inch	mm	Ref.No.	Part No.	Ref.No.	Part No.	Ref.No.	Part No.	Ref.No.	Part No.
A ~ W	3/32 ~ 7/16	2.4 ~ 11.4	35	226-50857	39	226-50352	43	226-01058	47	226-00555
L ~ N	1/2 ~ 3/4	12.7 ~ 19.1	36	226-50956	40	226-50451	44	226-01157	48	226-00654
P ~ Q	7/8 ~ 1	22.2 ~ 25.6	37	226-51053	41	226-50550	45	226-01256	49	226-00753
S ~ U	1 1/4 ~ 1 1/2	31.8 ~ 38.1	38	226-51152	42	226-50659	46	226-01355	50	226-00852

下軸メタル

Needle gauge size 針幅			Front metal 前メタル		Inner metal 中メタル	
Code コード						
	inch	mm	Ref.No.	Part No.	Ref.No.	Part No.
A ~ P	3/32 ~ 7/8	2.4 ~ 22.2	51	B1802-512-0A0-A	53	B1803-515-0A0
Q ~ U	1 ~ 1 1/2	25.4 ~ 38.1	52	B1802-512-0AB	54	101-12357

ワイパー

Needle gauge size 針幅			Wiper ワイパー	
Code コード				
	inch	mm	Ref.No.	Part No.
A ~ K	3/32 ~ 3/8	2.4 ~ 9.5	55	102-09203
W ~ M	7/16 ~ 5/8	11.1 ~ 15.9	56	102-09500
N ~ P	3/4 ~ 7/8	19.1 ~ 22.2	57	102-09807
Q ~ S	1 ~ 1 1/4	25.4 ~ 31.8	58	102-09906

jintex.in

TABLE OF EXCHANGING GAUGE PARTS (4)

No.	Parts No.	Parts name	Remarks	Level	Cons	Qty
48	22600654	RIGHT SLIDER PLATE B ASM.				1
49	22600753	BED SLIDE RIGHT, ASM., C				1
50	22600852	BED SLIDE RIGHT, ASM., D				1
51	B18025120A0A	BUSHING ASM., FRONT				1
52	B18025120AB	BUSHING ASM., FRONT				1
53	B18035150A0	BUSHING ASM., INTERMEDIATE				1
54	10112357	BUSHING ASM. INTERMEDIATE				1
55	10209203	WIPER 3/32″-3/8				1
56	10209500	WIPER				1
57	10209807	WIPER				1
58	10209906	WIPER				1

jintex.in

jintex.in

As to the place changed,refer to the corresponding Rev.No.
When previous parts(Obsoleted part)and new parts(Added parts)are not interchangeable with each other:
In this case,even obsoleted parts(D.)can be ordered with the obsoleted part number,so select the parts with changed dates and place your orders.

変更箇所は,該当Rev.No.版をご参照ください。
部品の互換性がない変更の場合は,削除された品番でも,ご注文できます。

29139300
No.0942-09・・・Rev.No.

*A:Added parts追加部品/D:Obsoleted parts削除部品/E:Erratum訂正

*	Rev. No.	Page 頁	Ref. No.	Parts No. 品 番	*	Rev. No.	Page 頁	Ref. No.	Parts No. 品 番
D	08	4	48	232-04209					
D	08	4	49	226-06602					
D	08	4	50	PT-0502700-S0					

jintex.in

NUMERICAL INDEX OF PARTS

PART NO	PAGE	REF NO.
10101004	2	3
10104800	8	61
10106102	18	50
10107902	16	39
10108009	16	13
10108512	12	2
10108611	12	13
10109908	12	36
10110500	12	87
10110500	14	87
10110609	12	26
10111201	14	47
10111508	14	81
10112001	12	7
10112357	62	54
10112407	12	37
10112803	12	29
10112902	12	31
10116051	24	3
10116606	24	23
10116705	24	40
10116754	24	37
10116804	24	15
10116903	24	35
10117109	24	24
10117208	24	18
10117851	26	55
10119105	28	18
10119204	28	19
10124204	10	10
10124303	10	15
10125201	20	16
10147551	58	64
10147650	58	65
10147759	58	66
10147858	58	67
10147957	58	68
10148054	8	48
10148054	58	69
10148153	58	70
10148252	58	71
10148351	58	72
10148450	58	73
10148559	58	74
10148658	58	75

PART NO	PAGE	REF NO.
10148757	58	76
10148856	58	77
10148955	58	78
10149052	58	79
10149151	58	80
10149250	58	81
10149359	58	82
10152650	52	20
10152759	52	21
10152858	52	22
10152957	20	44
10152957	52	23
10153054	52	24
10153153	52	25
10153252	52	26
10153351	52	27
10153450	52	28
10153559	52	29
10153658	52	30
10153757	52	31
10153856	52	32
10153955	52	33
10154052	52	34
10154151	52	35
10154250	52	36
10161305	28	17
10162204	38	2
10162253	38	1
10162600	38	3
10168300	56	42
10168706	56	46
10168904	58	48
10169001	58	49
10170801	58	56
10171106	58	59
10171205	58	60
10171304	58	61
10171403	58	62
10171502	58	63
10208551	30	29
10208700	30	32
10209203	30	20
10209203	62	55
10209500	30	21
10209500	62	56

PART NO	PAGE	REF NO.
10209807	30	22
10209807	62	57
10209906	30	23
10209906	62	58
10210805	14	20·80
10211407	24	6
10211605	24	2
10216703	32	4
10237907	56	35
10238004	56	36
10238103	56	37
10238202	16	36
10238202	56	38
10238301	56	39
10238400	56	40
10238509	56	41
10238707	56	43
10238806	56	44
10238905	56	45
10239002	56	47
10239101	58	50
10239200	58	51
10239309	58	52
10239408	58	53
10239507	58	54
10239606	58	55
10239804	58	57
10239903	58	58
10315208	18	62
10315455	18	63
10315505	18	56
10602902	2	2
10604809	6	15
10611457	12	19
10623403	32	34
10697506	10	36
10697605	10	41
10741106	10	11
11006202	20	7
11006350	20	6
11007309	20	8
11018108	20	20
11024015	38	7
11024106	38	8
11024205	38	11

jintex.in

NUMERICAL INDEX OF PARTS

PART NO	PAGE	REF NO.
11024304	38	23
11045101	10	12
11047107	38	4
11072402	10	14
11072501	28	13
11072709	30	2
11076809	36	3
11076858	36	2
11076957	36	4
11093606	10	13
11102100	28	5
11102209	28	6
11102308	28	11
11110301	30	13
11110400	30	11
11110509	30	12
11110707	30	8
11394509	20	24
11956802	10	22
13167556	40	1
13167903	40	8
13168000	40	9
13168109	40	10
13168208	40	11
13765607	32	44
22600555	2	42
22600555	60	47
22600654	62	48
22600753	62	49
22600852	62	50
22601058	2	38
22601058	60	43
22601157	60	44
22601256	60	45
22601355	60	46
22602007	2	17·53
22602254	2	20
22602304	2	32
22602601	2	46
22603013	2	25
22603112	2	27
22603203	2	29
22603401	36	1
22603609	4	50
22603708	4	51
22603906	6	30
22604003	6	41
22604300	6	43
22604409	6	37
22604508	6	17
22604607	6	33
22604656	6	32
22604904	6	42
22605307	6	2
22605356	6	1
22605406	6	7
22606008	8	67
22606800	8	50
22607006	8	54
22607105	8	58
22607204	8	59
22607303	8	52
22607402	8	53
22608103	20	10
22608152	20	5
22608400	20	39·46
22608509	4	61
22609002	16	27
22609101	16	31
22609200	16	26
22609309	18	58
22609408	16	45
22609606	18	57
22609705	16	38
22609754	16	37
22609804	12	9
22610000	16	6
22610109	16	2
22610208	16	4
22610307	16	8
22610406	16	24
22610505	16	16·66
22610604	16	9
22610901	18	16·66
22611602	12	16
22611651	12	15
22611701	12	12
22611909	14	70
22612006	12	23
22612055	12	22
22612105	12	27
22612204	12	28
22612303	12	30
22612402	12	24
22612501	12	32
22612600	14	84
22612659	14	83
22612758	14	77
22612808	12	33
22612907	14	86
22613004	14	52
22613103	14	50
22613400	14	76
22613509	12	35
22613608	14	72
22613905	14	49
22614101	12	46
22615009	14	57
22615108	14	56
22615207	14	60
22615306	14	59
22615454	14	55·88
22615462	14	55·88
22615702	14	61
22615801	14	63
22615959	14	64
22616254	14	65
22617005	20	34·48·49
22617104	20	23
22617609	10	30
22617708	10	24
22617807	10	23
22617906	10	17
22618052	10	9
22618060	10	1～4
22618102	10	6
22618201	10	42
22618300	10	5
22618458	10	1～4
22618557	10	1～4
22618656	10	1～4
22618706	10	40
22618805	10	31
22618904	10	27
22619001	32	28

jintex.in

NUMERICAL INDEX OF PARTS

PART NO	PAGE	REF NO.
22619100	2	11·56
22619209	32	11
22619415	32	18
22619605	32	27
22619704	34	63·64
22619803	32	25
22620108	32	9
22620355	32	6
22620454	32	7
22620504	32	14
22620702	32	8
22620801	20	32
22620801	32	21
22620900	2	14
22621056	36	40
22621106	36	36
22621155	36	30
22622005	38	24
22622104	38	15
22622351	6	31
22622401	6	29
22623102	12	1
22623201	6	44
22625008	48	1
22625107	48	2
22625107	60	8
22625206	48	3
22625206	60	9
22625305	48	4
22625305	60	10
22625404	48	5
22625404	60	11
22625503	2	40
22625503	48	6
22625503	60	12
22625602	48	7
22625602	60	13
22625701	48	8
22625701	60	14
22625800	48	9
22625909	48	10
22626006	48	11
22626105	48	12
22626204	48	13
22626303	48	14

PART NO	PAGE	REF NO.
22626402	48	15
22626501	48	16
22626600	48	17
22626709	48	18
22626808	48	19
22627152	60	22
22627251	60	23
22627350	60	24
22627459	60	25
22627558	60	26
22627657	60	27
22627756	60	28
22628002	60	1
22628101	60	2
22628200	60	3
22628309	60	4
22628408	60	5
22628507	60	6
22628606	60	7
22630107	48	21
22630206	48	39
22630404	48	40
22630503	48	41
22630602	16	35
22630602	48	42
22630800	48	43
22630909	48	44
22631006	48	45
22631105	48	46
22631303	48	47
22631402	50	48
22631501	50	49
22631709	50	50
22631808	50	51
22631907	50	52
22632004	50	53
22632103	50	54
22632202	50	55
22634000	60	15
22634109	60	16
22634208	60	17
22634307	60	18
22634406	60	19
22634505	60	20
22634604	60	21

PART NO	PAGE	REF NO.
22635007	48	20
22635205	48	22
22635304	48	23
22635403	48	24
22635502	48	25
22635700	48	26
22635809	48	27
22635908	48	28
22636005	48	29
22636203	48	30
22636302	48	31
22636401	48	32
22636609	48	33
22636708	48	34
22636807	48	35
22636906	48	36
22637003	48	37
22637102	48	38
22637557	52	1
22637656	52	2
22637755	52	3
22637854	52	4
22637953	52	5
22638050	52	6
22638258	52	7
22638357	52	8
22638456	52	9
22638555	52	10
22638753	52	11
22638852	52	12
22638951	52	13
22639157	52	14
22639256	52	15
22639355	52	16
22639454	52	17
22639553	52	18
22639652	52	19
22640353	52	37
22640452	52	38
22640551	52	39
22640759	52	40
22640858	52	41
22640957	52	42
22641054	52	43
22641252	52	44

jintex.in

NUMERICAL INDEX OF PARTS

PART NO	PAGE	REF NO.
22641351	52	45
22641450	52	46
22641658	52	47
22641757	54	48
22641856	54	49
22641955	54	50
22642052	54	51
22642151	54	52
22647051	60	29
22647150	60	30
22647259	60	31
22647358	60	32
22647457	60	33
22647556	60	34
22650055	2	45
22650352	2	43
22650352	60	39
22650451	60	40
22650550	60	41
22650659	60	42
22650857	2	39
22650857	60	35
22650956	60	36
22651053	60	37
22651152	60	38
22651202	4	54
22651459	4	49
22651509	6	21
22651558	6	20
22651566	6	19
22651608	6	45
22651905	8	68
22652002	16	28
22652101	16	10
22653059	14	79
22653158	14	78
22653505	14	53
22653604	14	51
22653802	14	48
22654008	26	61
22654107	24	31
22654206	24	5
22654255	24	4
22654305	26	53
22654404	24	44

PART NO	PAGE	REF NO.
22654503	26	48
22654552	24	47
22654602	26	49
22654800	24	14
22654909	20	25
22654958	20	22
22655005	26	60
22655104	24	22
22655153	24	20
22655302	24	11
22655401	24	10
22656003	28	41
22656102	28	33
22656201	28	32
22656300	28	28
22656409	28	27
22656508	28	4
22656557	28	1·2
22656607	28	12·14
22656904	28	12·14
22656953	28	1·2
22657050	30	28
22657100	30	18
22657159	30	1
22657209	30	6
22657308	30	9
22657803	4	11·56
22660104	56	1
22660203	56	2
22660302	56	3
22660401	56	4
22660500	56	5
22660609	2	41
22660609	56	6
22660708	56	7
22660807	56	8
22660906	56	9
22661003	56	10
22661102	56	11
22661201	56	12
22661300	56	13
22661409	56	14
22661508	56	15
22661607	56	16
22661706	56	17

PART NO	PAGE	REF NO.
22665004	56	18
22665103	56	19
22665202	56	20
22665301	56	21
22665400	56	22
22665509	56	23
22665707	56	24
22665806	56	25
22665905	56	26
22666002	56	27
22666200	56	28
22666309	56	29
22666408	56	30
22666606	56	31
22666705	56	32
22666804	56	33
22666903	56	34
22671101	44	40
22671853	44	16
22671952	44	17
22672059	44	18
22672158	44	19
22672257	44	20
22672356	44	21
22672455	44	22
22672554	44	23
22672653	44	24
22672752	44	25
22672851	44	26
22672950	44	27
22673057	44	28
22673156	44	29
22673255	44	30
22673354	44	31
22673453	44	32
22673552	44	2
22673651	44	3
22673750	44	4
22673859	44	1
22673958	44	5
22674055	44	6
22674154	44	7
22674253	44	8
22674352	44	9
22674451	44	10

jintex.in

NUMERICAL INDEX OF PARTS

PART NO	PAGE	REF NO.
22674550	44	11
22674659	44	12
22674758	44	13
22674857	44	14
22674956	44	15
22675557	44	38
22675656	44	36
22675706	44	33
22675805	44	42
22675854	44	41
22675904	44	35
22680656	6	11
22688501	14	85
22811558	4	60
22818009	4	17·53
22901805	2	34
22904155	18	52
22907109	20	43
22907505	20	36
22907604	20	37
22907703	20	38
22907802	20	1
22908552	20	4
22908800	20	15
22908909	20	13
22911804	16	18
22911903	16	21
22912000	16	20
22912109	16	19
22920201	20	19
22920706	2	23
22924708	32	1
22927305	36	25
22927354	36	11
22927404	36	26
22927602	36	27
22928105	36	20
22928303	36	35
22928402	36	34
22928501	36	12
22928709	36	24
22928808	36	32
22928907	36	42
22929004	36	31
22930309	40	12

PART NO	PAGE	REF NO.
22930309	42	7
22930408	40	6
22930408	42	5
22930507	40	3
22930507	42	2
22930556	40	2
22930556	42	20
22930705	40	4
22930705	42	3
22930804	40	16
22930804	42	11
22930903	40	15
22930903	42	10
22931000	40	14
22931000	42	9
22931109	40	13
22931109	42	8
22931307	40	7
22931307	42	6
22931406	40	5
22931406	42	4
22932453	38	10
22934202	38	20
22934251	38	16
22934301	38	21
22934400	38	19
22934509	38	17
22934608	38	18
22937965	6	28
22940506	16	22
22951552	2	8
22952501	28	37
22957104	30	14
23203706	6	5
23203805	6	6
23204258	6	47
23204308	6	10
23204506	8	63～65
23204605	8	63～65
23204704	8	63～65
23204803	2	18
23630007	32	61
23630007	34	61
26226209	28	40
26226407	28	39

PART NO	PAGE	REF NO.
26910158	42	1
40009196	30	7
40012461	24	26
40012577	32	23
40017058	20	41
40021415	4	62
40030133	22	34·48·49
40034204	20	11
40039672	22	34·48·49
B1104051000	2	31
B1202512000	6	14
B1214038000	34	52
B1414512000	34	59
B1438512B00	8	51
B1501581000	20	40
B1505227T00A	20	39·46
B1515051000	24	46
B1521555000	20	2
B1603512000	18	48
B1604012000A	16	43
B1610512000	16	33
B1613512D0H	50	56
B1613512E0H	50	57
B1613512F0H	50	58
B1613512G0H	50	59
B1613512H0H	50	60
B1613512K0H	50	61
B1613512L0H	50	62
B1613512M0H	50	63
B1613512N0H	50	64
B1613512P0H	50	65
B1613512Q0H	50	66
B1613512R0H	50	67
B1613512S0H	50	68
B1613512T0H	50	69
B1613512U0H	50	70
B1633470000	18	65
B1636581B00	16	32
B1653470000	18	67
B18025120A0A	12	3
B18025120A0A	62	51
B18025120AB	62	52
B18035150A0	12	11
B18035150A0	62	53
B1816512000	12	5

jintex.in

NUMERICAL INDEX OF PARTS

PART NO	PAGE	REF NO.
B1820051000	12	39
B1821051000	12	41
B1822051000	12	42
B1823051000	12	45
B1834512000A	32	36
B1850512000	32	31
B1851512000	32	30
B3041980000	26	59
B3112704000	10	21
B3114232000	10	20
B3121352000	10	39
B3126012000	10	16
B3129012A00	10	18
B31375270A0	10	32
B3138527000	10	29
B3139527000	10	33
B3141527000	10	25
B3142527000	10	34
B3143527000	10	35
B3417051000	26	62
B3418180000	24	17
B3517009000	32	17
B3524552000	34	53
B3534012000	34	55
B3534155000	34	51
B3538112000	34	56
B3538112000	44	43
B8233555000	36	45
B9117051000	12	20·80
BT0400201EB	46	65
BT0500300EA	18	53
BT0600401EB	44	44
CM300200101	4	59
CM3002001A1	4	58
CQ202000000	6	3
CQ202000000	12	44
CQ252000000	6	8
CQ252000000	18	54
CQ505000000	6	12
CS070081BSH	24	33
CS102121ASH	16	11
CS1470710SH	24	29
CS1471012SH	14	74
D2112555B00	2	48
D2112555B00	4	48

PART NO	PAGE	REF NO.
D2113555B00	46	66
D2427555B00B	24	42
D2428555B00A	24	41
D2430555B00	24	39
D2464555B00	28	22
D3129555D00	10	19
D3159555B00	20	26
D3163555B00A	20	30
D3164555B00	20	28
D3171415B0H	14	62
EA9500B0100	26	65
EA9500B0100	34	58
EA9500B0100	46	67
HA000590000	30	15
HA001900000	28	10
HK034610020	46	61
HK034610100	46	52
HK034610140	26	57
HK034620020	46	62
HK034630000	46	64
HK03464000B	26	56
HK03464000B	28	35
HK03464000B	30	24
HK03464000B	46	63
HW100470990	46	54
HW200390000	30	16
HW500070000	28	9
HW500070000	30	17
HW500140000	46	55
M4002110000	6	22
M40071100AA	6	23
M40071100AB	6	24
M6043350AAA	4	57
MDP500B1400	8	66
NM6030001SB	46	59
NM6040002SE	40	24
NM6050001SE	40	28
NM6050001SE	42	18
NM6050001SP	24	43
NM6060001SB	46	60
NM6060001SE	38	12
NM6160511SE	40	27
NM6160511SE	42	17
NS6080210SP	16	46
NS6090310SP	30	26

PART NO	PAGE	REF NO.
NS6090310SP	32	33
NS6110310SN	32	5
NS6110310SP	10	8
NS6110310SP	30	10
NS6110310SP	32	37
NS6110420SP	12	43
NS6110420SP	32	16
NS6120310SP	32	13
NS6150430SP	8	57
NS6620310SP	20	27
NS6680320SP	18	59
NS6700420SP	32	20
PF0552040A0	44	45
PJ020500001	44	46
PJ301040502	44	47
PJ301060503	46	48
PJ301065201	46	49
PJ308040002	46	68
PJ309005203	46	50
PS0300201KP	24	25
PS0600502KP	20	35
PV130523000	46	51
RE0320000K0	30	31
RE0400000K0	28	23
RE0500000K0	16	3
RE0500000K0	20	18
RE0500711KP	16	42
RE0900000K0	16	14
RE1000000K0	38	9
RO037180100	20	3
RO092270200	16	17
RO098240100	38	6
RO195240100	32	2
RO437200200	6	35
SB120000100	6	34
SB120000200	12	17
SD0470281SP	10	7
SD0490261SP	36	37
SD0500301SP	30	27
SD0600271SP	24	19
SD0600322SD	20	17
SD0640321SP	28	34
SD0650305TP	26	52
SD0650321TP	30	5
SD0720332SP	20	14

jintex.in

NUMERICAL INDEX OF PARTS

PART NO	PAGE	REF NO.
SD0800422CP	16	5
SD0870601SP	8	56
SD0900701TP	18	61
SK3412000SC	36	9
SK3482500SC	36	44
SK3482500SC	46	69
SL4030691SC	46	58
SL4030891SC	30	4
SM0081001SD	38	5
SM4031501SC	28	8
SM4032001SC	46	56
SM4040655SP	28	3
SM4041001SC	40	20
SM4041201SC	40	22
SM4042001SC	40	23
SM4051405SE	40	18
SM4051405SE	42	13
SM4061001SB	46	57
SM6061610SC	40	17
SM6061610SC	42	12
SM6082502TP	14	69
SM8040802SP	28	7
SM8050502TP	16	44
SM8063012TR	38	13
SM9061203SE	38	22
SM9061853SR	38	14
SQ1110401MZ	32	63·64
SQ1110401MZ	34	63·64
SQ1150451MZ	32	39
SS2080810SP	24	1
SS2090710TP	2	35
SS2091210SP	44	39
SS2110920TP	2	37
SS2110920TP	24	27
SS2110930SP	32	29
SS3090520SP	30	33
SS3090610SP	2	19
SS4091520SP	46	70
SS4110515SP	14	66
SS4110515SP	22	47
SS4110515SP	36	33
SS4110615SP	10	37
SS4110615SP	32	24
SS4110715SP	20	29
SS4110715SP	32	26

PART NO	PAGE	REF NO.
SS4110815SP	2	4
SS4110815SP	14	58
SS4110815SP	16	25
SS4110815SP	34	57
SS4111015SP	4	52
SS4111015SP	20	33
SS4111215SP	20	31
SS4111215SP	32	15
SS4111215SP	36	5
SS4111815SP	32	3
SS4120615SP	2	9
SS4120615SP	10	43
SS4120615SP	28	43
SS4120615SP	30	25
SS4121015SP	2	21
SS4150915SP	2	16
SS4153015SP	28	29
SS5090610SP	4	55
SS5090610SP	24	9
SS5090610SP	44	34
SS6081810SP	18	47
SS6090630SP	2	36
SS6090670TP	16	1
SS6090810SP	14	82
SS6111052TP	24	28
SS6111140SP	2	5
SS6111210SP	6	26
SS6111610SP	32	35
SS6120940SP	26	63
SS6121212TP	24	13
SS6121610TP	8	60
SS6121610TP	18	60
SS6121610TP	24	54
SS6121610TP	26	54
SS6121610TP	32	12
SS6121610TP	36	6
SS6121840SP	28	38
SS6121860SP	16	23
SS6151040SP	26	58
SS6151220SP	24	38
SS6152440SP	8	55
SS6153040SP	12	38
SS6580752TP	16	34
SS6661110SP	6	16
SS6661110SP	16	29

PART NO	PAGE	REF NO.
SS7081310SP	36	38
SS7090510SP	10	28
SS7090710SP	24	12
SS7090910SP	8	62
SS7090910SP	32	32
SS7090910TP	20	45
SS7110350SP	36	17
SS7110510SP	18	64
SS7110710SP	14	73
SS7110710SP	16	30
SS7110710SP	28	15
SS7110840SP	36	41
SS7110910SP	18	55
SS7111310TP	18	49
SS7111810SP	14	54
SS7120760SP	6	46
SS7120760SP	12	21
SS7120760SP	28	36
SS7120910SP	16	15
SS7121410TP	16	7
SS7151210SP	28	24
SS7151610SP	24	16
SS7681750TP	6	39
SS8080610SP	24	7
SS8080660TP	8	49
SS8110410TP	24	30
SS8110510SP	24	34
SS8110510SP	36	23
SS8111010TP	24	21
SS8120740SP	2	24
SS8151150SP	12	14
SS8151150SP	18	51
SS8151150TP	6	9
SS8151550SP	6	25
SS8660530TP	6	36
SS8660530TP	12	75
SS8660530TP	14	75
SS8660610TP	16	12
SS8660810TP	12	6
SS8660810TP	20	42
SS8660810TP	24	32
SS8661030SP	12	18
SS8680540SP	6	13
SS8680810TP	6	40
SS8681650TP	6	38

jintex.in

NUMERICAL INDEX OF PARTS

PART NO	PAGE	REF NO.
SS8701782TP	32	19
SS9080410SP	24	8
SS9110460CP	2	33
SS9111010SP	26	50
SS9111010SP	28	21
SS9111010SP	30	30
SS9151440CP	16	40
TA0500601M0	14	67
TA0750404R0	2	12
TA0750704R0	2	15
TA1250406R0	2	47
TA1250406R0	4	47
WP0371016SD	12	34
WP0371016SD	30	19
WP0450801SD	6	27
WP0480856SP	36	39
WP0501016SC	36	43
WP0501016SD	10	38
WP0501016SD	26	64
WP0501016SD	28	20
WP0501016SD	36	8
WP0612056SD	28	31
WP0621016SD	16	41
WP0621016SD	28	26
WP0753016SZ	24	36
WP0850002SP	14	68
WP1612616SE	40	25
WP1612616SE	42	15
WS0451040KP	36	7
WS0510002KN	40	29
WS0510002KN	42	19
WS0610002KP	28	30
WS0631510KP	28	25
WS1643202KR	40	26
WS1643202KR	42	16
WT0530002KS	2	10

jintex.in

jintex.in