JINTEX

Sewing Machine Spare Parts

Siruba 700LQ

Sewing Machine Part Book

28 pages

jintex.in | enquiry@jintex.in | +91 96321 55211

33 Park Road, Akkipet Circle, Bangalore

SiRUBA GAGE PARTS LIST	Series	Remark	Page	Date
	700LQ		1 / 1	2024/02/19

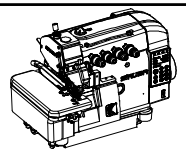

機型 MODEL		針板 NEEDLE PLATE	送具 FEED DOG		送具 FEED DOG	押具 PRESSER FOOT	勾針 LOOPER	針留 NEEDLE CLAMP	束子 COLLER	衝程 CRANK	衝程 CRANK	大心 Crankshaft	勾針連桿座 Upper Looper Holder	過線器 Bracket	下刀架 Lower Knife Holder	針號 NEEDLE
737LQ	504M-2-15	E207K	D201K	D209	H201K	P211-A	LP225	KG231K-E	KJ247L-E	KF203-E	KJ206-E	KD201L	KJ245	KJ219	KR209	DCX27#9
	504M-3-04	E268	D210K	D207	H204K	P220-A1										DCX27#11
	504M-3-04/ECA-U	E222U				P201-14A1										
	504M-3-04/ECB-U															
747LQ	514M-3-24	E252	D210K	D207	H204K	P220-A2	LP226	KG242K-E	KJ246L-E	KF203-E	KJ203-E	KD201L	KJ242	KJ219	KR209	DCX27#11*2
	514M-3-24/ECA-U	E229U				P220-A4										
	514M-3-24/ECB-U															
	514M-3-24/VTE-U															
	514H-3-28	E239	D210K	D207	H204K	P201-8A	LP227A		KJ248L-E			KD201LA		KJ238		
757LQ	516M-3-35	E269	D208K	D207	H208K	P504K-A	LP226	KG253K-E	KJ247L-E	KF203-E	KJ206-E	KD201L	KJ245	KJ219	KR219	DCX27#11*2
	516M-3-35/ECA-U	E217U				P504J-A										
	516M-3-35/ECB-U															
	516M-3-55	E254	D208K	D207	H208K	P502K-A	LP226	KG255K-E	KJ247L-E	KF203-E	KJ206-E	KD201L	KJ245	KJ219	KR219	DCX27#14*2
	516M-3-55/ECA-U	E218U				P502J-A										DCX27#11*2
	516M-3-55/ECB-U															
767LQ	644M-3-324	E272	D208K	D207	H209K	P233K-A	LP226	KG433K-E	KJ246L-E	KF203-E	KJ203-E	KD201L	KJ242	KJ219	KR219	DCX27#11*3
	644M-3-324/ECA-U	E219U														
	644M-3-324/ECB-U															
	644M-3-524	E273	D208K	D207	H209K	P255K-A	LP226	KG455K-E	KJ246L-E	KF203-E	KJ203-E	KD201L	KJ242	KJ219	KR219	DCX27#11*3
	644M-3-524/ECA-U	E224U														
	644M-3-524/ECB-U															

jintex.in

SIRUBA PARTS LIST	Series	Parts Group	Subclass / Remark	Page
	700LQ	KA		1/1
				Date
				2021/04/07

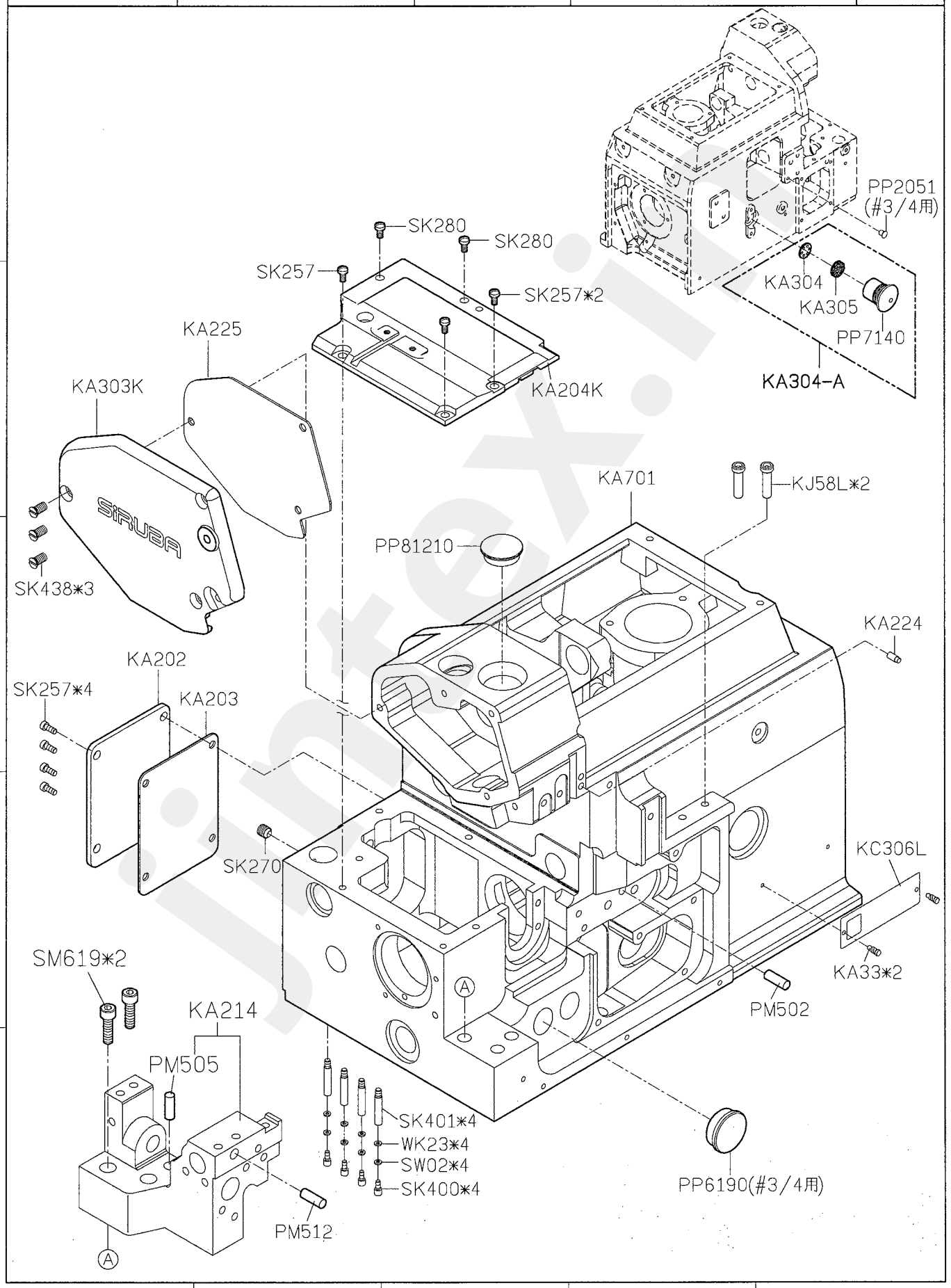

jintex.in

SIRUBA PARTS LIST	Series	Parts Group	Subclass / Remark	Page
	700LQ	KB		1/1
				Date
				2021/03/25

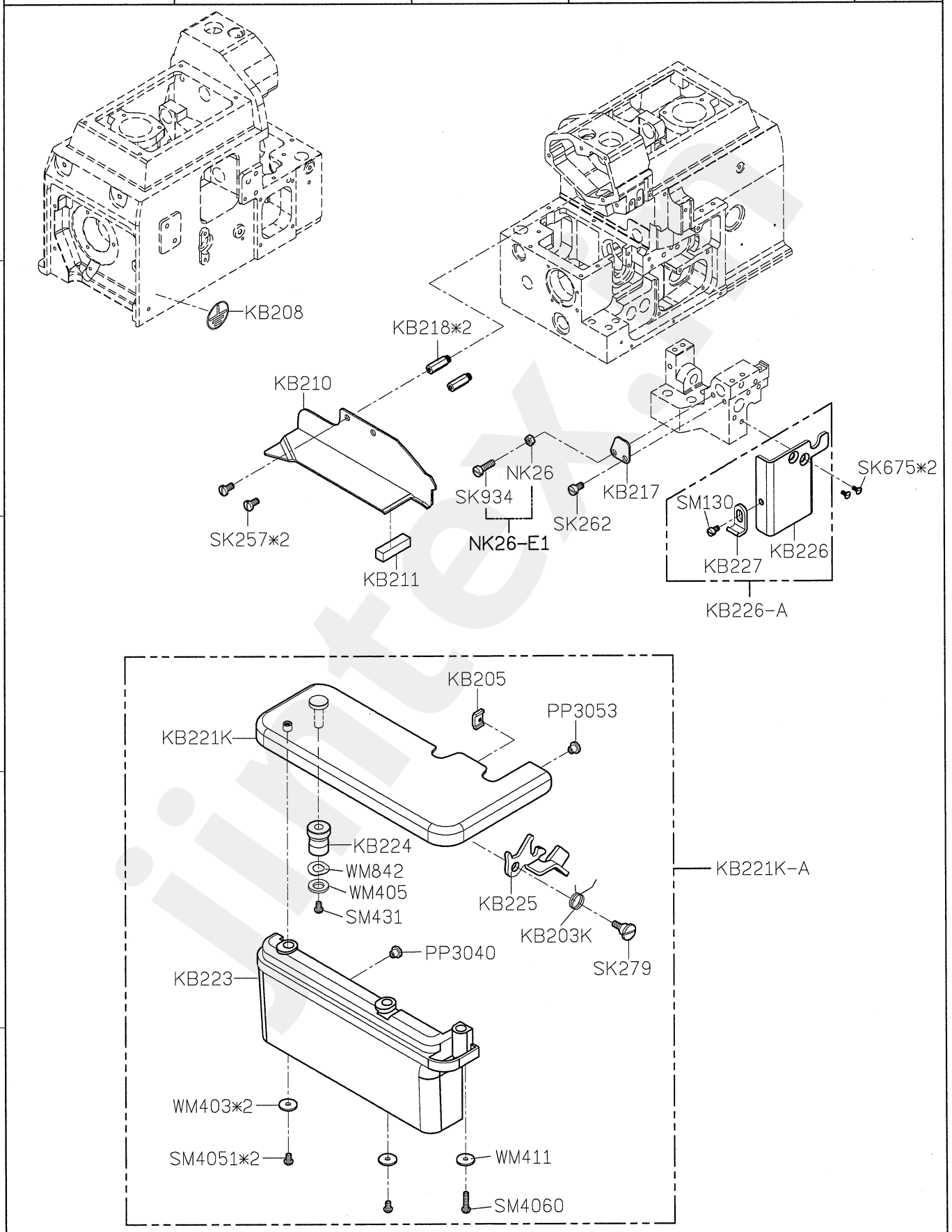

jintex.in

SIRUBA PARTS LIST	Series	Parts Group	Subclass / Remark	Page
	700LQ	KC		1/1
				Date
				2023/01/03

MODEL	#3/#4	#5/#6
PARTS NO	KC209K	KC219K
	KC303K-4	KC303K-5
	SM431*2	SM446*2

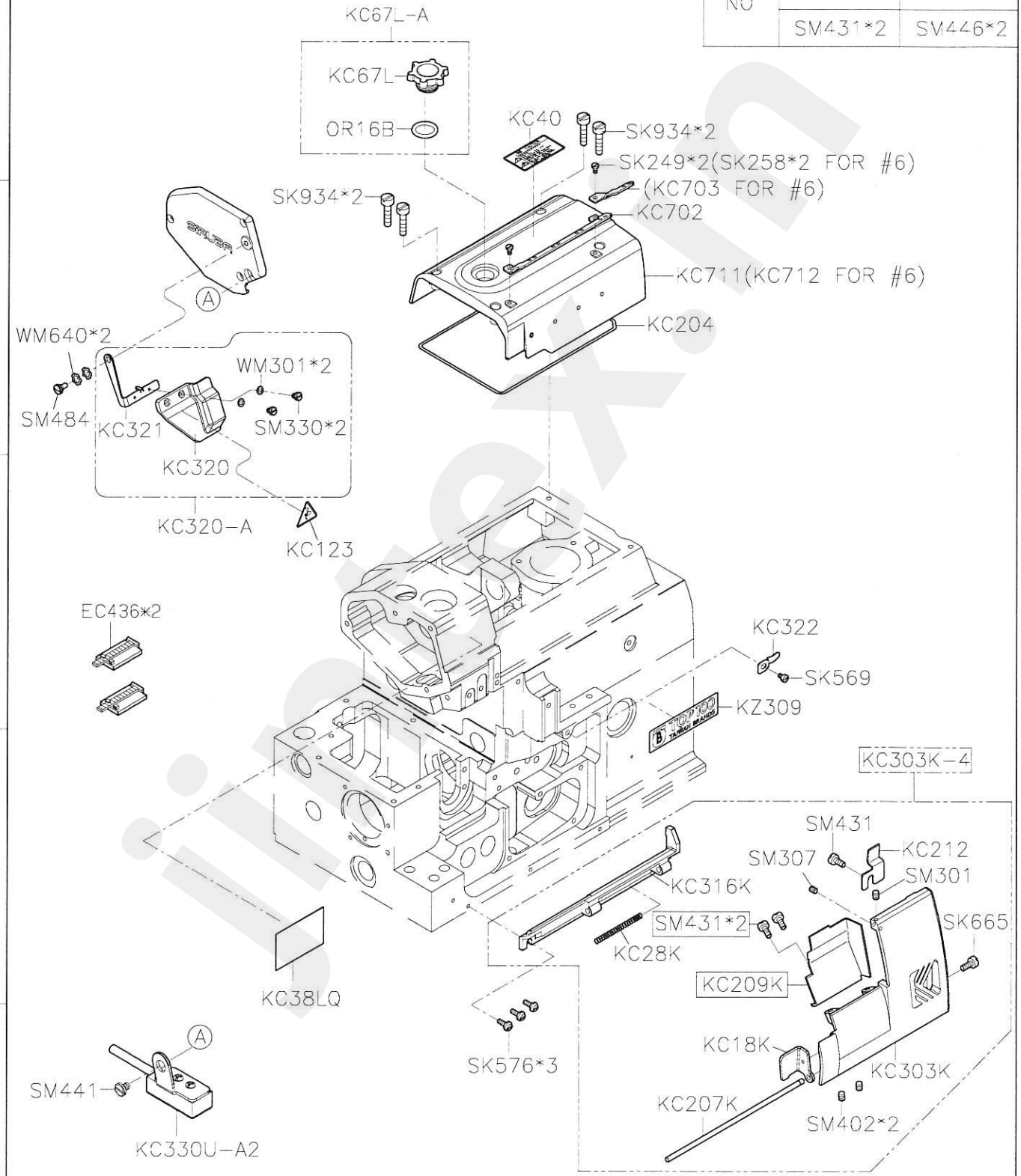

jintex.in

SIRUBA PARTS LIST	Series	Parts Group	Subclass / Remark	Page
	700LQ	KD		1/2
				Date
				2022/06/16

MODEL	#3/#4	#5/#6
PARTS NO	KD204	KD217
	SM603B	KD220
	SK241*3	SK539*2 SK872*1
	KD201L	

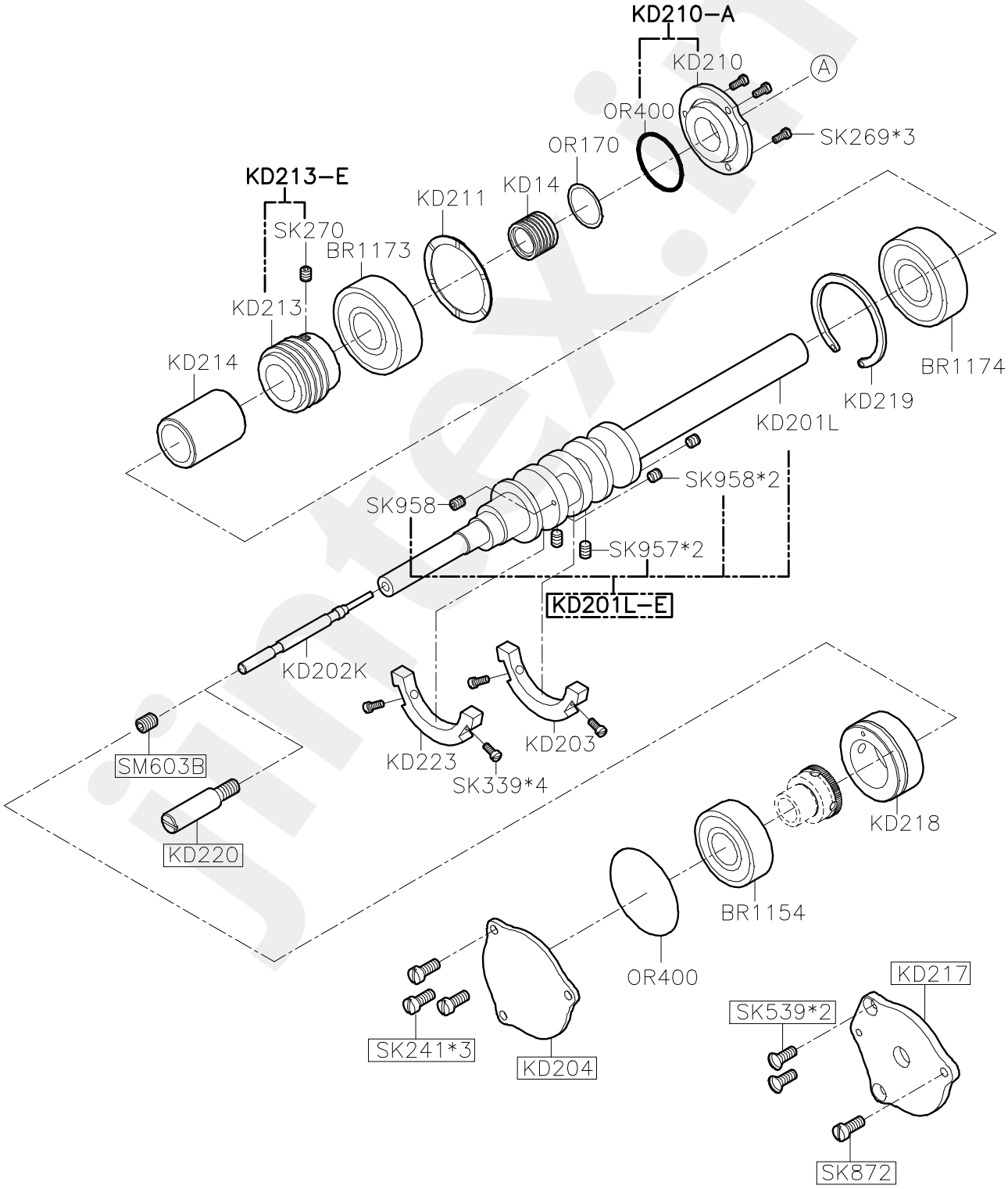

jintex.in

SIRUBA PARTS LIST	Series	Parts Group	Subclass / Remark	Page
	700LQ	KD		2/2
				Date
				2021/03/25

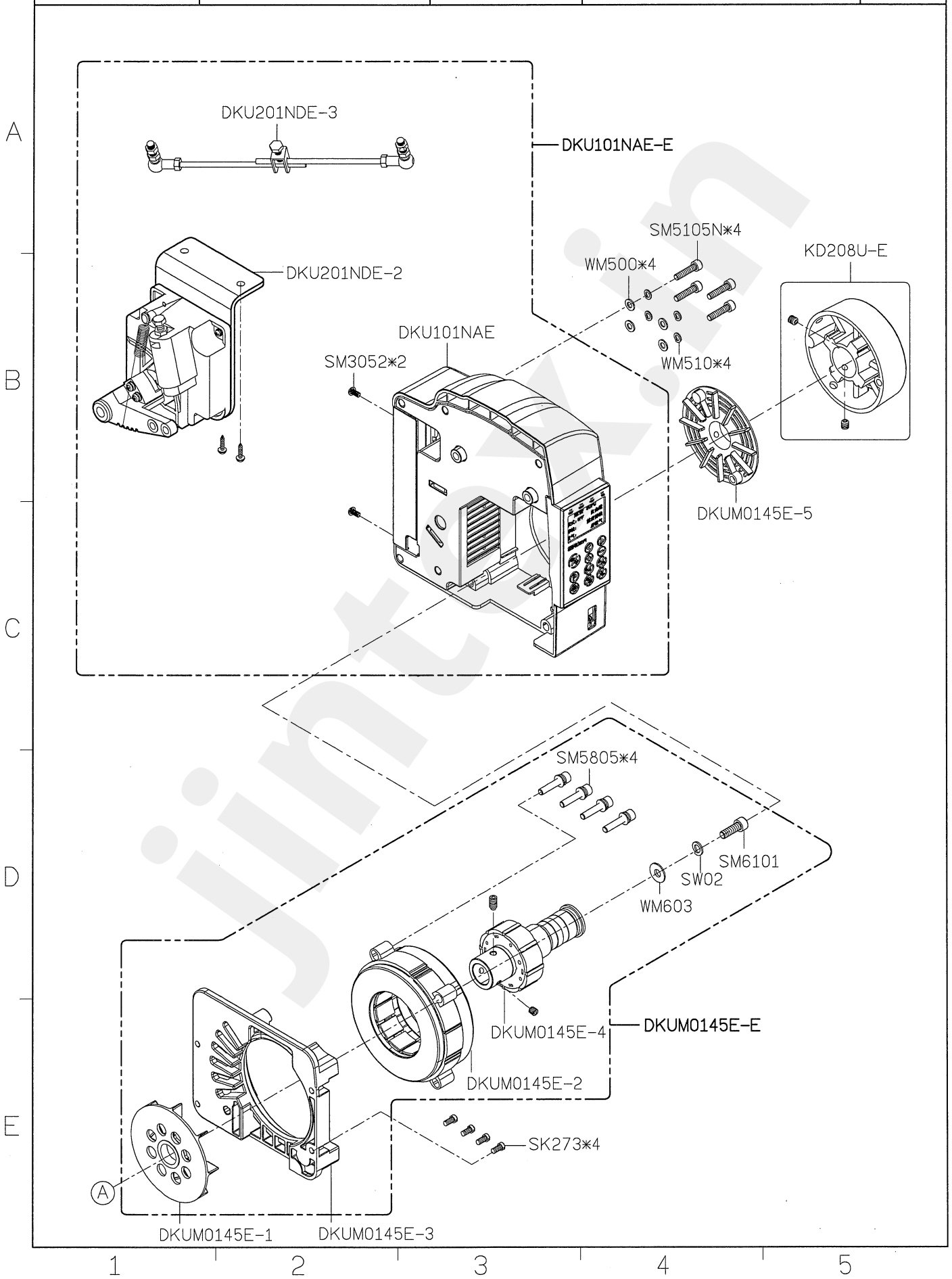

jintex.in

SIRUBA PARTS LIST	Series	Parts Group	Subclass / Remark	Page
	700LQ	KF		1/1
				Date
				2021/03/25

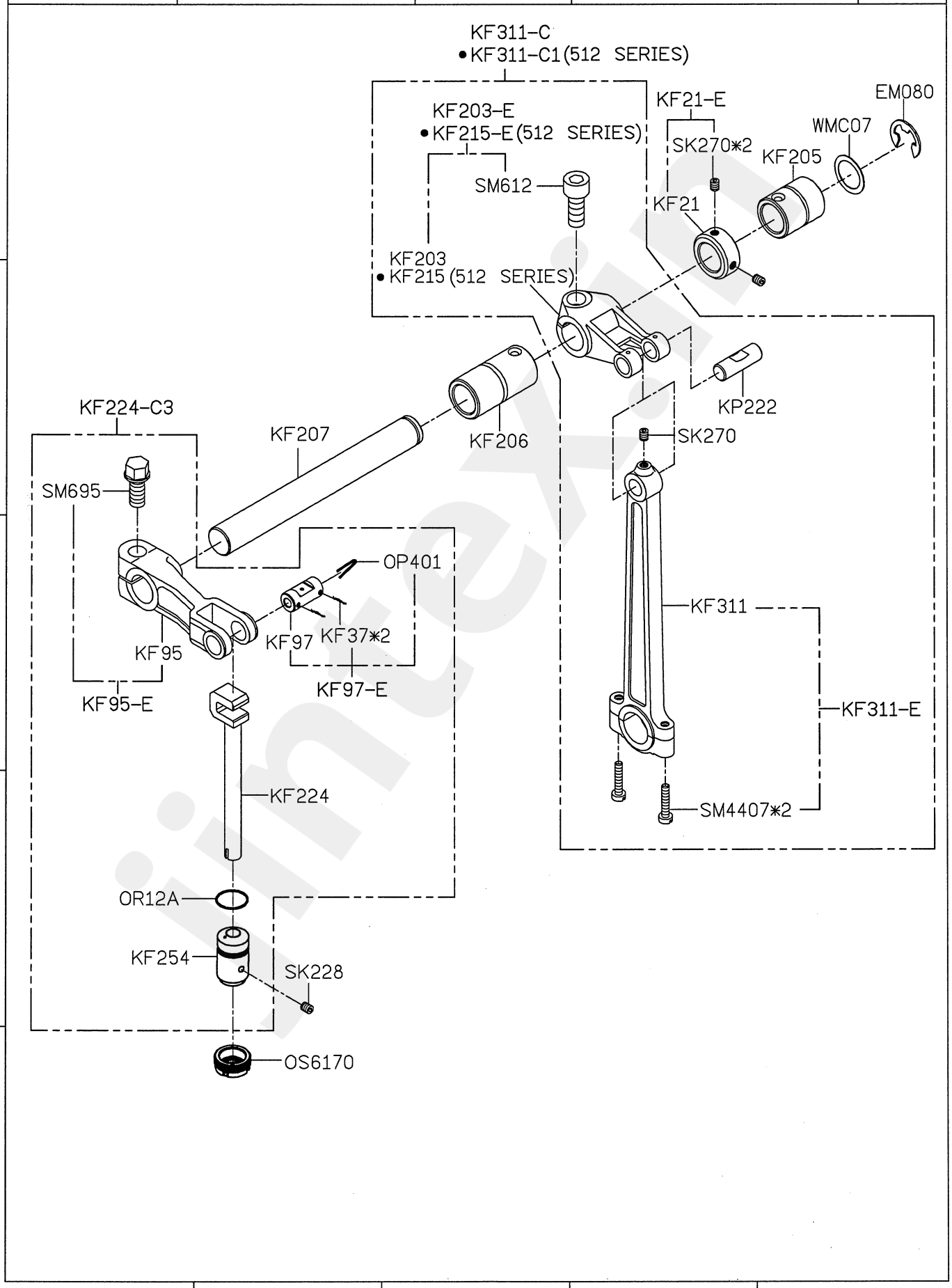

jintex.in

SIRUBA PARTS LIST	Series	Parts Group	Subclass / Remark	Page
	700LQ	KG		1/1
				Date
				2022/10/04

MODEL	#3	#4	#5	#6
PARTS NO	KG262	KG211K	KG262	KG211K
	KG248	KG213K	KG239	KG246
	KG250K	KG269	KG243K	KG251K
	KG222	KG222	KG245	KG245
	KG225	KG225	KG261	KG261
	KG201	KG201	KG244	KG244
	KG93	KG92	KG267	KG267
	SK216	SK216	SK216*2	SK216*2
	SK250N	SK250N	SK250N*2	SK250N*2
	SK437N	SK437N	SK569 SK674N	SK569 SK674N
	SM251	SM251	SM250	SM250
	KG212−3	KG212−4	KG241−5	KG241−6
	KG223−4	KG223−4	KG223−5	KG223−5
			KG238	KG238
	KG41			KG41
	KG41−E			KG41−E
			KG234	KG234

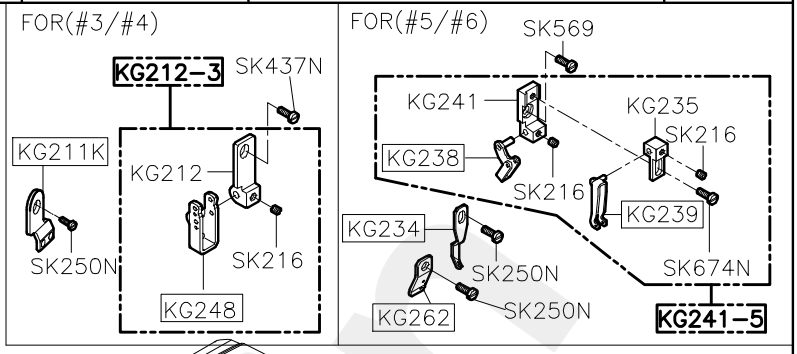

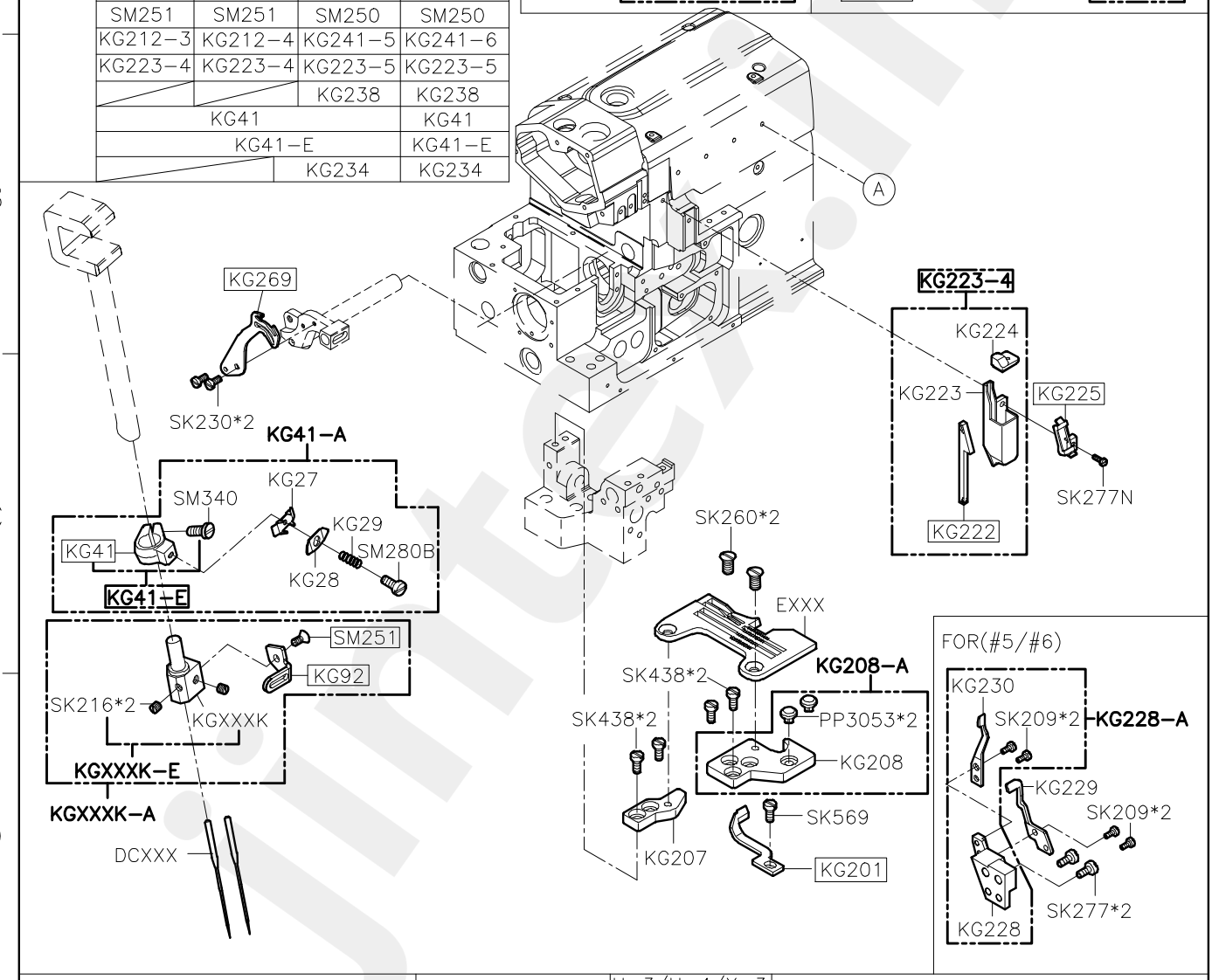

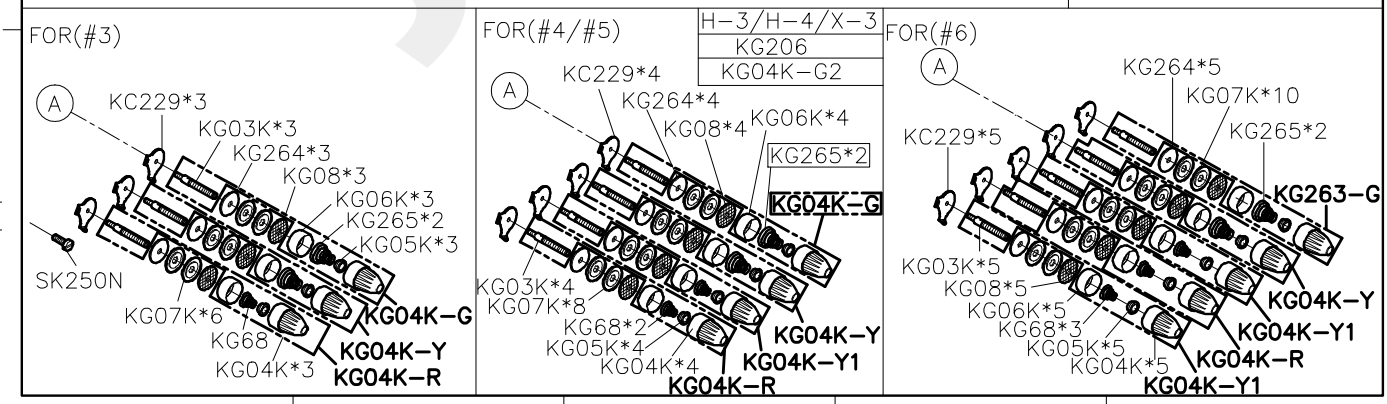

jintex.in

SIRUBA PARTS LIST	Series	Parts Group	Subclass / Remark	Page
	700LQ	KJ		1/1
				Date
				2022/06/08

MODEL	#3/#5	#4/#6
PARTS NO	KJ247L-E	KJ246L-E
	KJ206	KJ203
	KJ206-E	KJ203-E
	KJ206-C1	KJ203-C1
	KJ245	KJ242
	KJ245-C2	KJ242-C2

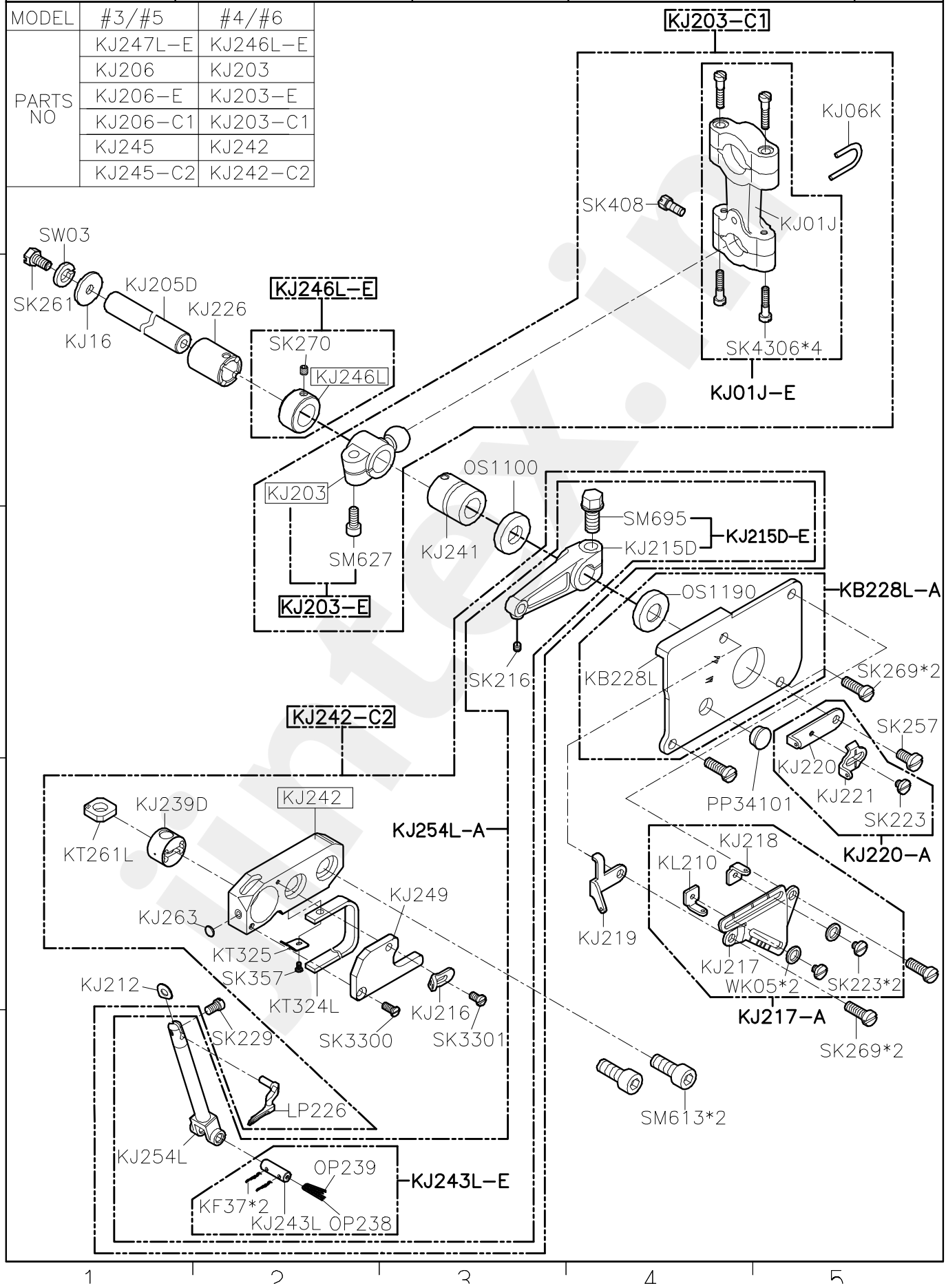

jintex.in

SIRUBA PARTS LIST	Series	Parts Group	Subclass / Remark	Page
	700LQ	KL		1/1
				Date
				2021/03/25

MODEL	#3/#4	#5/#6
PARTS NO	KJ222	
	KL202	
	KL211-A	
	KL205	KL209
		SK270
	KL205-E	KL209-E
	KL205-C	KL209-C

KL SERIES KL SERIES KM SERIES
P+R+S =KL209-C

KL SERIES KL SERIES
P+Q =KL205-C

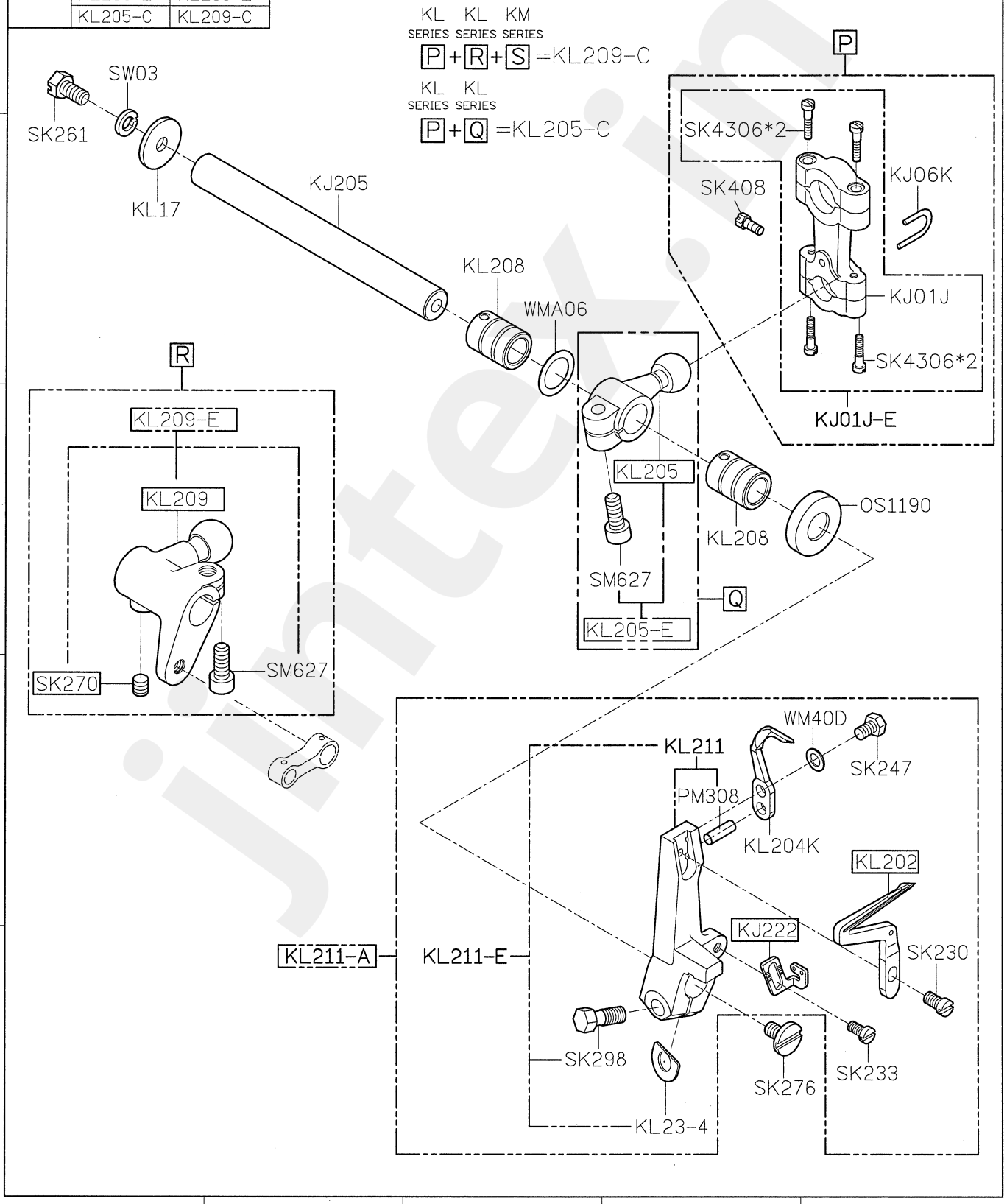

jintex.in

SIRUBA PARTS LIST	Series	Parts Group	Subclass / Remark	Page
	700LQ	KM		1/1
				Date
				2021/03/25

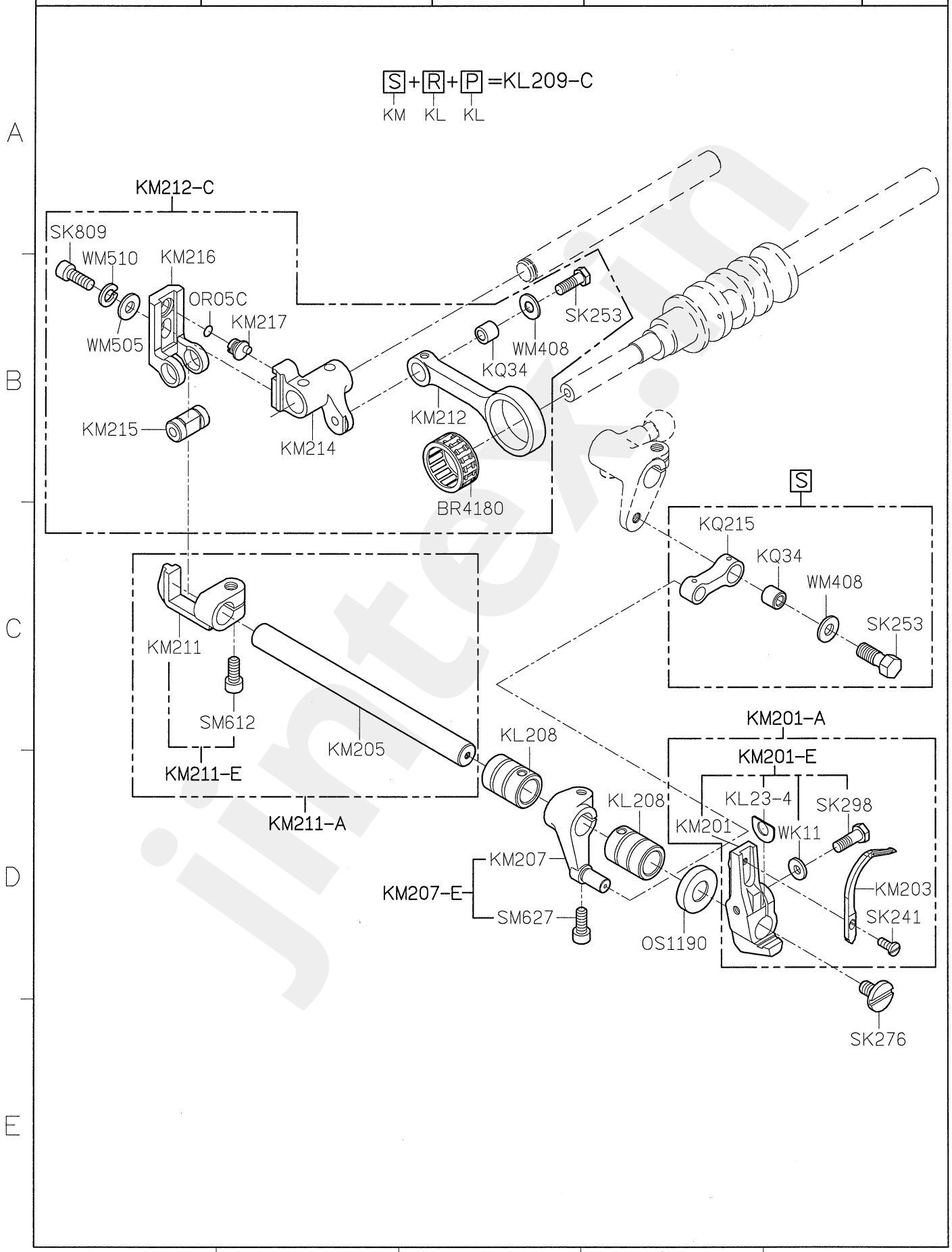

jintex.in

SIRUBA PARTS LIST	Series	Parts Group	Subclass / Remark	Page
	700LQ	KN		1/1
				Date
				2021/03/25

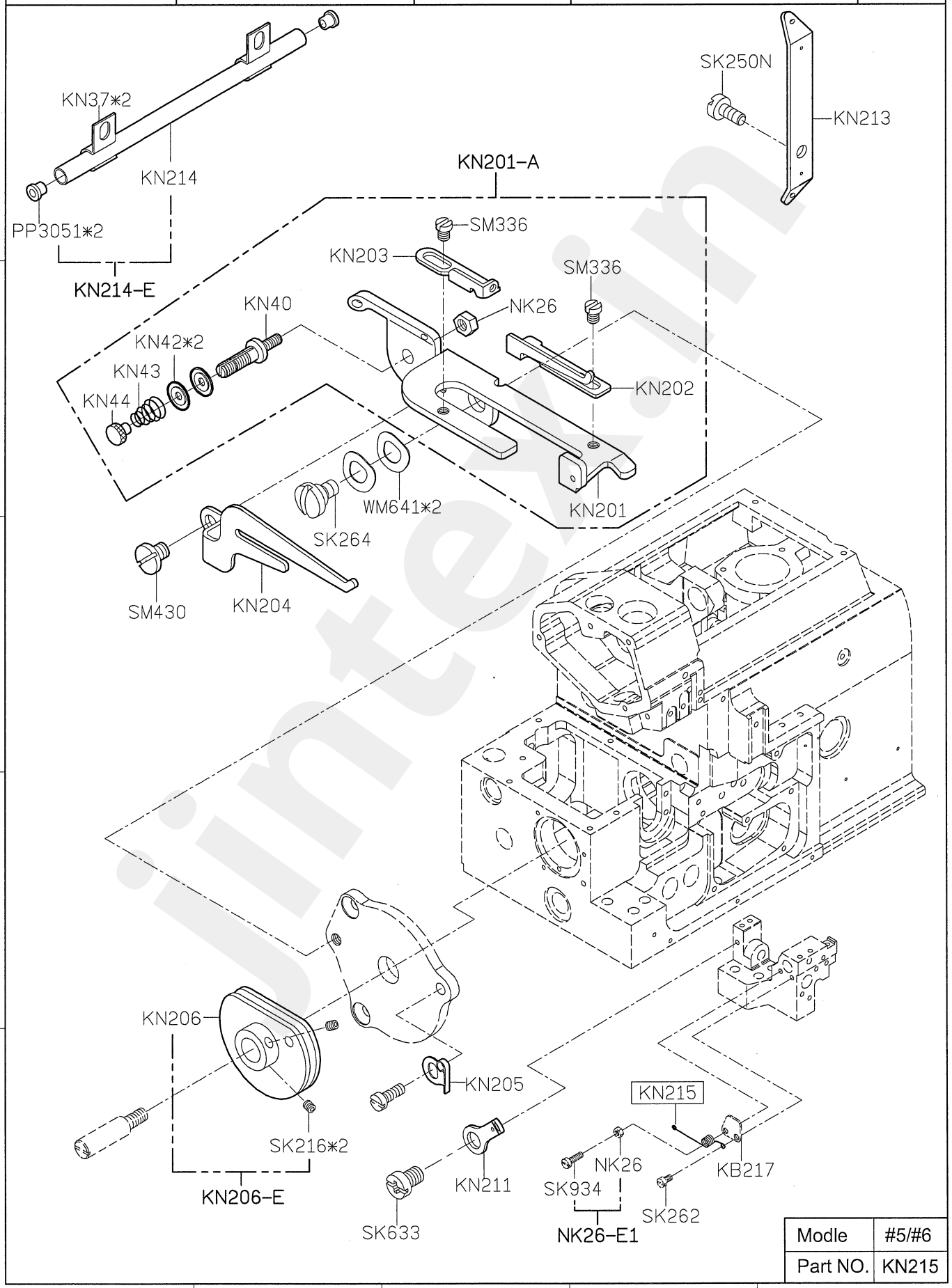

Modle	#5/#6
Part NO.	KN215

jintex.in

SIRUBA PARTS LIST	Series	Parts Group	Subclass / Remark	Page
	700LQ	KP		1/1
				Date
				2022/12/14

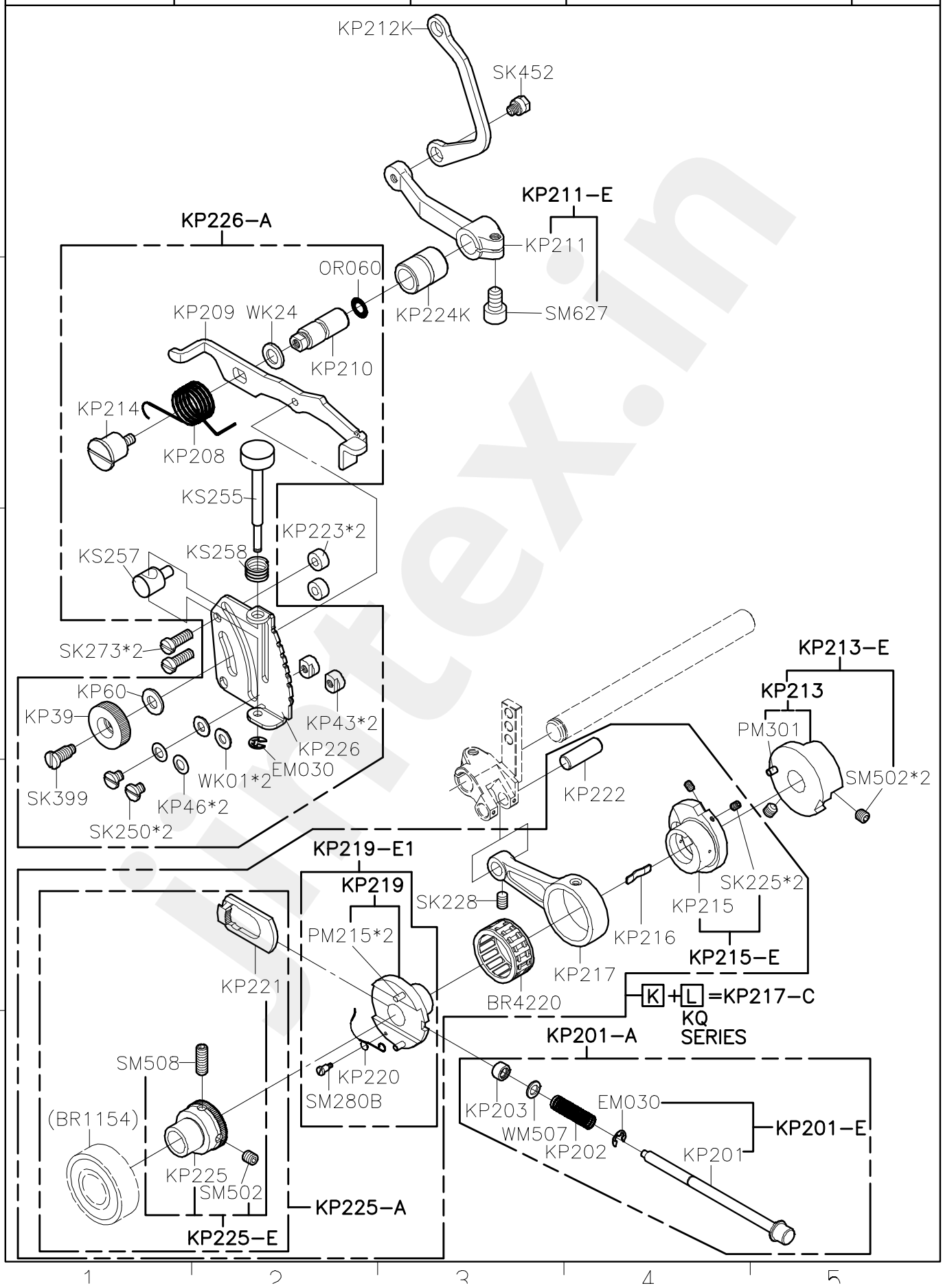

jintex.in

SIRUBA PARTS LIST	Series	Parts Group	Subclass / Remark	Page
	700LQ	KQ		1/1
				Date
				2022/08/09

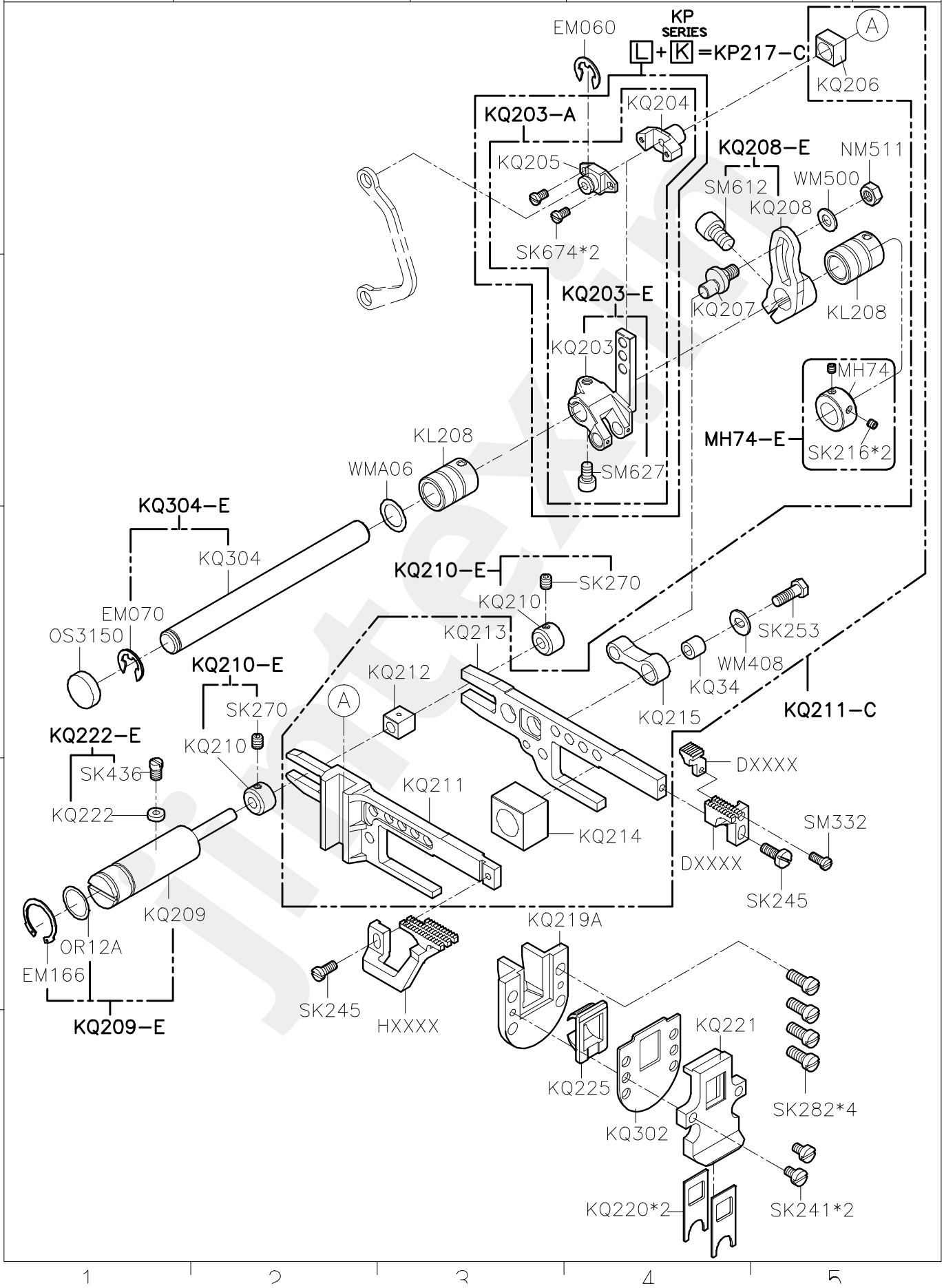

jintex.in

SIRUBA PARTS LIST	Series	Parts Group	Subclass / Remark	Page
	700LQ	KR		1/1
				Date
				2021/03/25

MODEL	#3/#4	#5/#6
PARTS NO	KR202	KR218
	KR202-E	KR218-E
	KR311-C	KR311-C1
	KR206K	KR221
	KR206K-A	KR221-A
	KR209	KR219
	KR209-A	KR219-A
	KR35	KR35
	KR212	

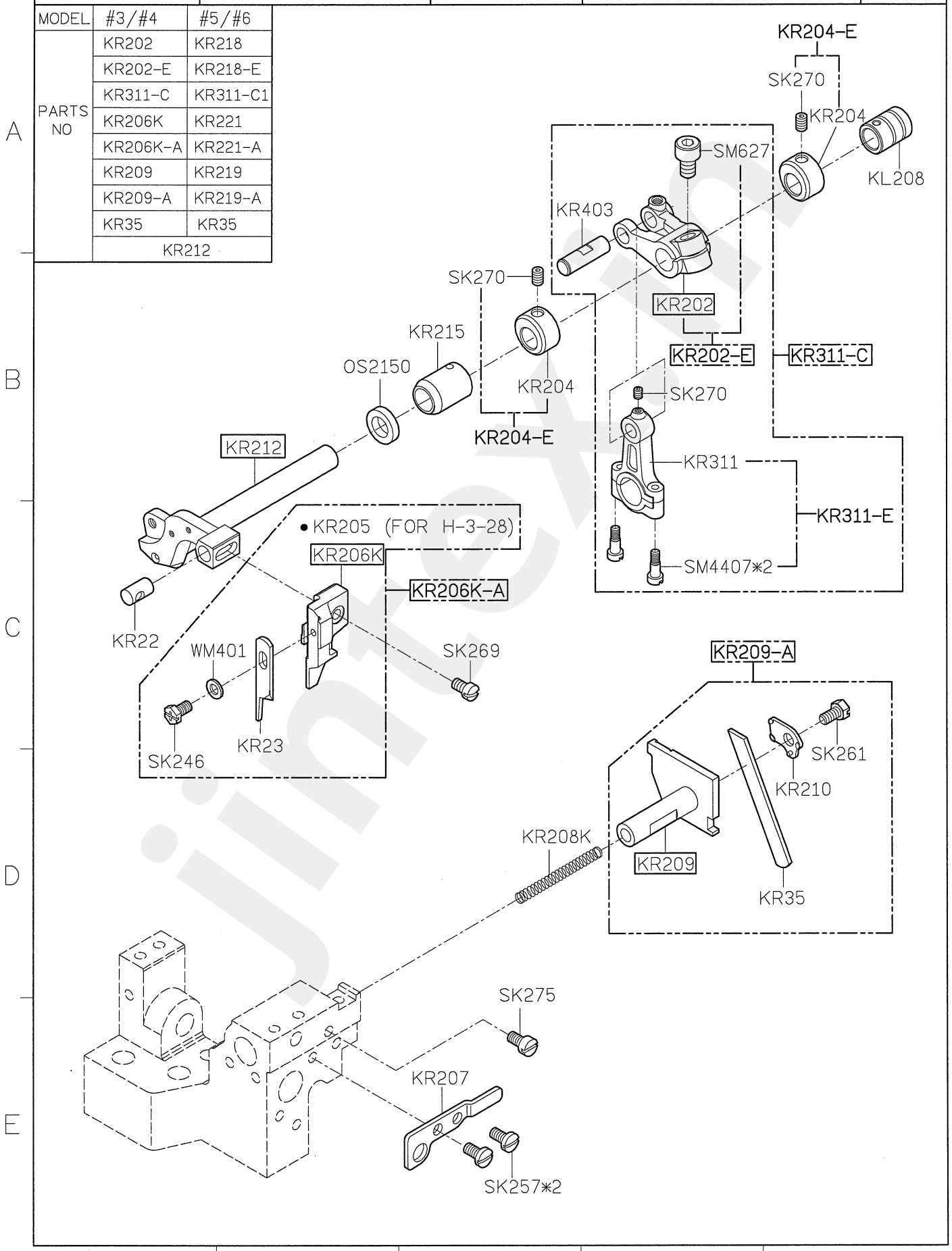

jintex.in

SIRUBA PARTS LIST	Series	Parts Group	Subclass / Remark	Page
	700LQ	KS		1/1
				Date
				2022/06/14

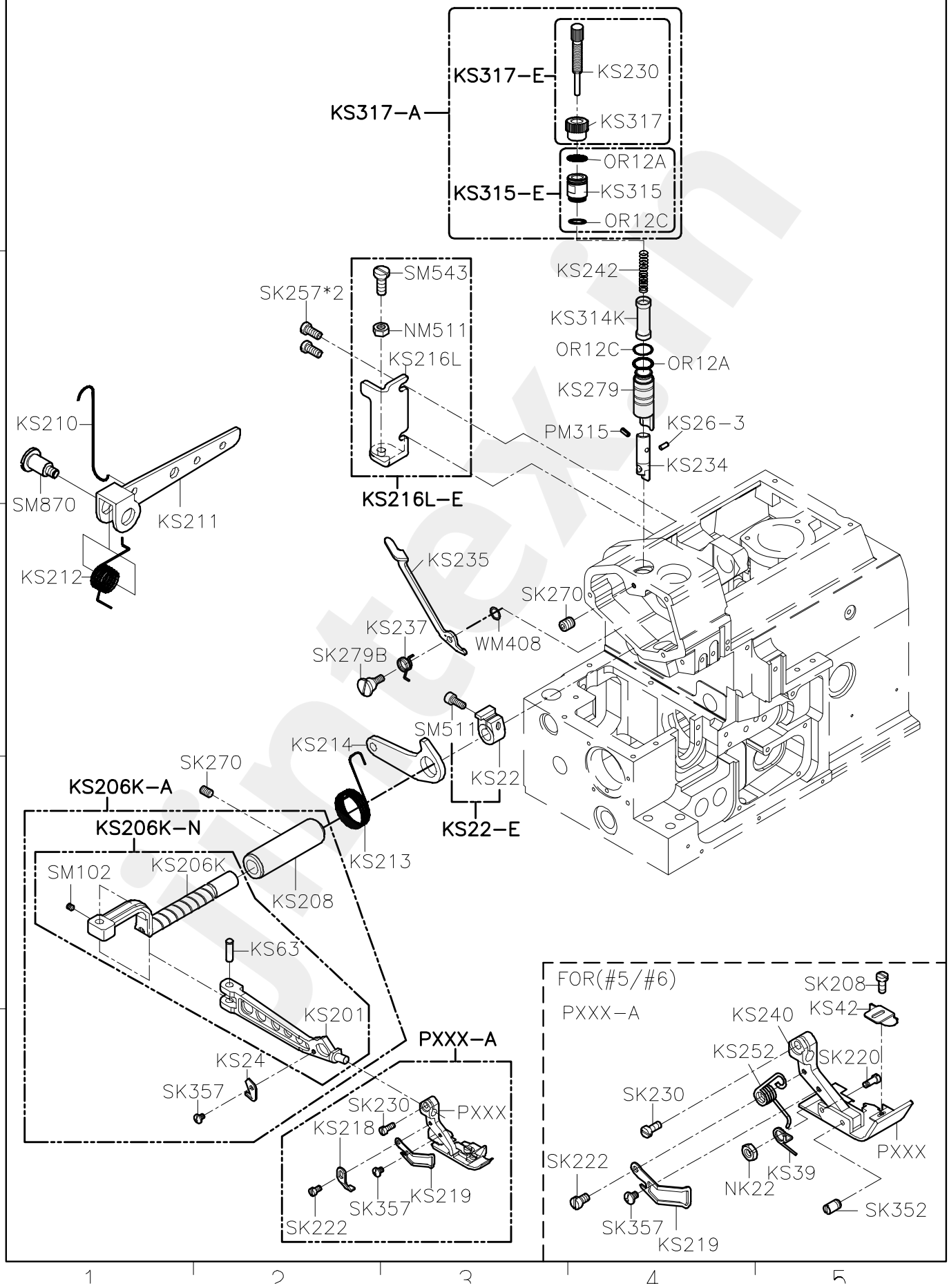

jintex.in

SiRUBA PARTS LIST	Series	Parts Group	Subclass / Remark	Page
	700LQ	KT		1/1
				Date
				2021/03/25

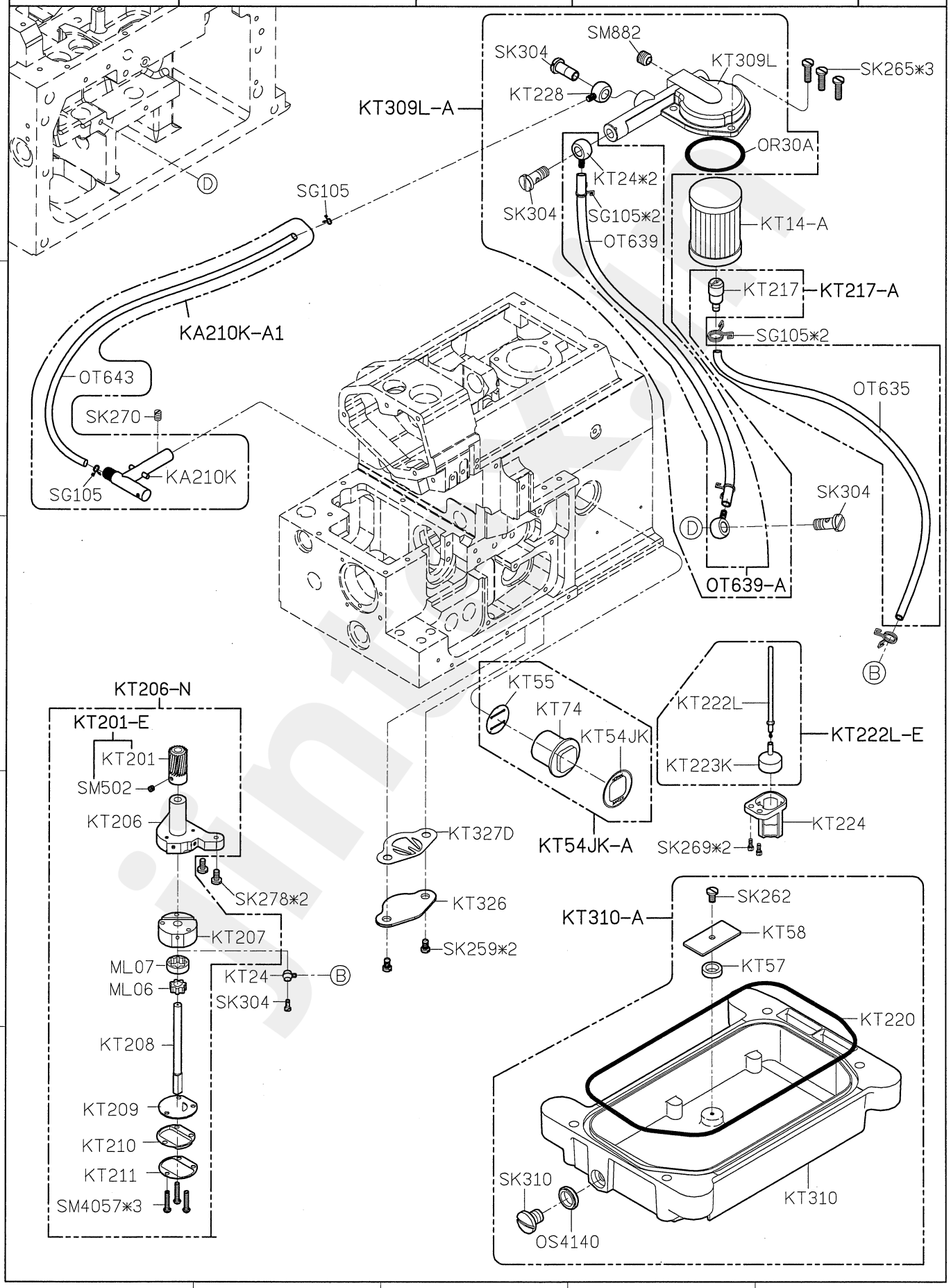

jintex.in

SiRUBA PARTS LIST	Series	Parts Group	Subclass / Remark	Page
	700LQ	KU		1/1
				Date
				2021/03/25

MODEL	#3/#4	#5/#6
PARTS NO	KU40	KU39
	KU220-4	KU220-5
	KU207	KU209
	KU206	KU211
	KU203-4	KU203-5
	SK277	SK437

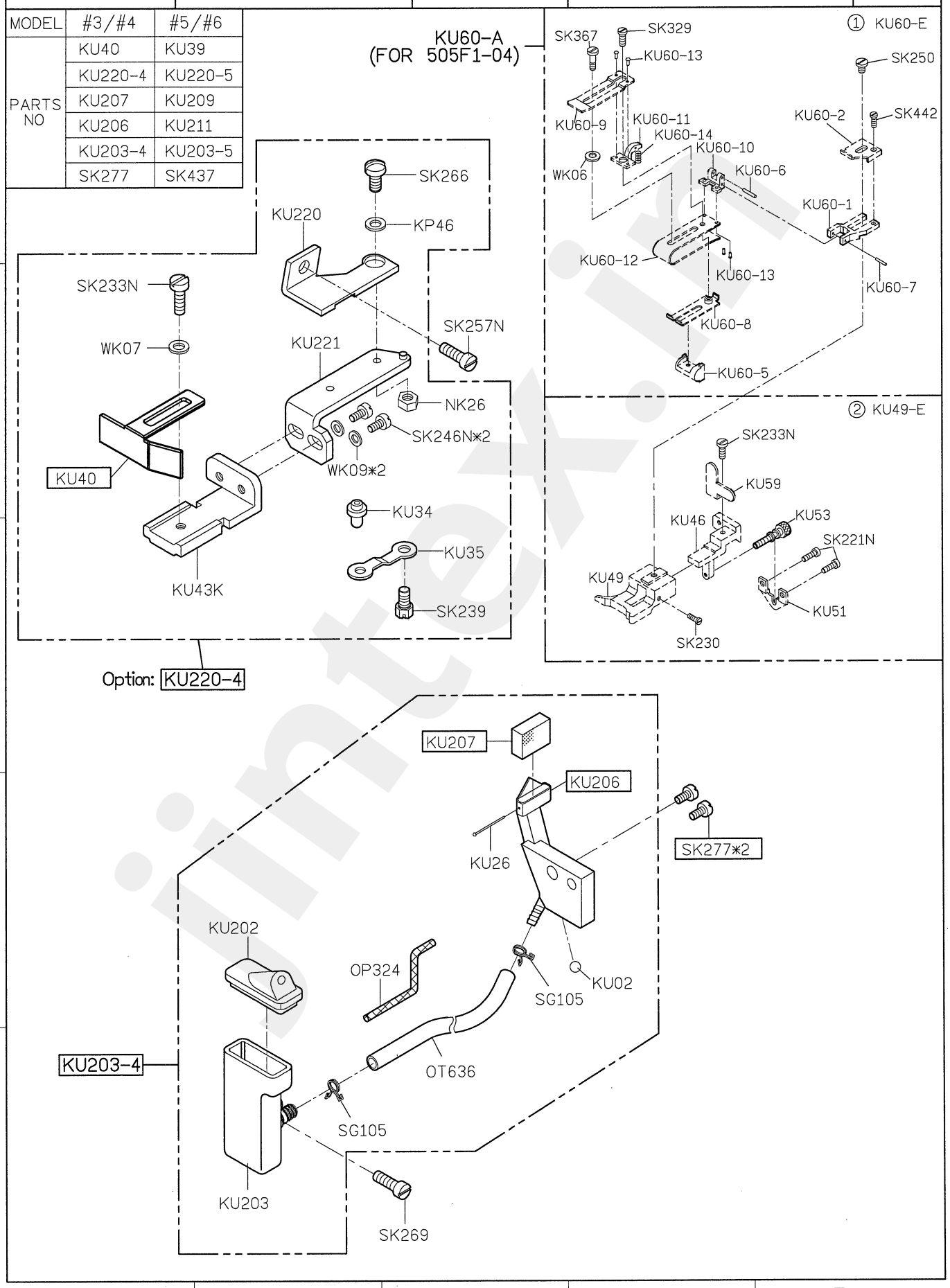

jintex.in

SIRUBA PARTS LIST	Series	Parts Group	Subclass / Remark	Page
	拷克 Overlock 含MO6800系列	KW		1/4
				Date 2022/07/11

KW40E-3

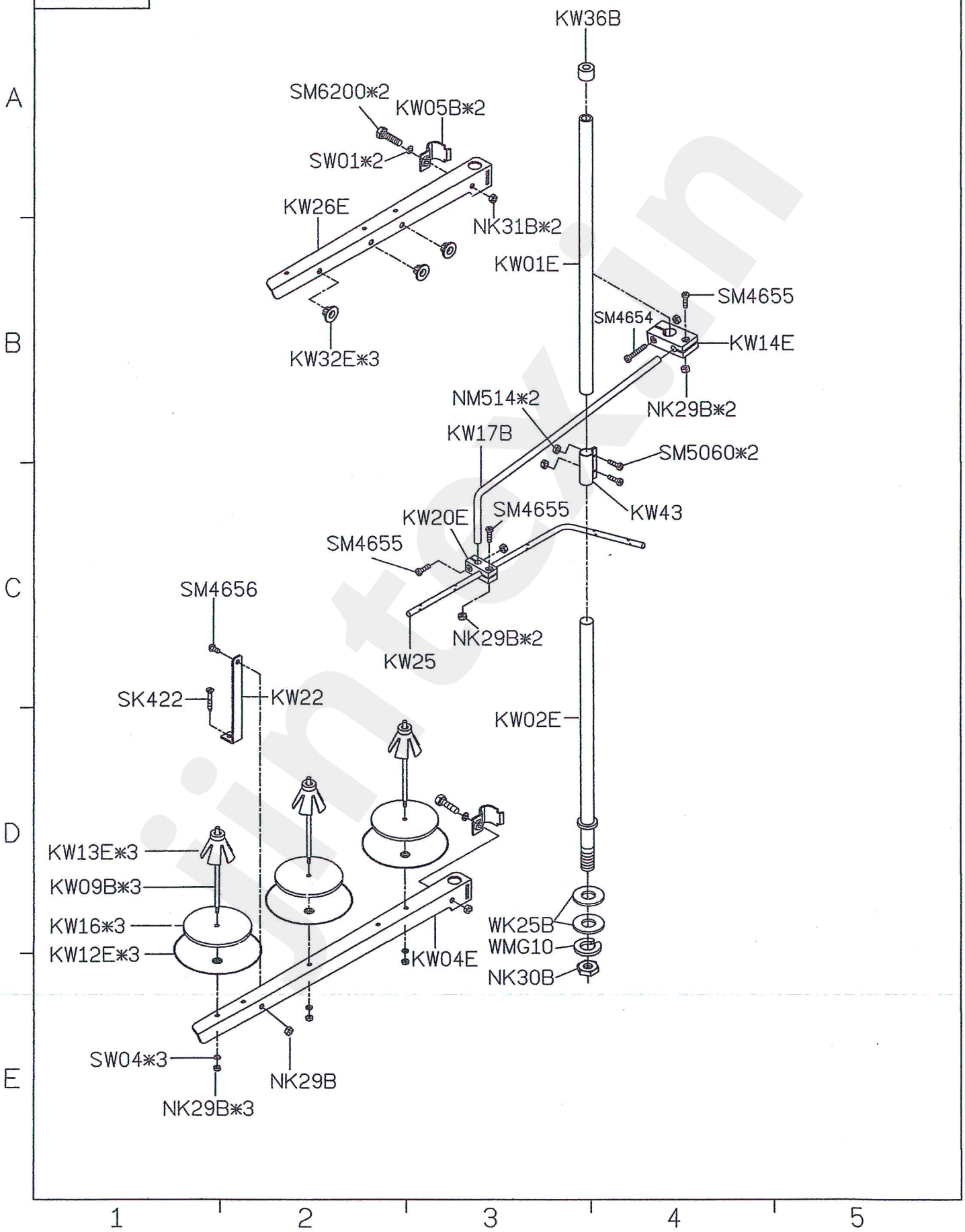

jintex.in

SiRUBA PARTS LIST	Series	Parts Group	Subclass / Remark	Page
	拷克 Overlock 含MO6800系列	KW		2/4
				Date
				2022/07/11

KW40E-4

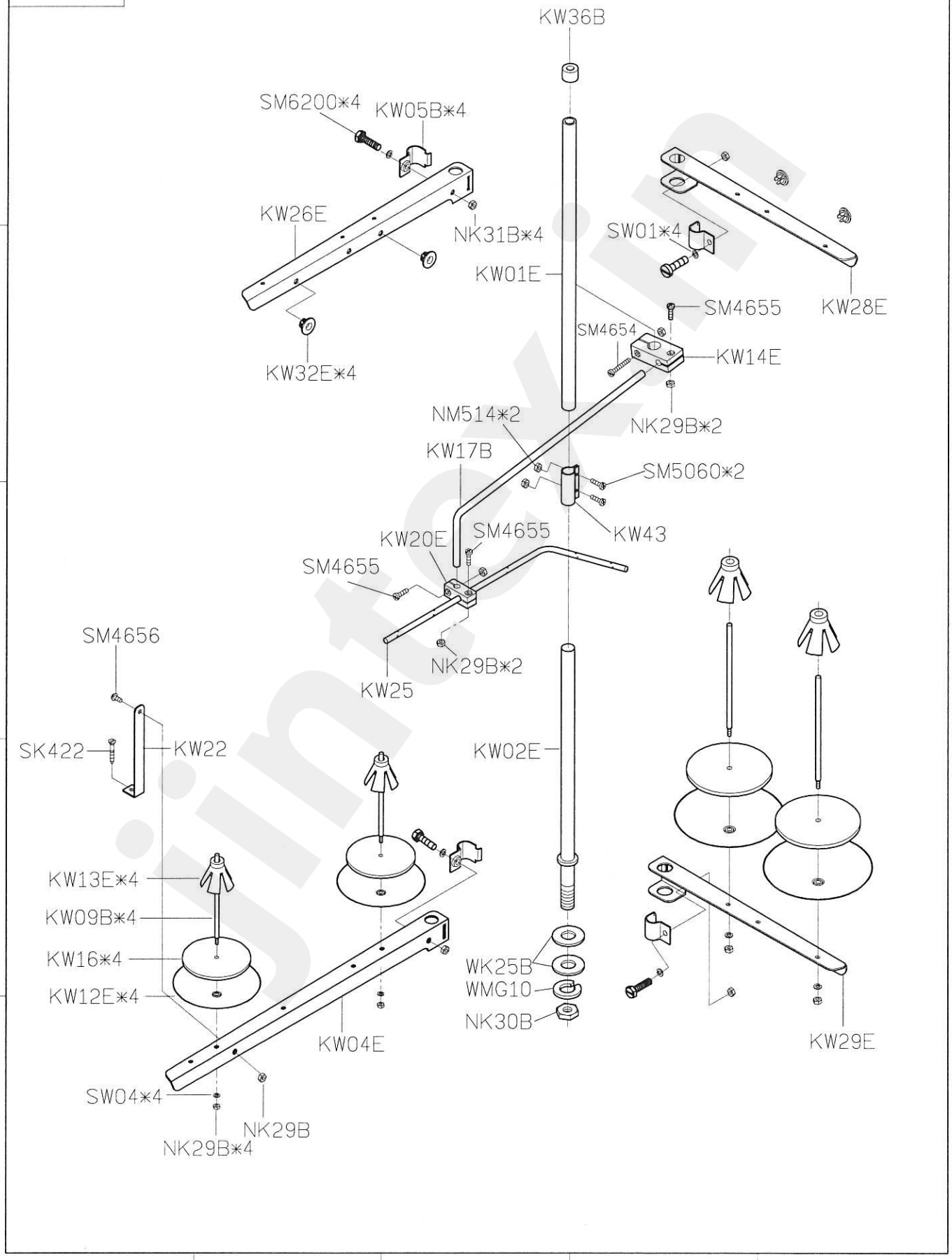

jintex.in

SIRUBA PARTS LIST	Series	Parts Group	Subclass / Remark	Page
	拷克 Overlock 含MO6800系列	KW		3/4
				Date 2022/07/11

KW40E-5

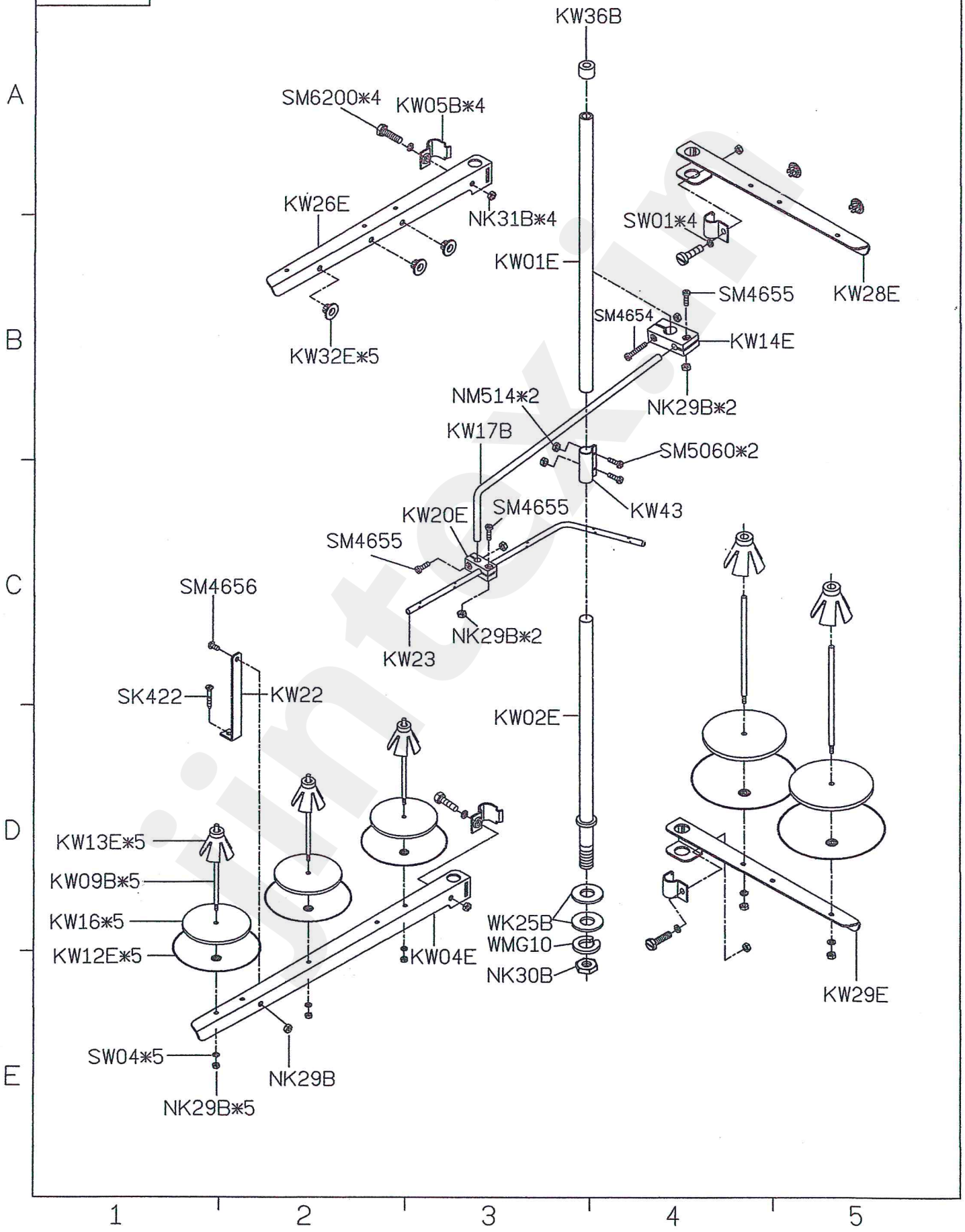

jintex.in

SIRUBA PARTS LIST	Series	Parts Group	Subclass / Remark	Page
	拷克 Overlock 含MO6800系列	KW		4/4
				Date 2022/07/11

KW40E-6

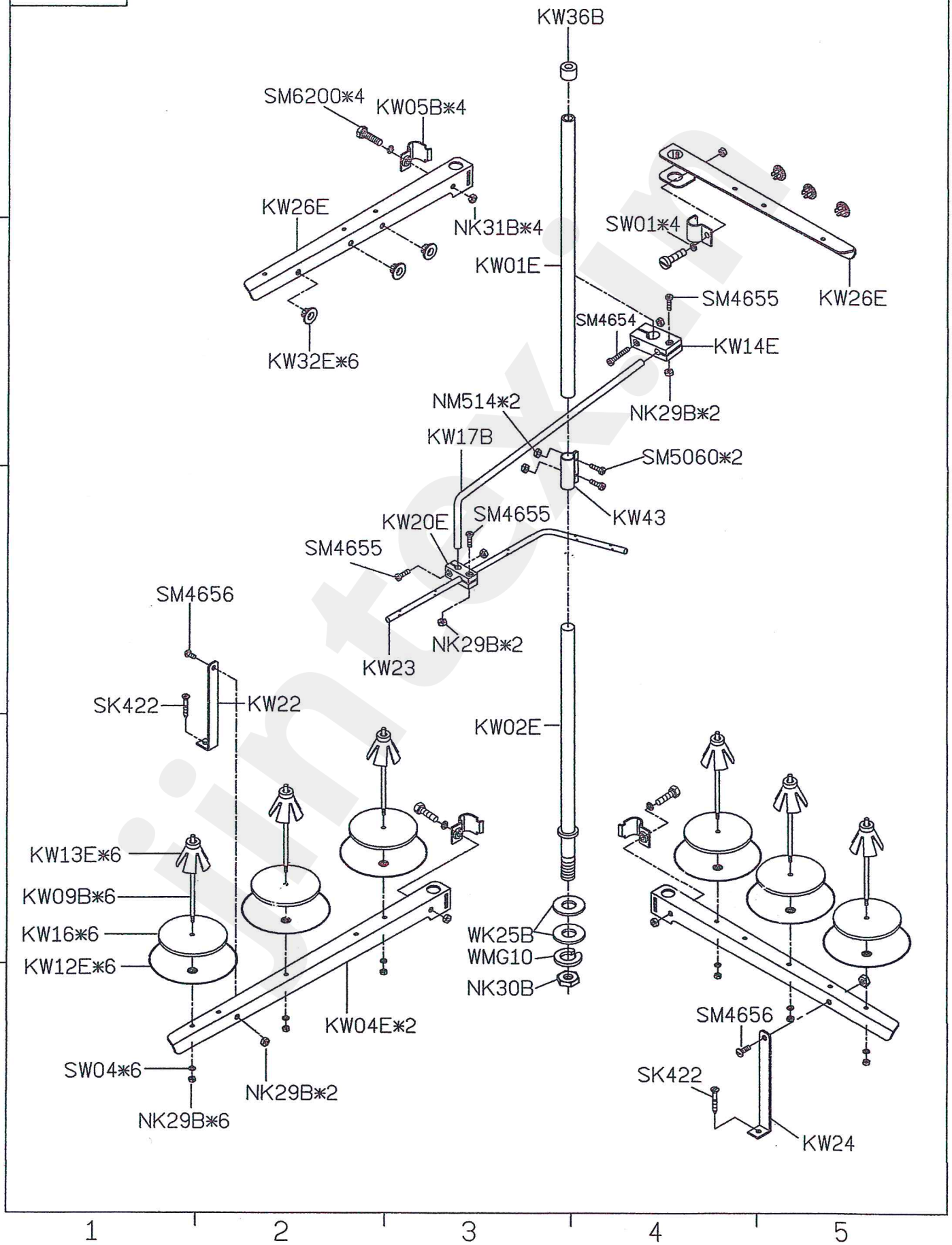

jintex.in

SIRUBA PARTS LIST	Series	Parts Group	Subclass Remark	Page
	700LQ	KX		1/1
				Date
				2021/03/25

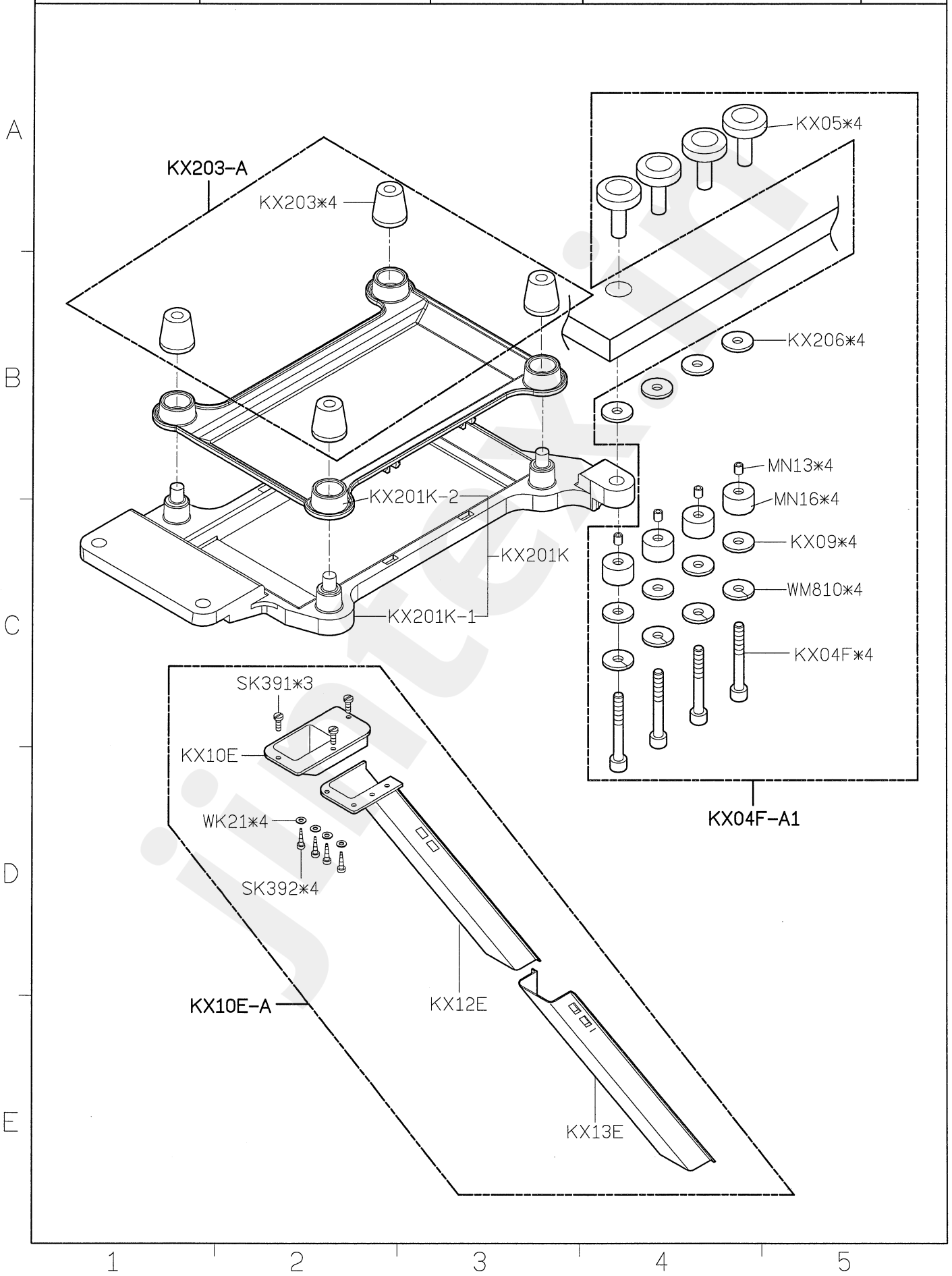

jintex.in

SiRUBA PARTS LIST	Series	Parts Group	Subclass Remark	Page
	700LQ	KY		1/1
				Date
				2022/06/23

KY01－1
防塵罩

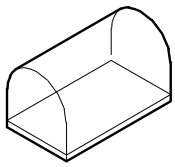

KY203－A
油罐

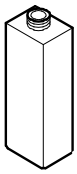

KY03
油壺

KY04
漏斗

SK216
螺絲

KY14
內六角螺絲起子

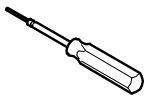

LY33
一字起子

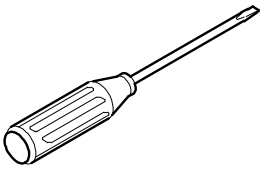

KY18
鑷子

KY30
針板紙

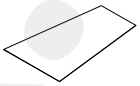

KY201JK
工具袋

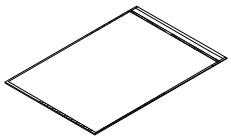

KR35
下刀片

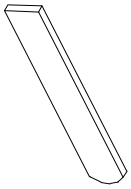

KT14－A
濾油器

KZ03
乾燥濟

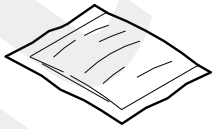

針*4
車針

KY21－A/MY21－A
鉤子／鍊條

jintex.in

SiRUBA PARTS LIST	Series	Parts Group	Subclass / Remark	Page
	700LQ	KZ		1/1
				Date
				2022/06/10

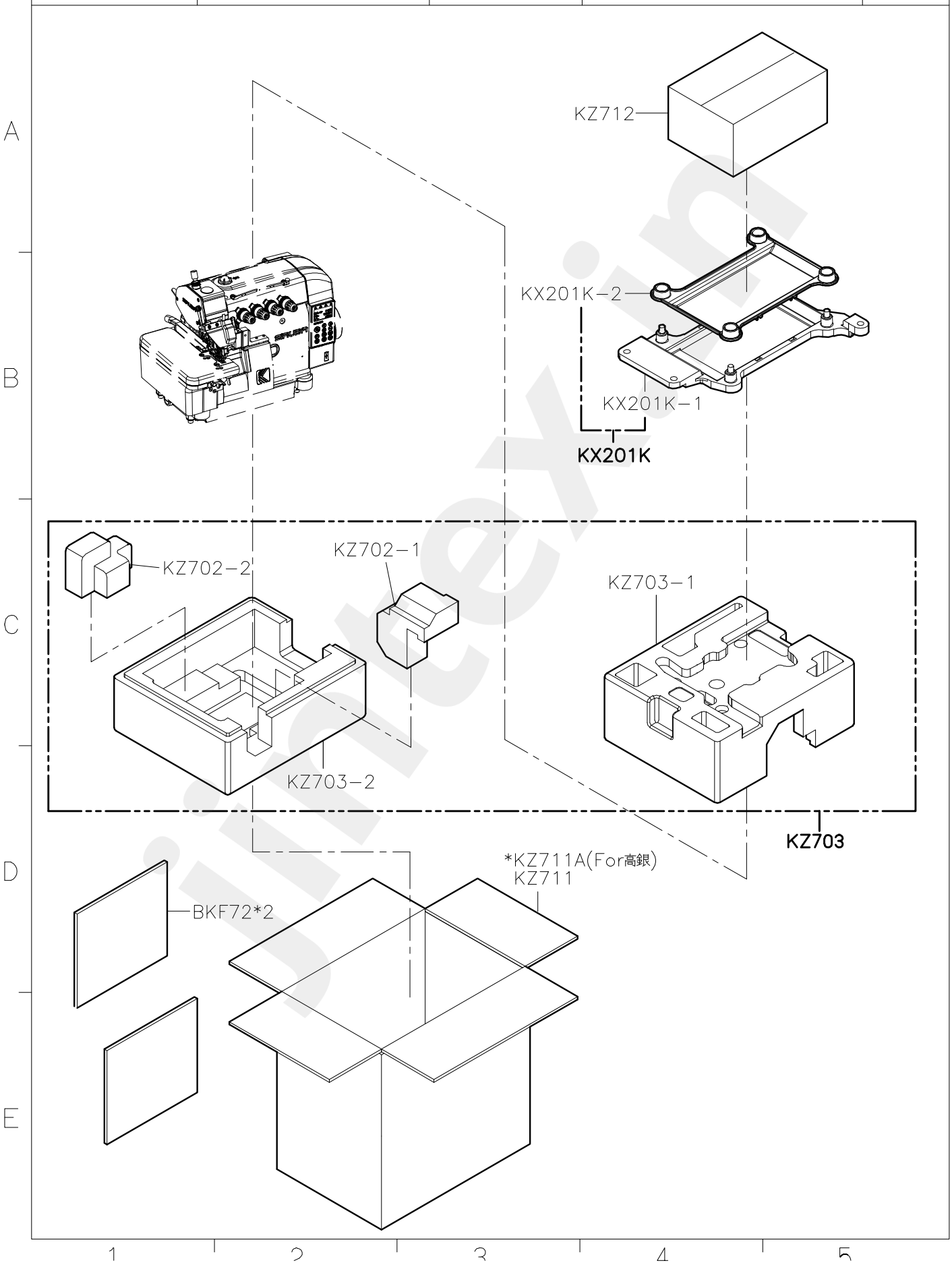

jintex.in

SiRUBA TABLE CUT - OUT	Series	Item Code	Subclass Remark	Mounting
	700LQ 700LQT	700LQ-T		Semi-submerged
				Date
				2023/08/18

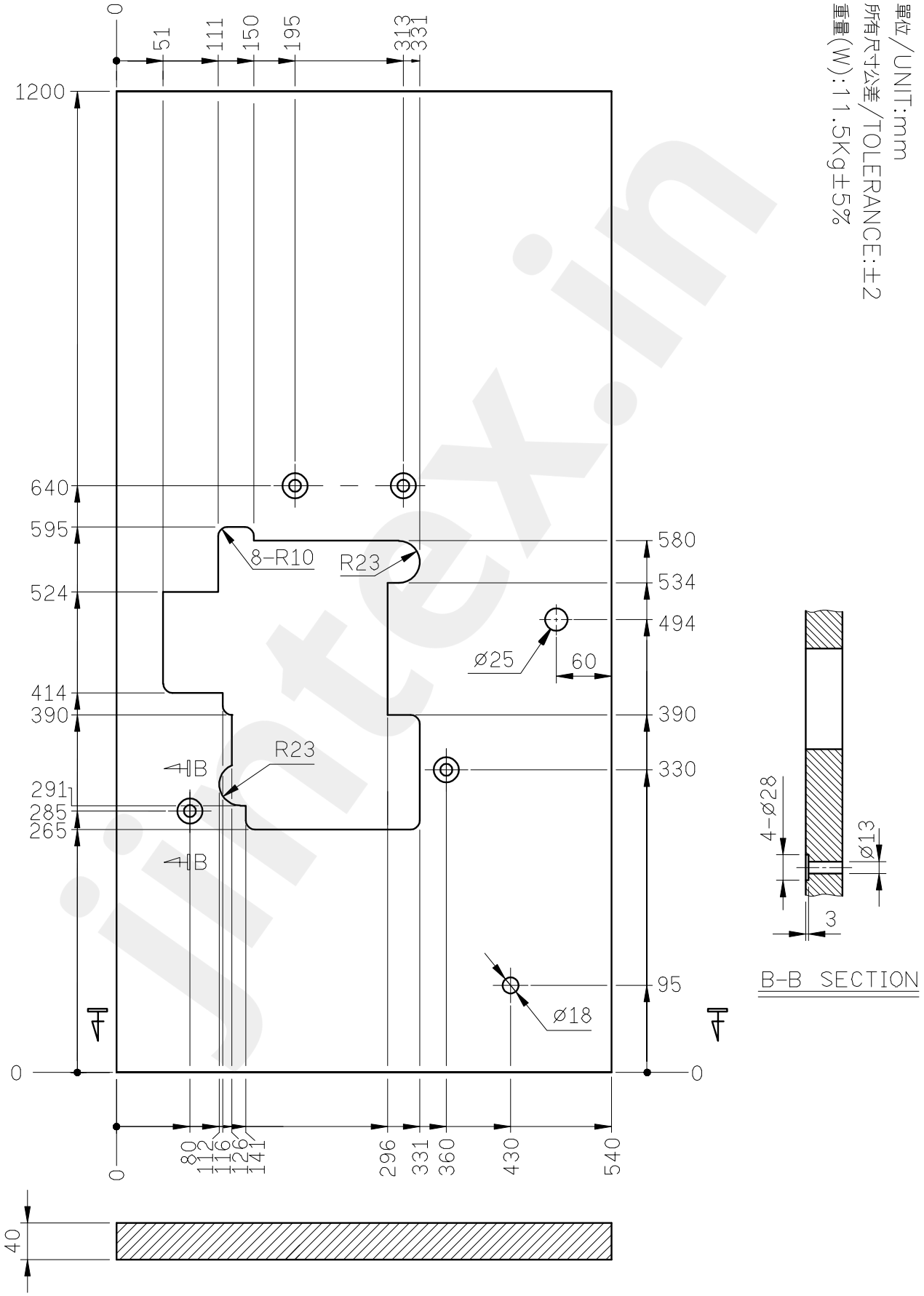

jintex.in

SIRUBA TABLE CUT - OUT	Series	Item Code	Subclass Remark	Mounting
	700LQ 700LQT	700LQ-T2	需配TBK-1 (包含TB201) Collocate With TBK-1 (Including TB201)	Fully-submerged
				Date
				2023/08/23

單位/UNIT:mm
所有尺寸公差/TOLERANCE:±2
重量(W):12.4kg±5%

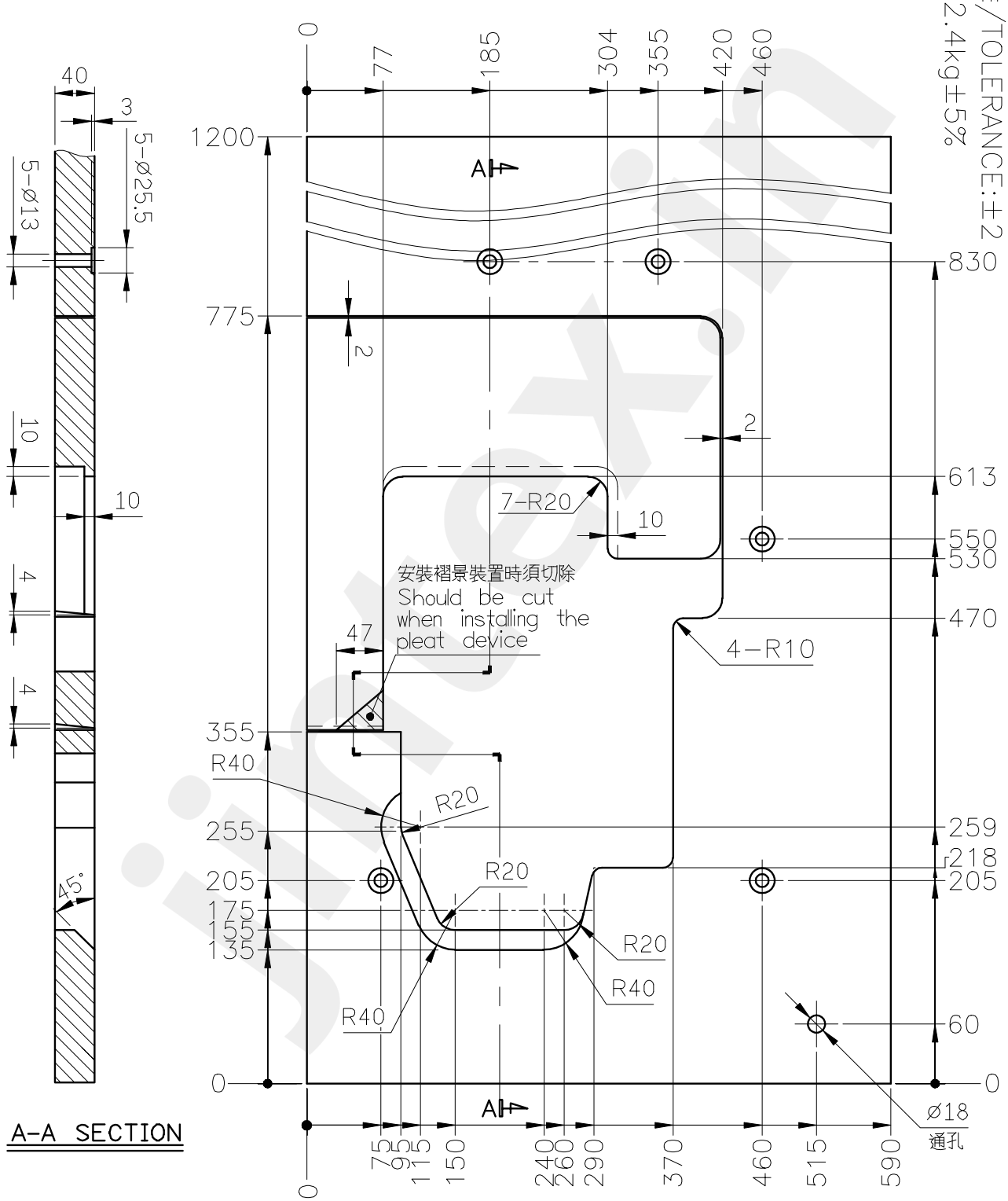

jintex.in

SiRUBA TABLE CUT - OUT	Series	Item Code	Subclass Remark	Mounting
	700K/988 700L	TB201		Fully-submerged Fixed Table
				Date
				2018/08/28

單位/UNIT:mm
所有尺寸公差/DIFFERENCE:±2
重量(W):4.25kg±5%
全封邊灰格紋光塑面台板/Plastic Table With All Sides Sealed With Gray Plaid

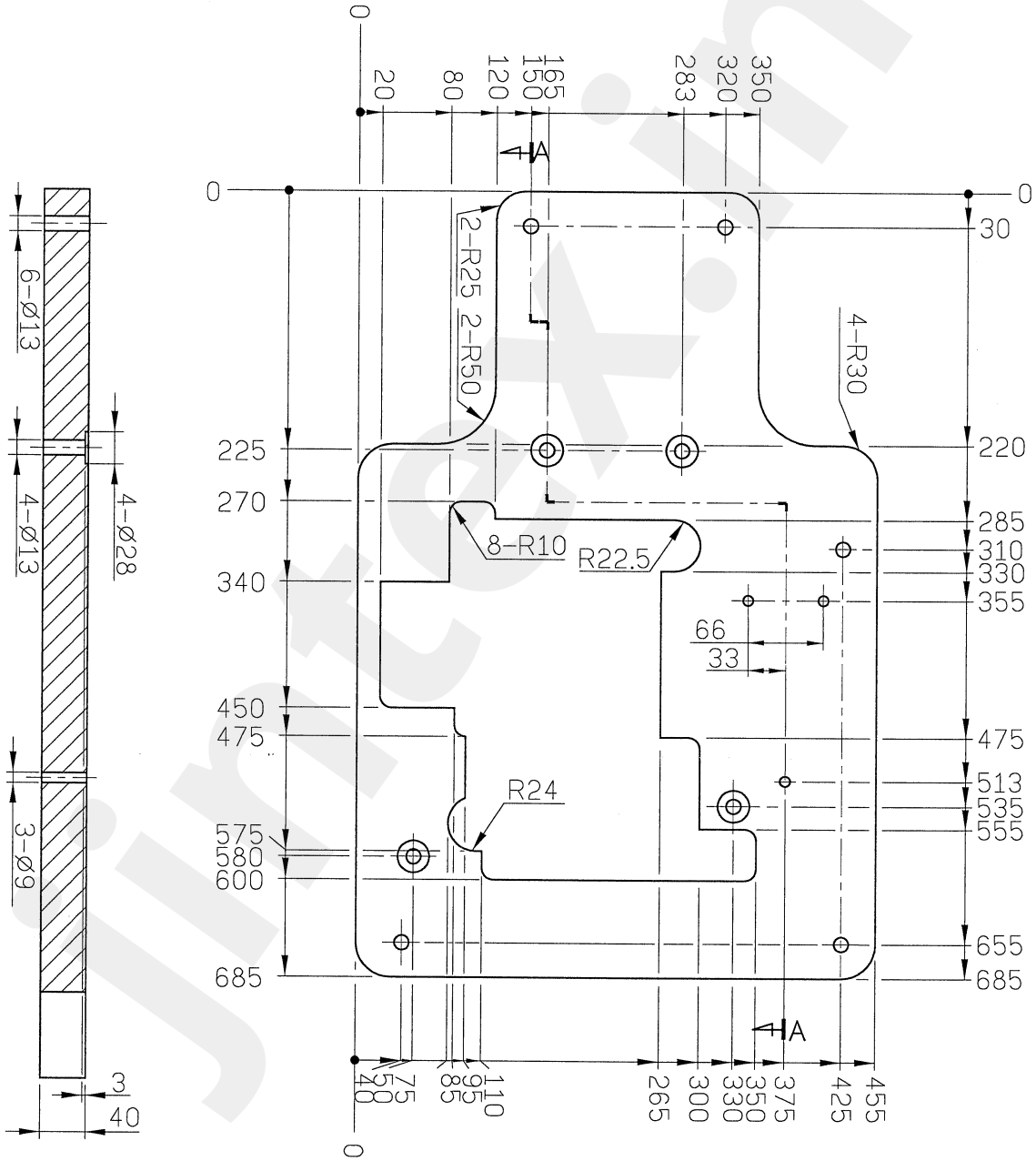

A-A SECTION

jintex.in