JINTEX

Sewing Machine Spare Parts

# Typical GN2000-3

Sewing Machine Part Book

74 pages

jintex.in | enquiry@jintex.in | +91 96321 55211

33 Park Road, Akkipet Circle, Bangalore

Since 1898

CONSEW®

CONSOLIDATED SEWING MACHINE CORP.

INDUSTRIAL SEWING & CUTTING EQUIPMENT

# OPERATING INSTRUCTIONS & PARTS LIST

# CM793
# CM794
# CM795

Since 1898

CONSEW®

CONSOLIDATED SEWING MACHINE CORP.

INDUSTRIAL SEWING & CUTTING EQUIPMENT

400 VETERANS BLVD, CARLSTADT, NJ 07072

jintex.in

jintex.in

# INTRODUCTION

Thank you very much for purchasing 2000 Series sewing machine.

This instruction manual describes daily routine maintenance and safety precautions to keep the machine in the best possible conditions.

Please study this manual very carefully before operating the machine.

## OBSERVE THESE SAFETY PRECAUTIONS

Though 2000 series takes the utmost care to produce safe sewing machines and devices, operators should follow these basic safety rules.

- To prevent accidents, do not remove safety devices or parts while operating the machine.

- Do not leave tools or other unnecessary objects on the machine table while operating the machine.

- Before maintenance, adjusting, cleaning, threading or replacing the needle, and to prevent accidents, be sure the power is turned off. Check that the machine will not operate when the pedal is pressed.

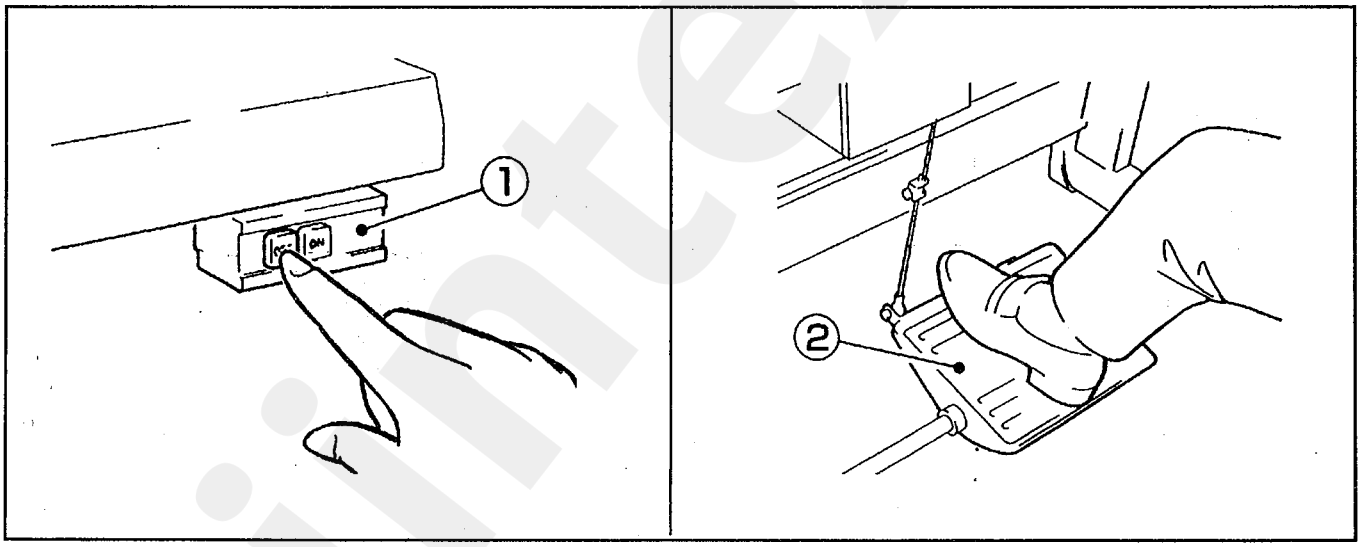


Note
In case a clutch type motor is used, it will keep on rotating by inertia after turning off power supply ①. If the machine pedal ② is stepped on inadvertently, it is dangerous because the machine will move unexpectedly. Keep on stepping on the machine pedal ② until the machine comes to a stop after turning off the power supply ①.

- Turn the power off before leaving the machine table.

- In the event of a power failure, be sure to turn the machine off.

- Check that the machine is securely grounded.



jintex.in

# CONTENTS

## BEFORE OPERATING


Schematic diagram of the machine table 3

Installing the machine head 4

The machine speed and the turning direction 4

Lubrication 5

Manual lubrication 5

Filling the HR device with silicon oil 6

Threading 6


## TEST SEWING


Adjusting the presser foot pressure 7

Adjusting the diff. feed retio 8

Adjusting the stitch length 8

Adjusting the thread tension 9


## MAINTENANCE DURING USE


Cleaning the machine 9

Replacing the needle 10

Checking the oil circulation 10

Replacing the oil 11

Replacing the lower knife 11 – 12

Adjustment dimensions 13

Standard needle 13




jintex.in

# Schematic diagram of the machine table

Cut the table referring to the diagram .

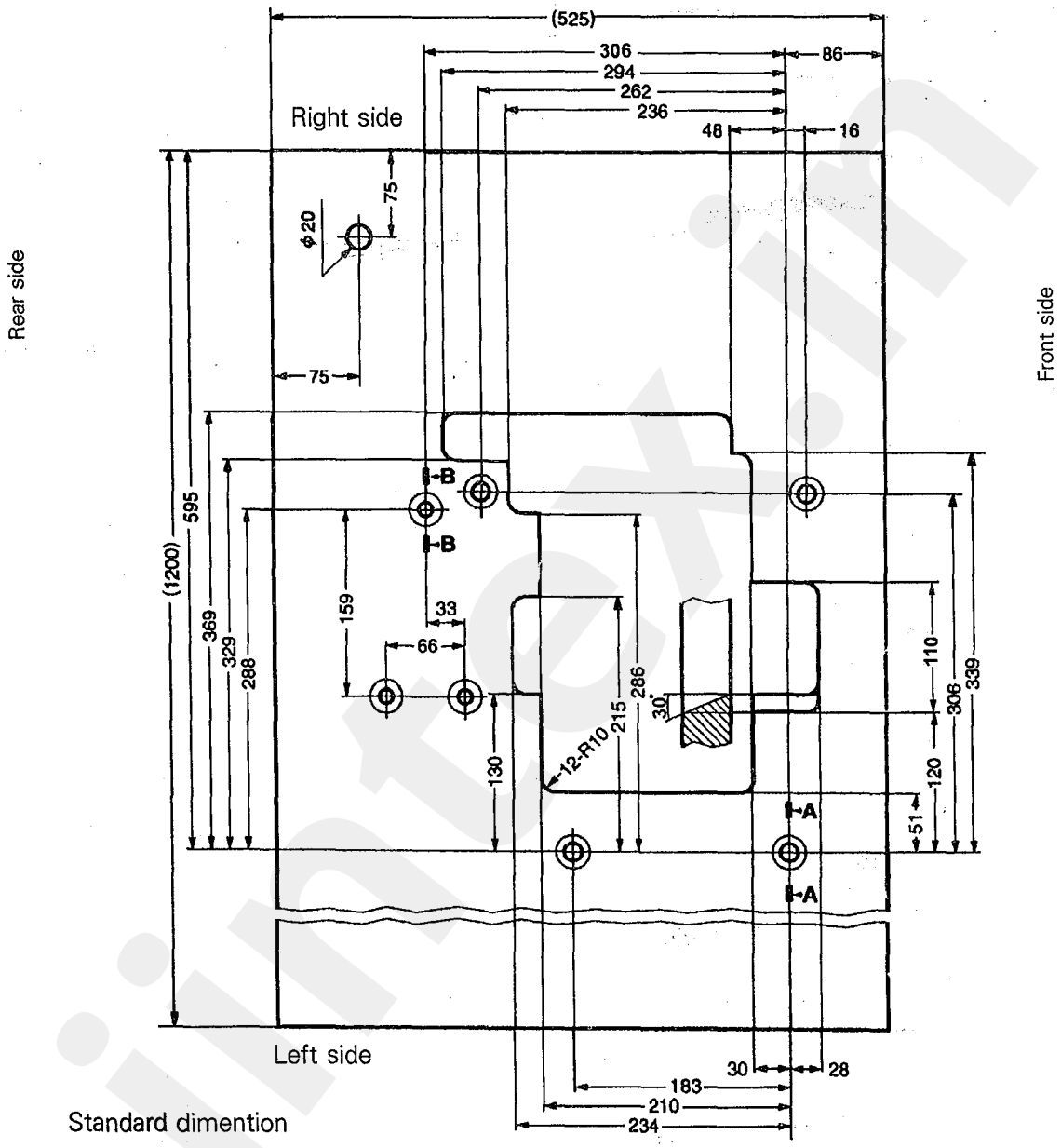


Standard dimention

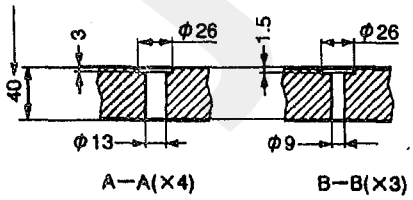




jintex.in

BEFORE OPERATING

## Instaling the machine head

1. Mount the machine head on the mahcine rest board.
2. Adjust the tension of the belt so that it can be about 2cm bent inward when you press the middle of it.
Adjust the height of the motor to do this.
3. Install the belt cover referring to the Figure.

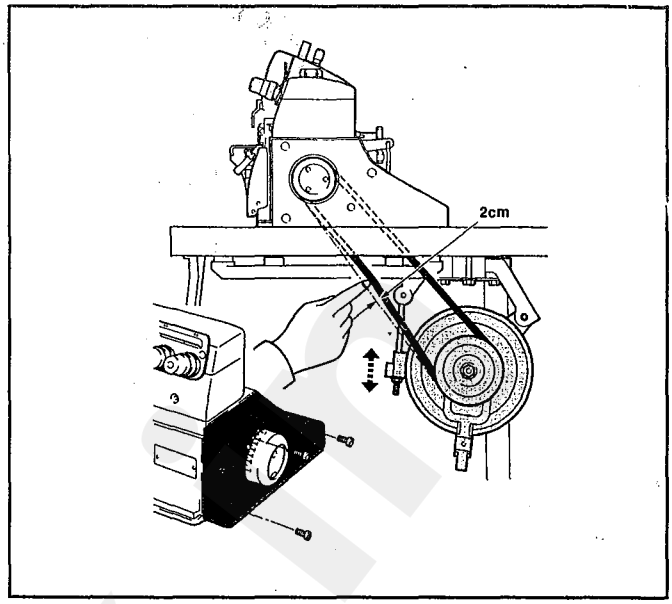


BEFORE OPERATING

## The machine speed and turning direction

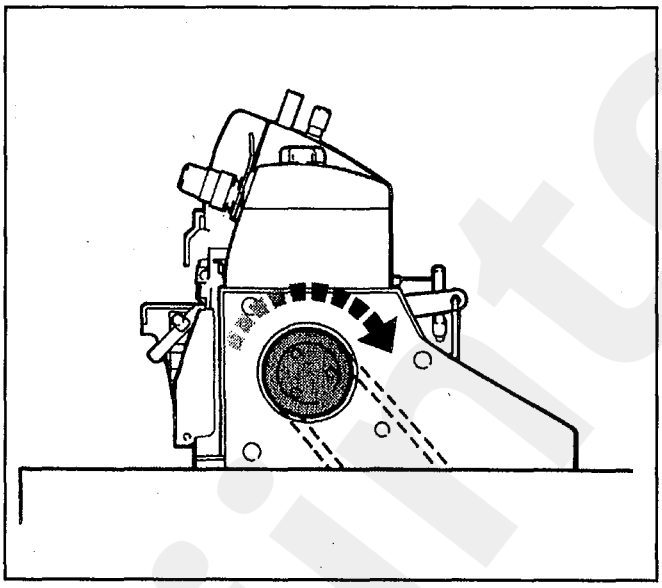

The machine rotates clockwise when seen from the machine pully side.

Make sure your machine type and run it not exceeding the maximum speed as listed in the table

| Modle | (r. p. m)<br>Sewing speed(max) |
|---|---|
| 2000 – 3<br>2000 – 3B<br>2000 – 3E | 7000 |
| 2000 – 4<br>2000 – 4M | 6500 |
| 2000 – 4H | 6000 |
| 2000 – 5L<br>2000 – 5<br>2000 – 5(5 × 5) | 6500 |
| 2000 – 5H | 5500 |



jintex.in

## Lubrication

After filling the oil pan, the top of oil indicator should lie between (H) and (L) lines.
Add oil, when it reaches or goes below (L).
Note: Use our company recommended oil

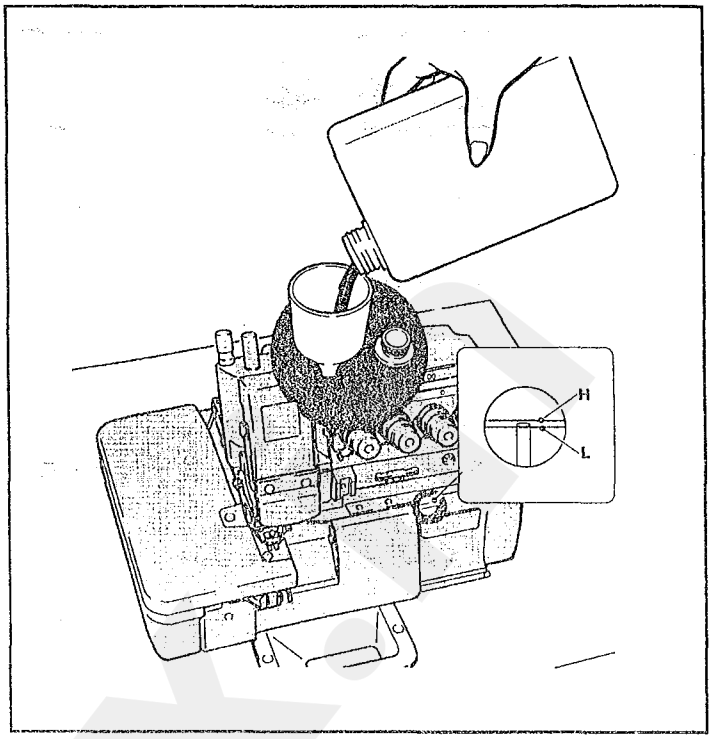




## Manual lublication

Apply 2 or 3 drops of oil by hand when the machine is used for the first time or has been left unused for some time.
Note: Use our company recommended oil

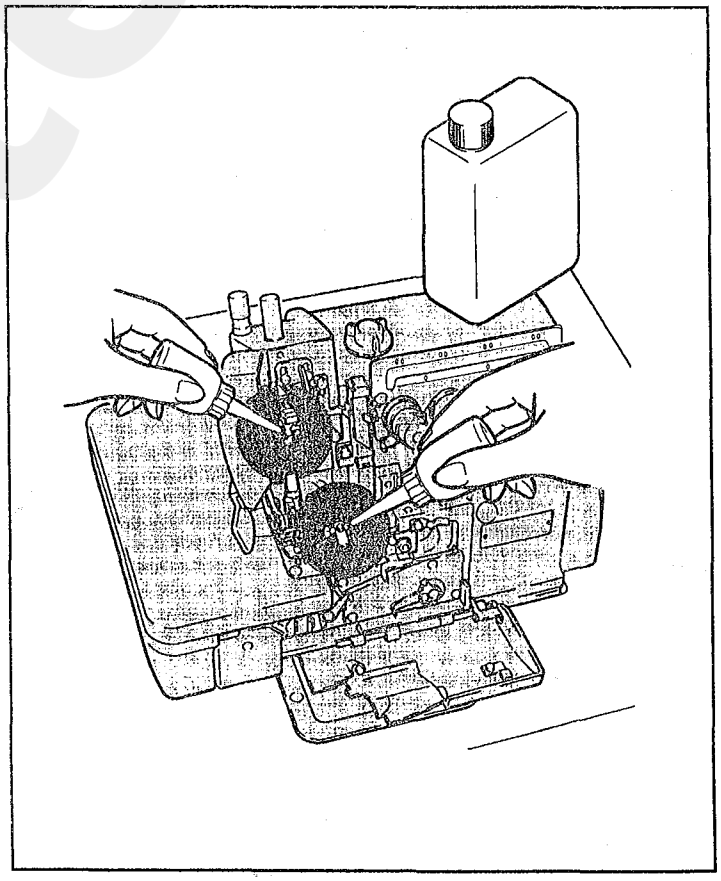



jintex.in

BEFORE OPERATING

## Filling the HR device with silicon oil

Fill the HR device with oil before it is too low in order to prevent needle thread breakage and fabric damage.

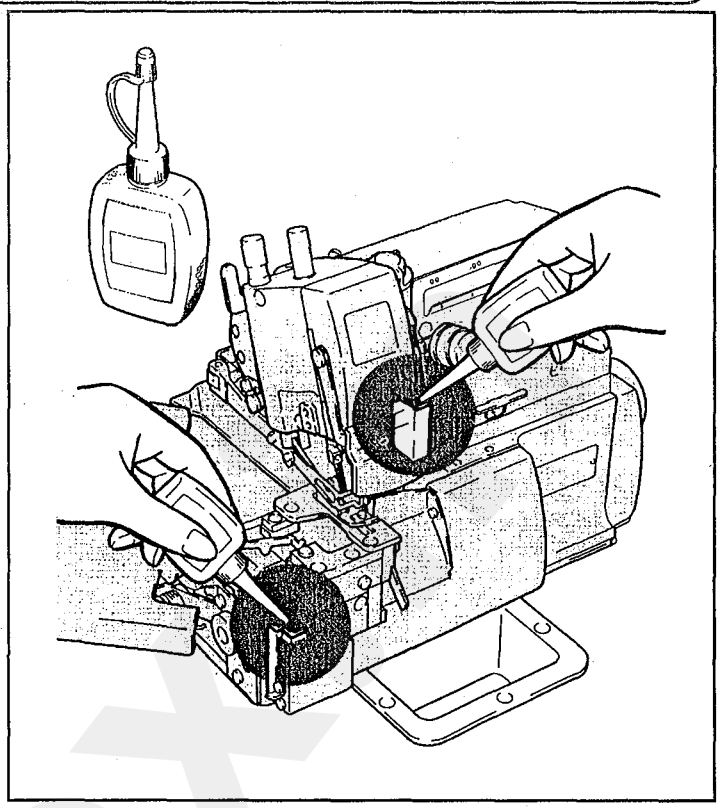

BEFORE OPERATING

## Threading

Open three covers.
Swing the presser foot aside.

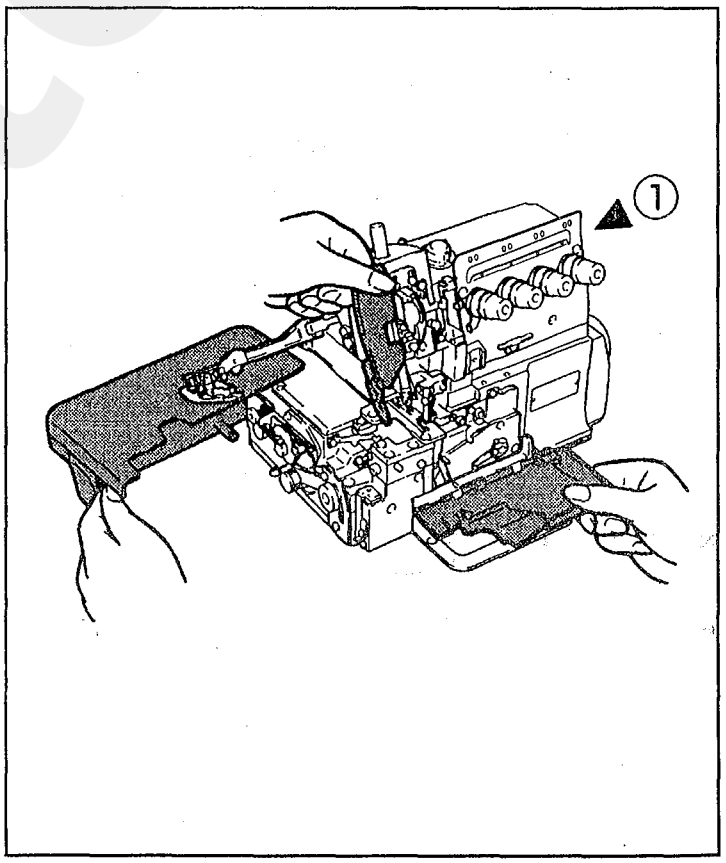




jintex.in

# Threading

Knot the preset thread and the thread being used together to thread the machine.

②

## Needle thread

Trim the knots off neatly before passing through the eye of the needle to rethread.

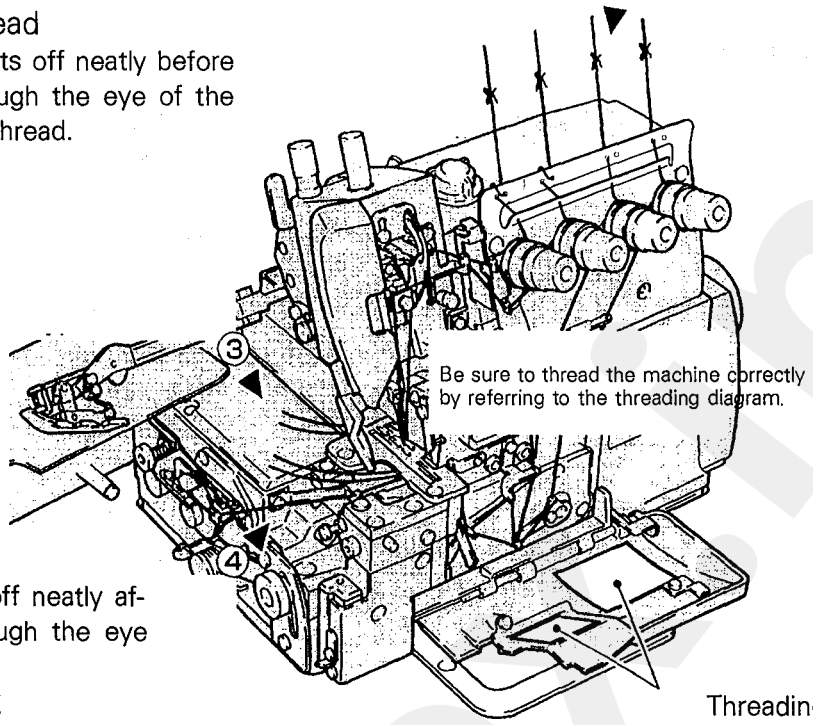


Be sure to thread the machine correctly by referring to the threading diagram.

## Looper thread

Trim the knots off neatly after passing through the eye of the looper.

Threading diagram



# Adjusting the presser foot pressure

Turn adjusting screw to adjust the presser foot pressure. It should be as light as possible, yet be sufficient to obtain the proper stitch formation.

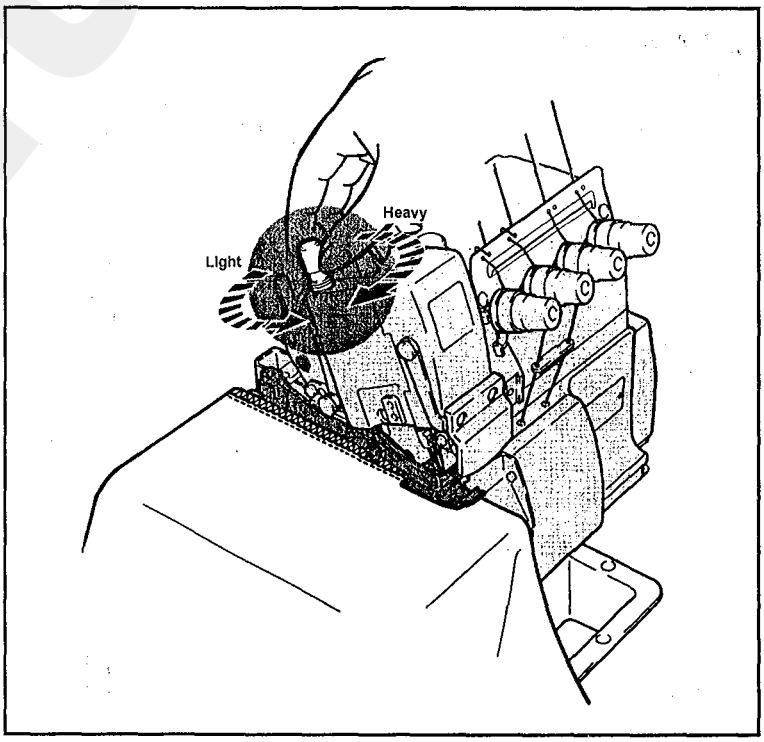




jintex.in

TEST SEWING

## Adjusting the diff. feed ratio

Loosen the nut and move the lever up and down to obtain the correct differential feed ratio.
Tighten the nut after positioning the lever as desired.

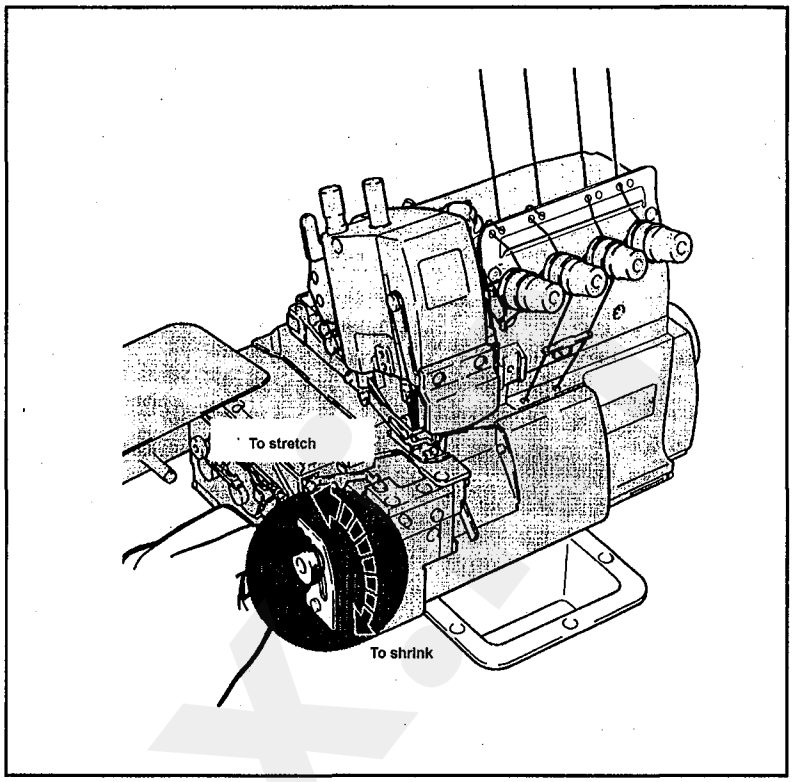


TEST SEWING

## Adjusting the stitch rength

1. While pressing the push button, turn the handwheel to seek the position at which the push button goes further into the depth.
2. Then, keeping the push button pressed, turn the handwheel and set the desired scale to the aligning mark.

Note: Stitch length adjustment must only be made after the differential feed ratio has been changed.

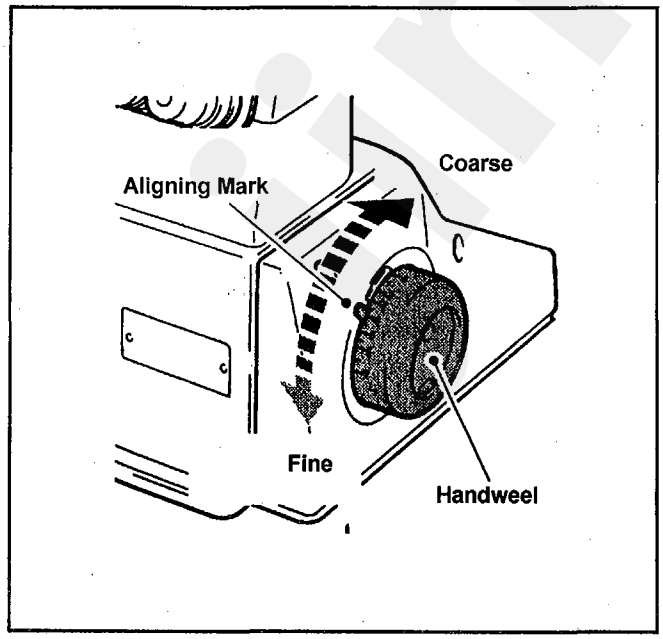


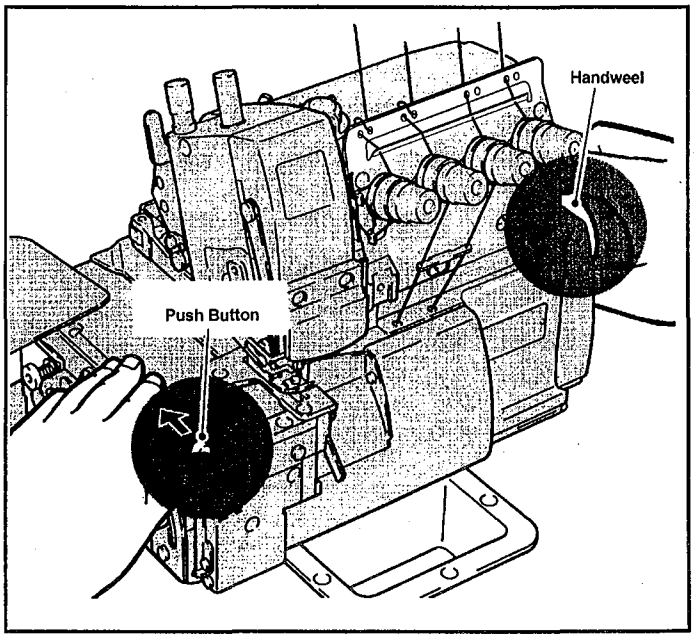




jintex.in

TEST SEWING

## Adjusting the thread tension

Make tension adjustments with the needle thread knot ①, the upper looper knob ②, and the lower looper knob ③.

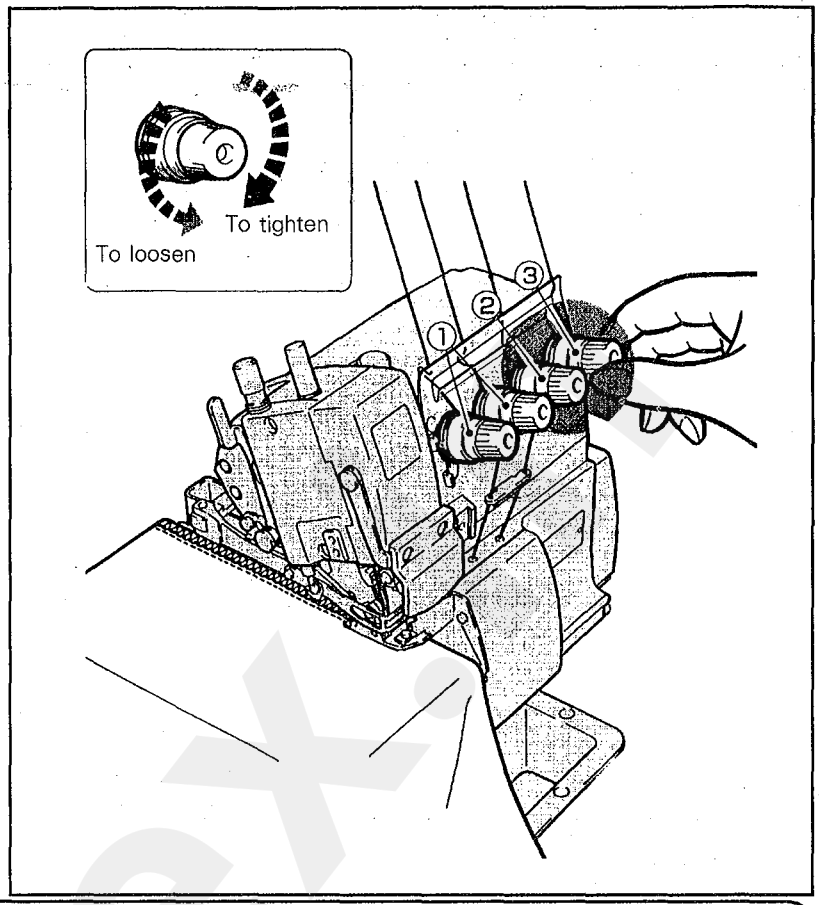


MAINTENANCE DURING USE

## Cleaning the machine

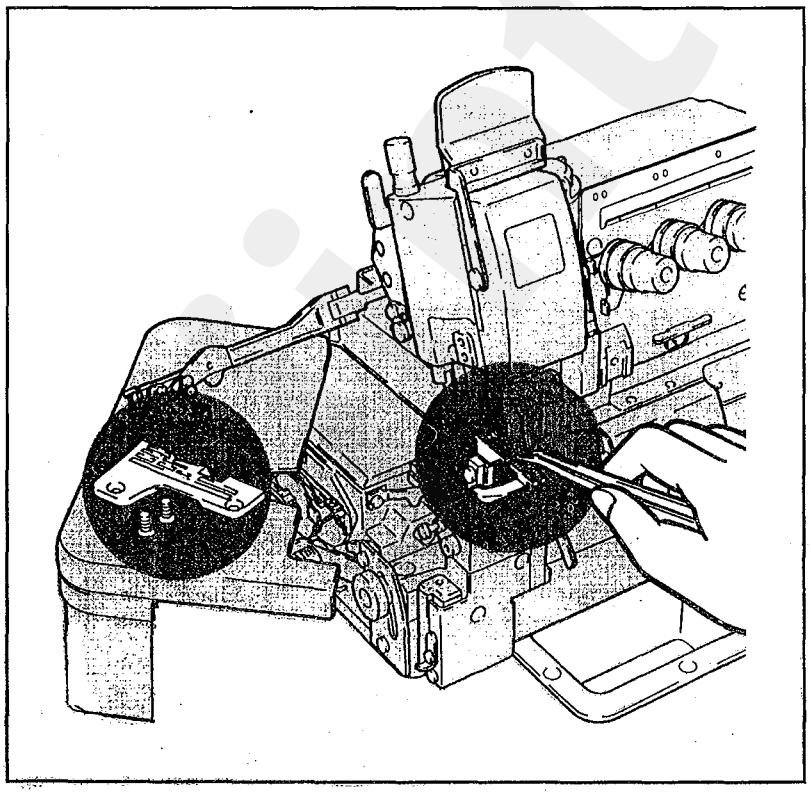

Mainly the slots of the needle plate and the feed rows should be cleaned.



jintex.in

## Replacing the needle

Check the needle carefully to see that the scarf is turned to the rear of the machine. Insert the needle to the proper depth, and fasten securely.

Be sure to use standard needle. Refer to ADJUSTMENT DIMENSIONS on the end of instructions.

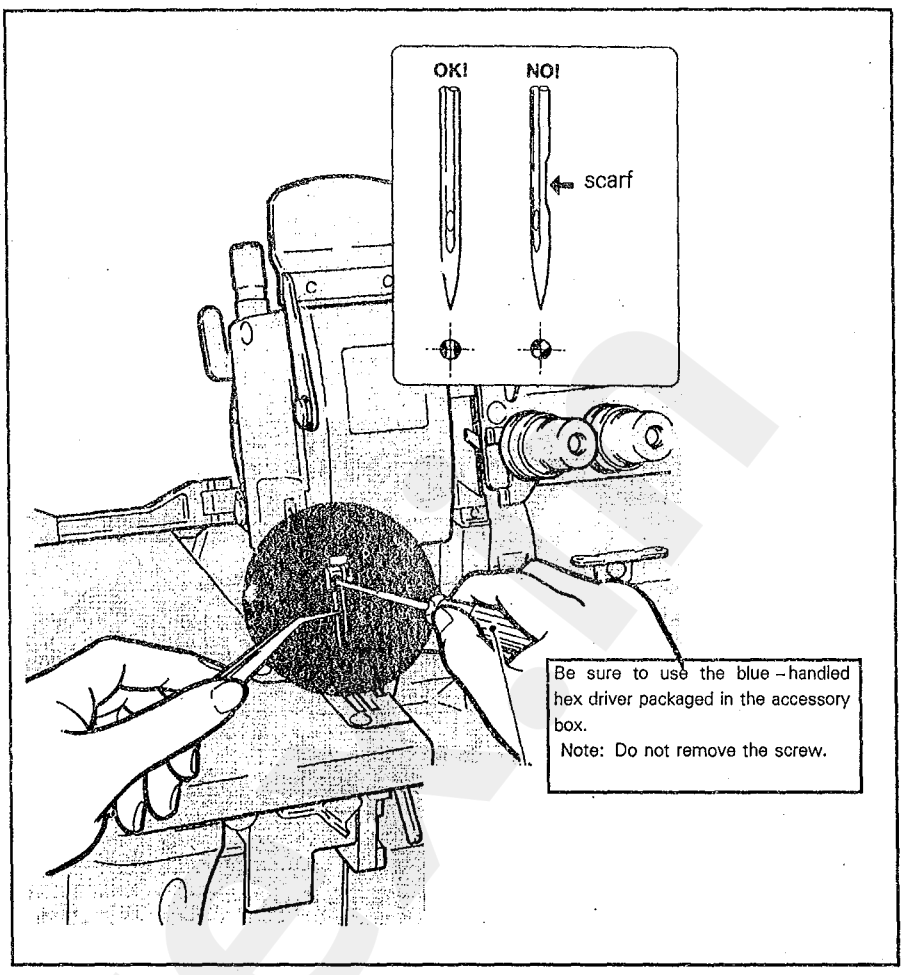




## Checking the oil circulation

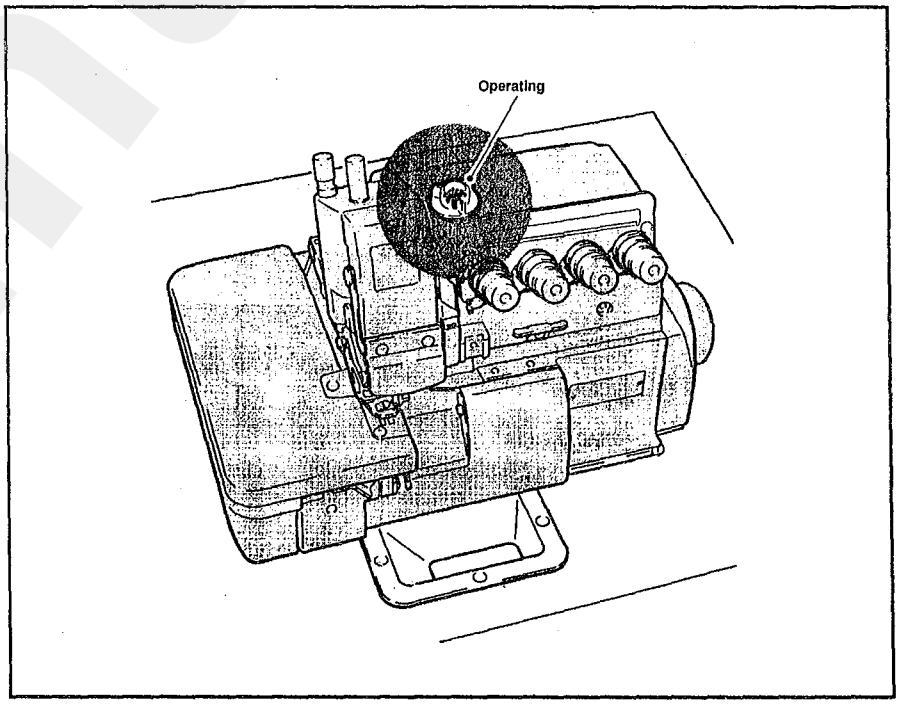




jintex.in

MAINTENANCE DURING USE

## Replacing the oil

Replace the oil one month after the first use and every six months thereafter.

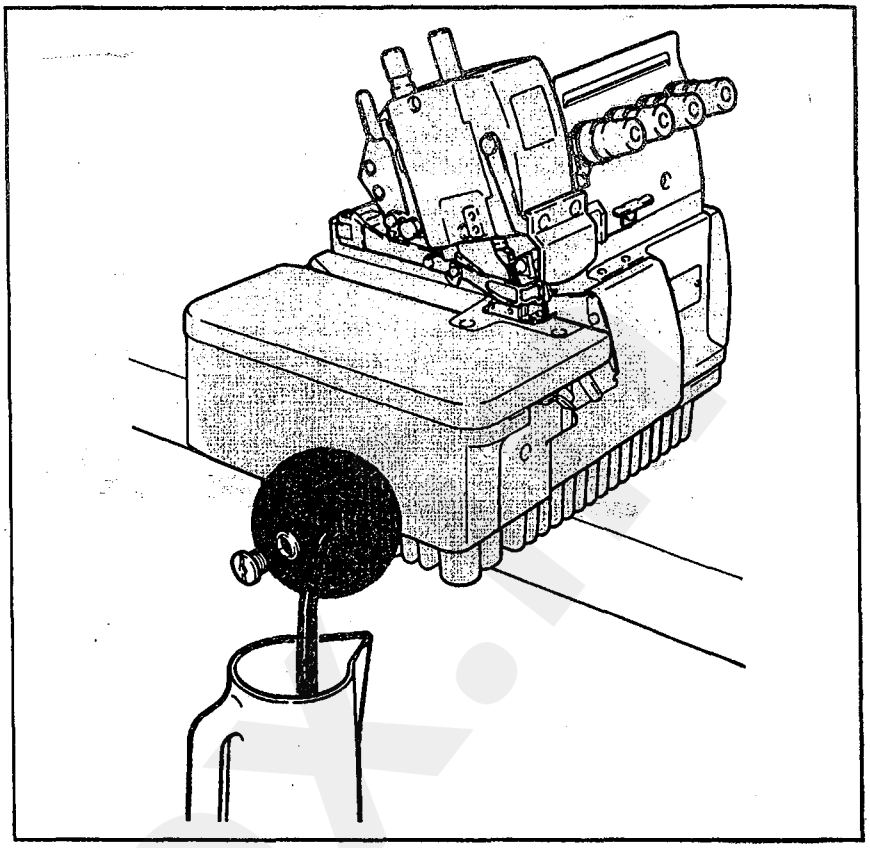

MAINTENANCE DURING USE

## Replacing the lower knife

To remove the lower knife

Temporarily screw ① after sliding the lower knife holder to the left.

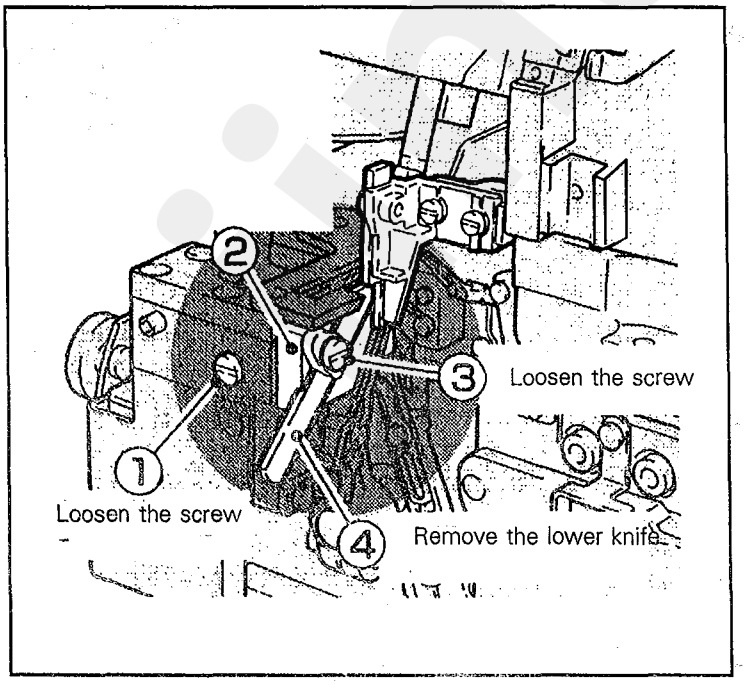


Correct angles to resharpen the lower knife.

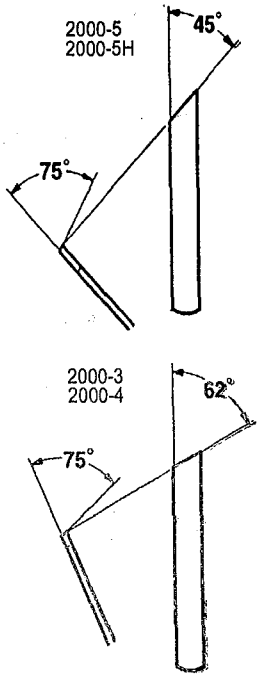




jintex.in

# Replacing the lower knife

## To replace the lower knife

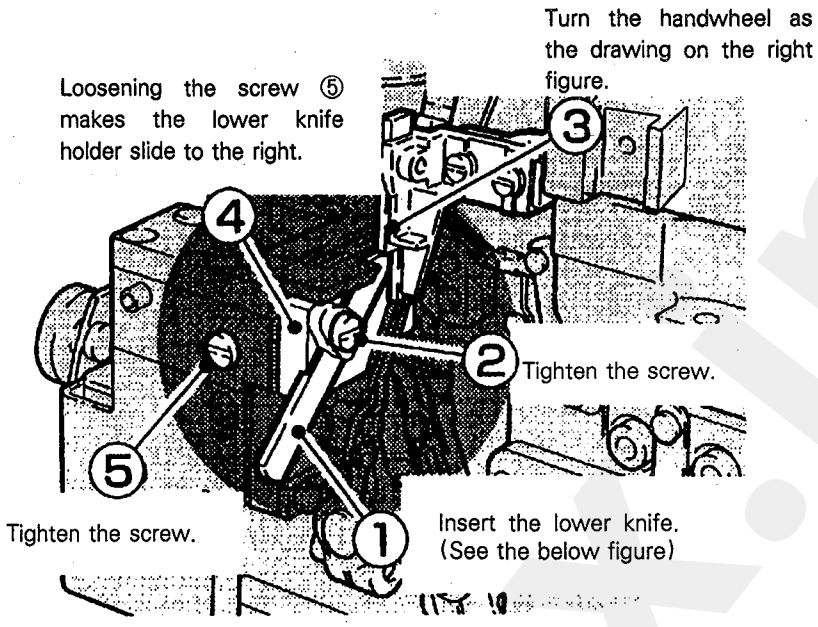


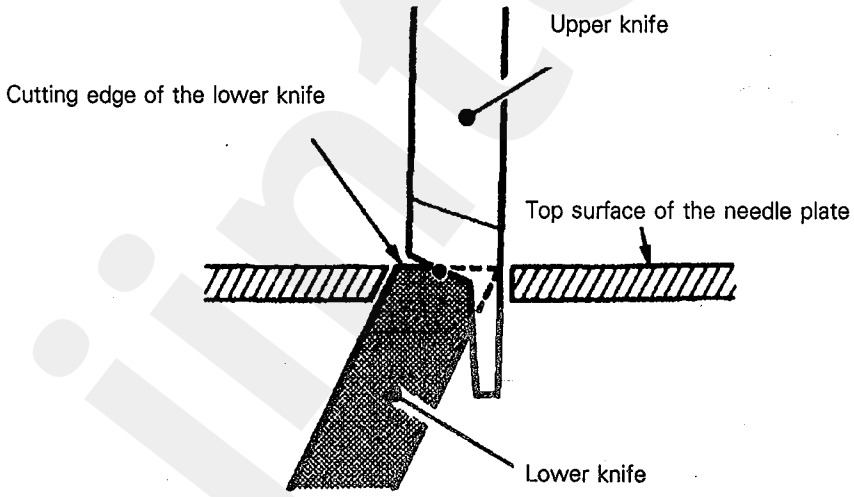


Level of A = Level of B
Check cutting action of knives.



jintex.in

Adjustment dimentions 2000-5 (mm)

| | | | | | | | | |
|---|---|---|---|---|---|---|---|---|
| 2000-5L | 10.6 | 3.9 | 5.1 | 0.9~1.1 | 5.5 | 1.5 | | |
| 2000-5 | 10.6 | 3.9 | 3.3 | 0.9~1.1 | 5.5 | 1.5 | | |
| 2000-5(5x5) | 10.6 | 3.9 | 5.1 | 0.9~1.1 | 5.5 | 1.5 | | |
| 2000-5H | 12.0 | 3.6 | 5.1 | 0.9~1.1 | 6 | 1.5 | | |

Adjustment dimentions 2000-3、2000-4 (mm)

| | | | | | | | |
|---|---|---|---|---|---|---|---|
| 2000-3 | 10.1 | 4.2 | 5.1 | 0.9~1.1 | 5.5 | | |
| 2000-3B | 10.1 | 4.2 | 5.1 | 0.9~1.1 | 5.5 | | |
| 2000-3E | 10.1 | 4.2 | 5.1 | 0.9~1.1 | 5.5 | | |
| 2000-4 | 10.1 | 4.6 | 5.8 | 0.9~1.1 | 5.5 | | |
| 2000-4H | 11.1 | 4.6 | 5.8 | 0.9~1.1 | 6 | | |

2000 Standard needle

| | Organ DC×27 |
|---|---|
| 2000－3 | 11 |
| 2000－3B | 9 |
| 2000－3E | 9 |
| 2000－4 | 11 |

| | Organ DC×27 |
|---|---|
| 2000－4H | 14 |
| 2000－5L | 11 |
| 2000－5 | 14 |
| 2000－5(5×5) | 14 |
| 2000－5H | 21 |



jintex.in

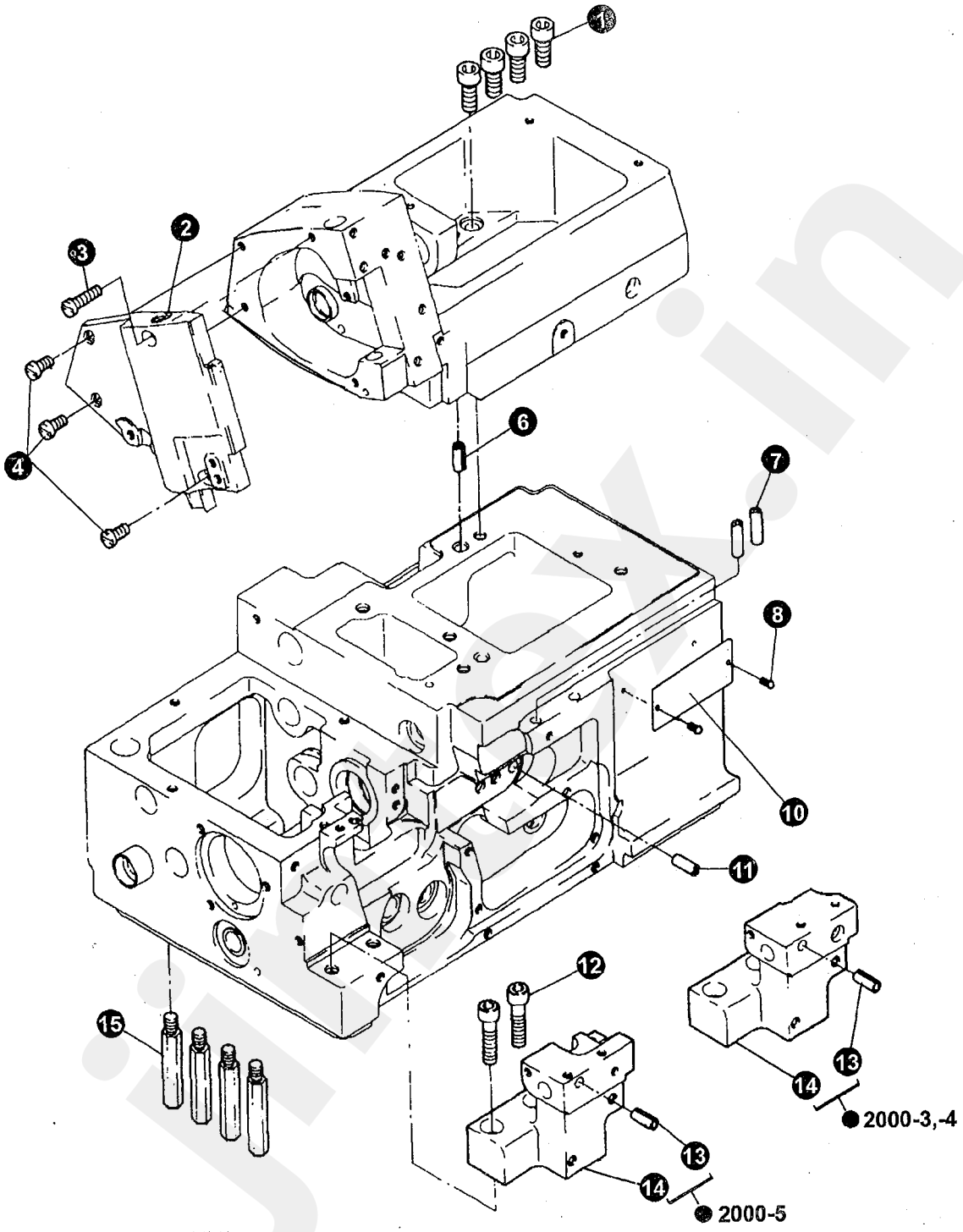




jintex.in

# 1. MACHINE ARM PARTS(1)

| No. | Ret. No. | Description | Qt | | | |
|---|---|---|---|---|---|---|
| | | | 3 | 4/4H | 5 | 5H |
| 1 | S150220005 | Screw | 4 | 4 | 4 | 4 |
| 2 | 155100001 | Frame side cover | 1 | 1 | 1 | 1 |
| 3 | S150215011 | Screw(L) | 1 | 1 | 1 | 1 |
| 4 | S150215009 | Screw(S) | 3 | 3 | 3 | 3 |
| 6 | S8A3104007 | Spring pin | 2 | 2 | 2 | 2 |
| 7 | 155100002 | Thread guide pipe | 2 | 2 | 2 | 2 |
| 8 | 022120003 | Rivet | 2 | 2 | 2 | 2 |
| 10 | 160100001 | Model plate | 1 | | | |
| | 159100007 | Model plate | | 1 | | |
| | 155100037 | Model plate | | | 1 | |
| | 155100038 | Model plate | | | | 1 |
| 11 | S8A3104007 | Spring pin | 1 | 1 | 1 | 1 |
| 12 | S150220016 | Screw | 2 | 2 | 2 | 2 |
| 13 | S8A3104007 | Spring pin | 1 | 1 | 1 | 1 |
| 14 | 159100001 | Needle plate support bracket | 1 | 1 | | |
| | 155100003 | Needle plate support bracket | | | 1 | 1 |
| 15 | 155100005 | Screw | 4 | 4 | 4 | 4 |



jintex.in

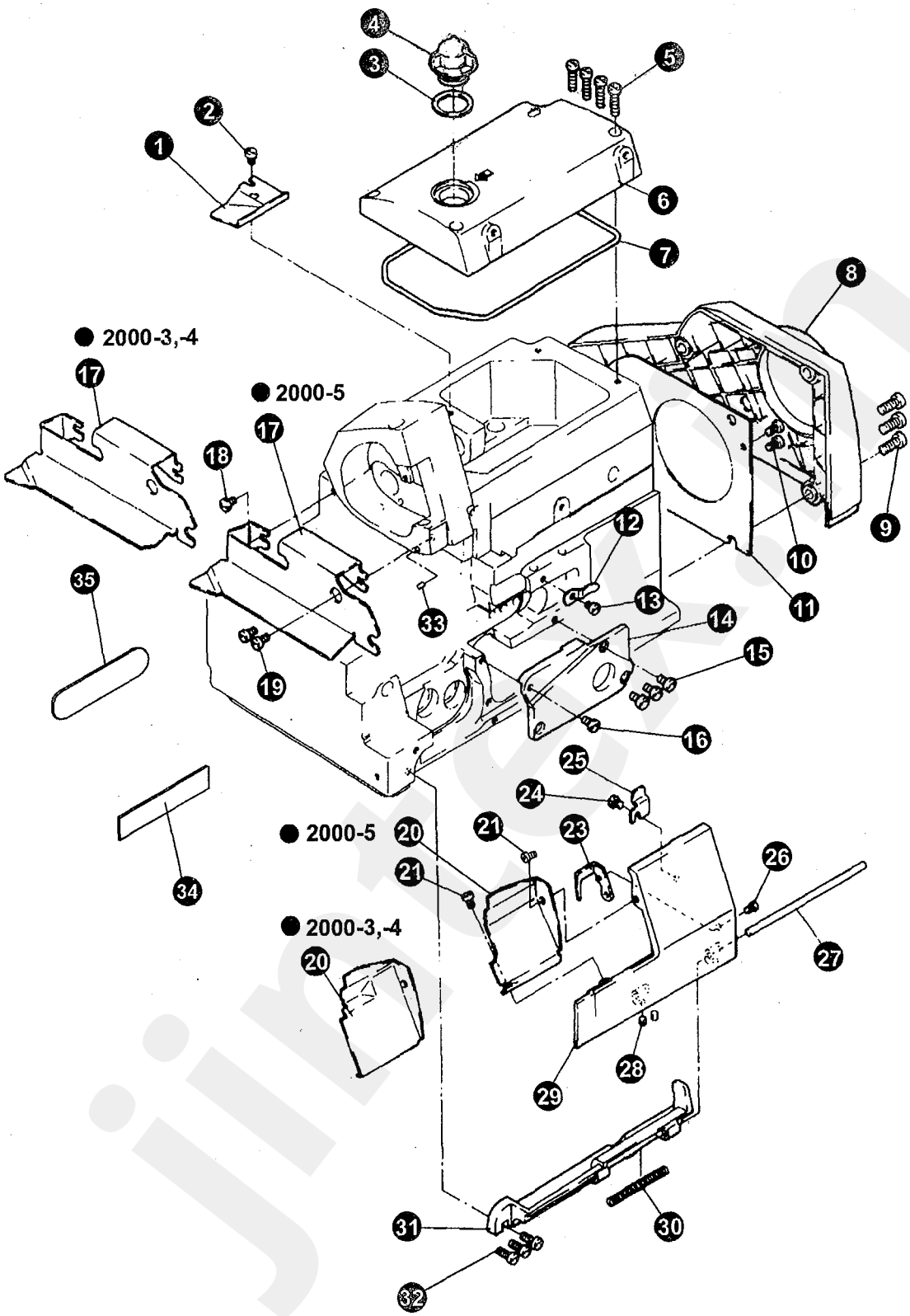




jintex.in

## 2. MACHINE ARM PART(2)

| No. | Ret. No. | Description | Qt | | | |
|---|---|---|---|---|---|---|
| | | | 3 | 4/4H | 5 | 5H |
| 1 | 155100010 | Oil guide plate | 1 | 1 | 1 | 1 |
| 2 | S150215008 | Screw | 1 | 1 | 1 | 1 |
| 3 | 155100031 | Packing | 1 | 1 | 1 | 1 |
| 4 | 155100030 | Oil monitor | 1 | 1 | 1 | 1 |
| 5 | S150215011 | Screw | 4 | 4 | 4 | 4 |
| 6 | 155100008 | Top cover | 1 | 1 | 1 | 1 |
| 7 | 155100009 | Oil gusket | 1 | 1 | 1 | 1 |
| 8 | 155100016 | Belt cover | 1 | 1 | 1 | 1 |
| 9 | S150215014 | Screw | 3 | 3 | 3 | 3 |
| 10 | S150215001 | Screw | 2 | 2 | 2 | 2 |
| 11 | 155100015 | Cooling fan guard | 1 | 1 | 1 | 1 |
| 12 | 155100013 | Plate spring | 1 | 1 | 1 | 1 |
| 13 | S150215008 | Screw | 1 | 1 | 1 | 1 |
| 14 | 155100014 | Cover | 1 | 1 | 1 | 1 |
| 15 | S150215001 | Screw | 3 | 3 | 3 | 3 |
| 16 | 155100034 | Screw | 1 | 1 | 1 | 1 |
| 17 | 159140000 | Cloth guide | 1 | 1 | | |
| | 155150000 | Cloth guide | | | 1 | 1 |
| 18 | 155100033 | Screw | 1 | 1 | 1 | 1 |
| 19 | S150215001 | Screw | 2 | 2 | 2 | 2 |
| 20 | 159120001 | Front cover | 1 | 1 | | |
| | 155120004 | Front cover | | | 1 | 1 |
| 21 | S150215008 | Screw | 2 | 2 | 2 | 2 |
| 23 | 155120007 | Front cover hinge stopper | 1 | 1 | 1 | 1 |
| 24 | S150215008 | Screw | 1 | 1 | 1 | 1 |
| 25 | 155120005 | Stopper plate | 1 | 1 | 1 | 1 |
| 26 | S120202007 | Screw | 1 | 1 | 1 | 1 |
| 27 | 155120002 | Front cover hinge shaft | 1 | 1 | 1 | 1 |
| 28 | B12400432 | Screw | 2 | 2 | 2 | 2 |
| 29 | 155120001 | Front cover(L) | 1 | 1 | 1 | 1 |
| 30 | 155120003 | Spring | 1 | 1 | 1 | 1 |
| 31 | 155120006 | Front cover hinge | 1 | 1 | 1 | 1 |
| 32 | S150215010 | Screw | 3 | 3 | 3 | 3 |
| 33 | 155100012 | Oil seal | 1 | 1 | 1 | 1 |
| 34 | 160DQZ005 | Decorative brand | 1 | 1 | 1 | 1 |
| 35 | 160DHZ001 | Decorative brand | 1 | 1 | 1 | 1 |



jintex.in

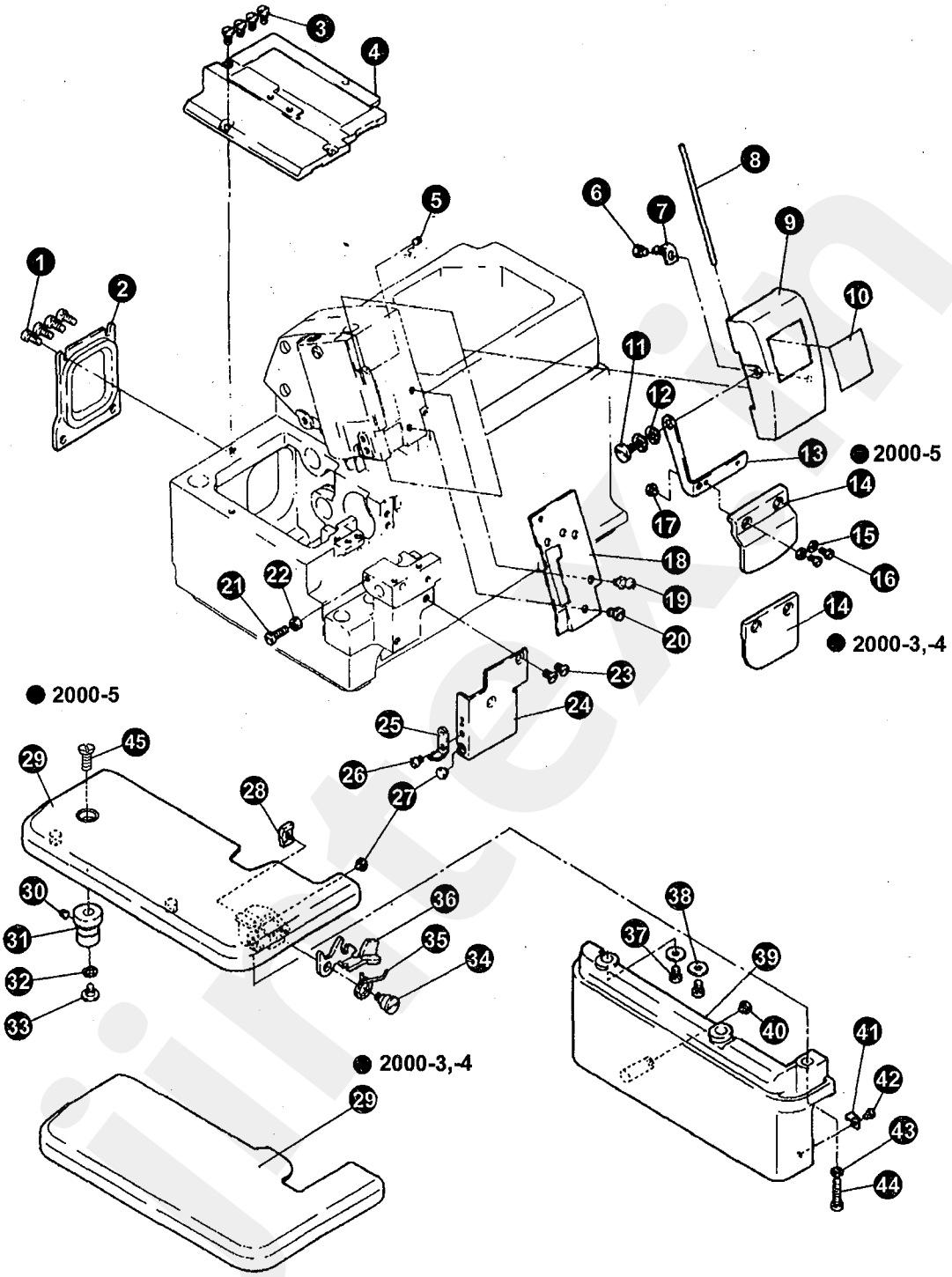
1
2
3
4
5
6
7
8
9
10
11
12
13
2000-5
14
15
16
17
18
19
20
14
2000-3,-4
21
22
23
24
2000-5
25
26
27
28
29
45
30
31
32
33
36
35
34
38
37
39
40
41
42
43
44
2000-3,-4
29



jintex.in

# 3. MACHINE ARM PART(3)

| No. | Ret. No. | Description | Qt | | | |
|---|---|---|---|---|---|---|
| | | | 3 | 4/4H | 5 | 5H |
| 1 | S150215009 | Screw | 4 | 4 | 4 | 4 |
| 2 | 155100017 | Back cover for feed mechanism | 1 | 1 | 1 | 1 |
| 3 | 155100033 | Screw | 4 | 4 | 4 | 4 |
| 4 | 155100018 | Feed bar cover | 1 | 1 | 1 | 1 |
| 5 | B12400432 | Screw | 1 | 1 | 1 | 1 |
| 6 | S150215008 | Screw | 1 | 1 | 1 | 1 |
| 7 | 155100021 | Plate spring | 1 | 1 | 1 | 1 |
| 8 | 155100020 | shaft for needle thread cover | 1 | 1 | 1 | 1 |
| 9 | 155100019 | Needle thread cover | 1 | 1 | 1 | 1 |
| 10 | 160DQZ002 | Trade mark plate | 1 | 1 | 1 | 1 |
| 11 | 155100024 | Screw | 1 | 1 | 1 | 1 |
| 12 | 155100025 | Wave spring | 2 | 2 | 2 | 2 |
| 13 | 155100023 | Eye guard support plate | 1 | 1 | 1 | 1 |
| 14 | 159100004 | Eye guard | 1 | 1 | | |
| | 155100026 | Eye guard | | | 1 | 1 |
| 15 | S8A3103002 | Washer | 2 | 2 | 2 | 2 |
| 16 | S120202007 | Screw | 2 | 2 | 2 | 2 |
| 17 | 155100027 | Rubber plug | 1 | 1 | 1 | 1 |
| 18 | 155100029 | Needle bar seal cover | 1 | 1 | 1 | 1 |
| 19 | 155100022 | Screw | 1 | 1 | 1 | 1 |
| 20 | 155100034 | Screw | 1 | 1 | 1 | 1 |
| 21 | S150215005 | Screw | 1 | 1 | 1 | 1 |
| 22 | S150559002 | Nut | 1 | 1 | 1 | 1 |
| 23 | S150218005 | Screw | 2 | 2 | 2 | 2 |
| 24 | 155140001 | Direction guide plate | 1 | 1 | 1 | 1 |
| 25 | 155140002 | Plate spring | 1 | 1 | 1 | 1 |
| 26 | S150217008 | Screw | 1 | 1 | 1 | 1 |
| 27 | 155100027 | Rubber plug | 3 | 3 | 3 | 3 |
| 28 | 155130006 | Nut | 1 | 1 | 1 | 1 |
| 29 | 159131001 | Cloth plate | 1 | 1 | | |
| | 155131001 | Cloth plate | | | 1 | 1 |
| 30 | B12400432 | Screw | 1 | 1 | 1 | 1 |
| 31 | 155130001 | Cloth plate shaft bush | 1 | 1 | 1 | 1 |
| 32 | 155100025 | Wave spring | 1 | 1 | 1 | 1 |
| 33 | 155100024 | Screw | 1 | 1 | 1 | 1 |
| 34 | 155130005 | Screw | 1 | 1 | 1 | 1 |
| 35 | 155130004 | Spring | 1 | 1 | 1 | 1 |
| 36 | 155130003 | Latch lever for cloth plate | 1 | 1 | 1 | 1 |
| 37 | S150215008 | Screw | 2 | 2 | 2 | 2 |
| 38 | 155130008 | Washer | 2 | 2 | 2 | 2 |
| 39 | 155130007 | Side cover | 1 | 1 | 1 | 1 |
| 40 | 155100027 | Rubber plug | 1 | 1 | 1 | 1 |
| 41 | 155130009 | Plate spring | 1 | 1 | 1 | 1 |
| 42 | S120202004 | Screw | 1 | 1 | 1 | 1 |
| 43 | S4B3000010 | Spring washer | 1 | 1 | 1 | 1 |
| 44 | S150215015 | Screw(L) | 1 | 1 | 1 | 1 |
| 45 | 116400008 | Screw | 1 | 1 | 1 | 1 |



jintex.in

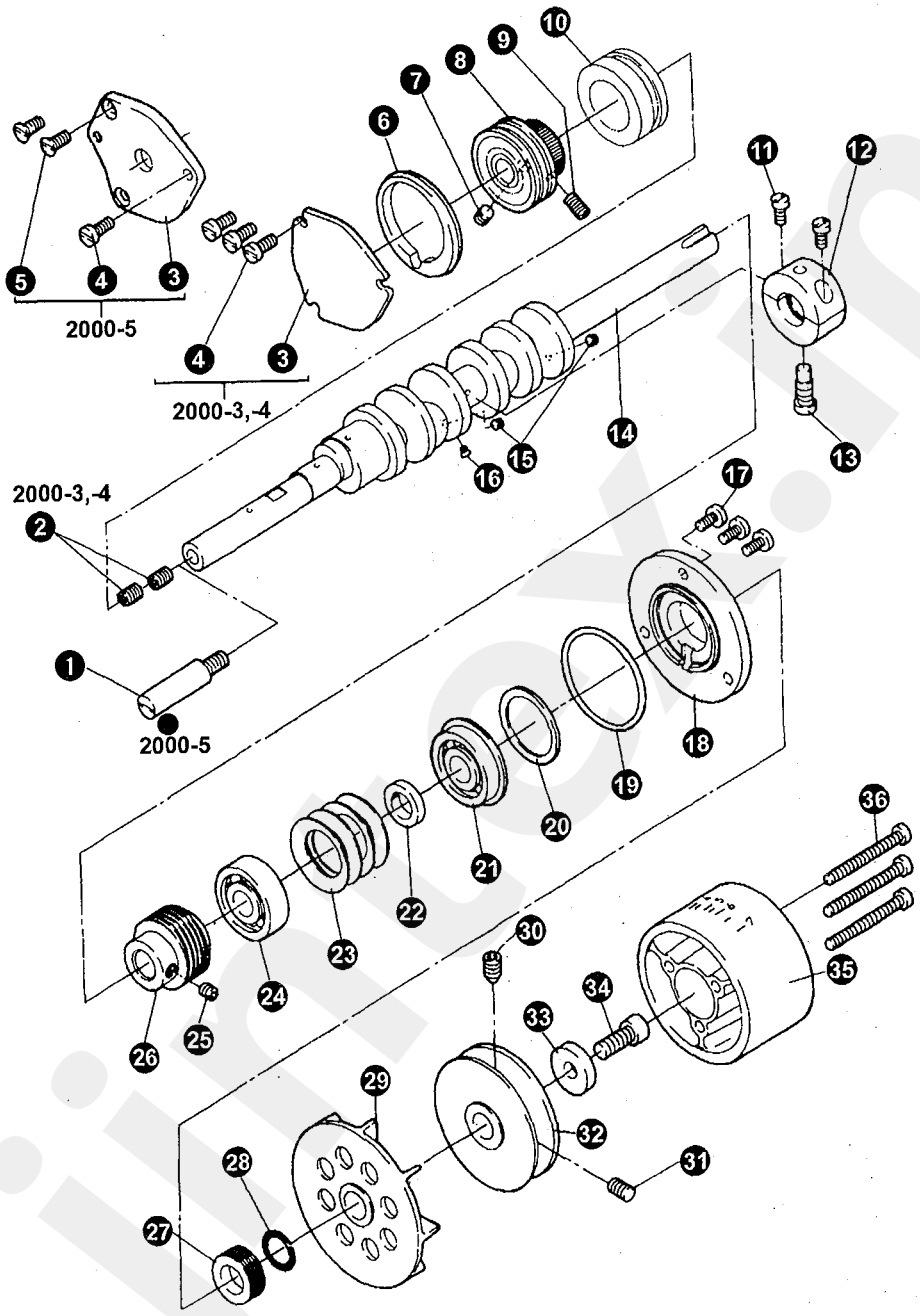




jintex.in

# 4. NEEDLE BAR DRIVE PARTS(1)

| No. | Ret. No. | Description | Qt | | | |
|---|---|---|---|---|---|---|
| | | | 3 | 4/4H | 5 | 5H |
| 1 | 155200001 | Crank shaft extension | | | 1 | 1 |
| 2 | S150224007 | Screw | 2 | 2 | | |
| 3 | 159200001 | Bearing cap | 1 | 1 | | |
| | 155200002 | Bearing cap | | | 1 | 1 |
| 4 | S150215009 | Screw | 3 | 3 | | |
| | S150215009 | Screw | | | 1 | 1 |
| 5 | S120205003 | Screw | | | 2 | 2 |
| 6 | 155200004 | Rubber ring | 1 | 1 | 1 | 1 |
| 7 | B12500532 | Screw | 1 | 1 | 1 | 1 |
| 8 | 155220000 | Ball bearing(L), assy | 1 | 1 | 1 | 1 |
| 9 | S150224006 | Screw | 1 | 1 | 1 | 1 |
| 10 | 155200005 | Crank shaftbush(M) | 1 | 1 | 1 | 1 |
| 11 | SFB0201004 | Screw | 2 | 2 | 2 | 2 |
| 12 | 155230001 | Stopper bush | 1 | 1 | 1 | 1 |
| 13 | 155200006 | Screw | 1 | 1 | 1 | 1 |
| 14 | 155210001 | Crank shaft | 1 | 1 | 1 | 1 |
| 15 | 006301008 | Screw | 2 | 2 | 2 | 2 |
| 16 | 028260003 | Screw | 1 | 1 | 1 | 1 |
| 17 | S150215009 | Screw | 3 | 3 | 3 | 3 |
| 18 | 155200011 | Bearing presser | 1 | 1 | 1 | 1 |
| 19 | 155200018 | O -type ring | 1 | 1 | 1 | 1 |
| 20 | 155200010 | Packing | 1 | 1 | 1 | 1 |
| 21 | 052200036 | Ball bearing(right) | 1 | 1 | 1 | 1 |
| 22 | 155200009 | Collar | 1 | 1 | 1 | 1 |
| 23 | 155200008 | Spring washer | 4 | 4 | 4 | 4 |
| 24 | S150866046 | Ball bearing(middle) | 1 | 1 | 1 | 1 |
| 25 | B12500532 | Screw | 1 | 1 | 1 | 1 |
| 26 | 155200007 | Worm | 1 | 1 | 1 | 1 |
| 27 | 155200012 | Crank shaft oil reject | 1 | 1 | 1 | 1 |
| 28 | S150656004 | O -type ring | 1 | 1 | 1 | 1 |
| 29 | 155200013 | Cooling fan | 1 | 1 | 1 | 1 |
| 30 | S150225003 | Screw | 1 | 1 | 1 | 1 |
| 31 | S150224003 | Screw | 1 | 1 | 1 | 1 |
| 32 | 155200014 | Belt wheel | 1 | 1 | 1 | 1 |
| 33 | 155200016 | Washer | 1 | 1 | 1 | 1 |
| 34 | S150220005 | Screw | 1 | 1 | 1 | 1 |
| 35 | 155200017 | Machine pulley | 1 | 1 | 1 | 1 |
| 36 | S150215012 | Screw | 3 | 3 | 3 | 3 |



jintex.in

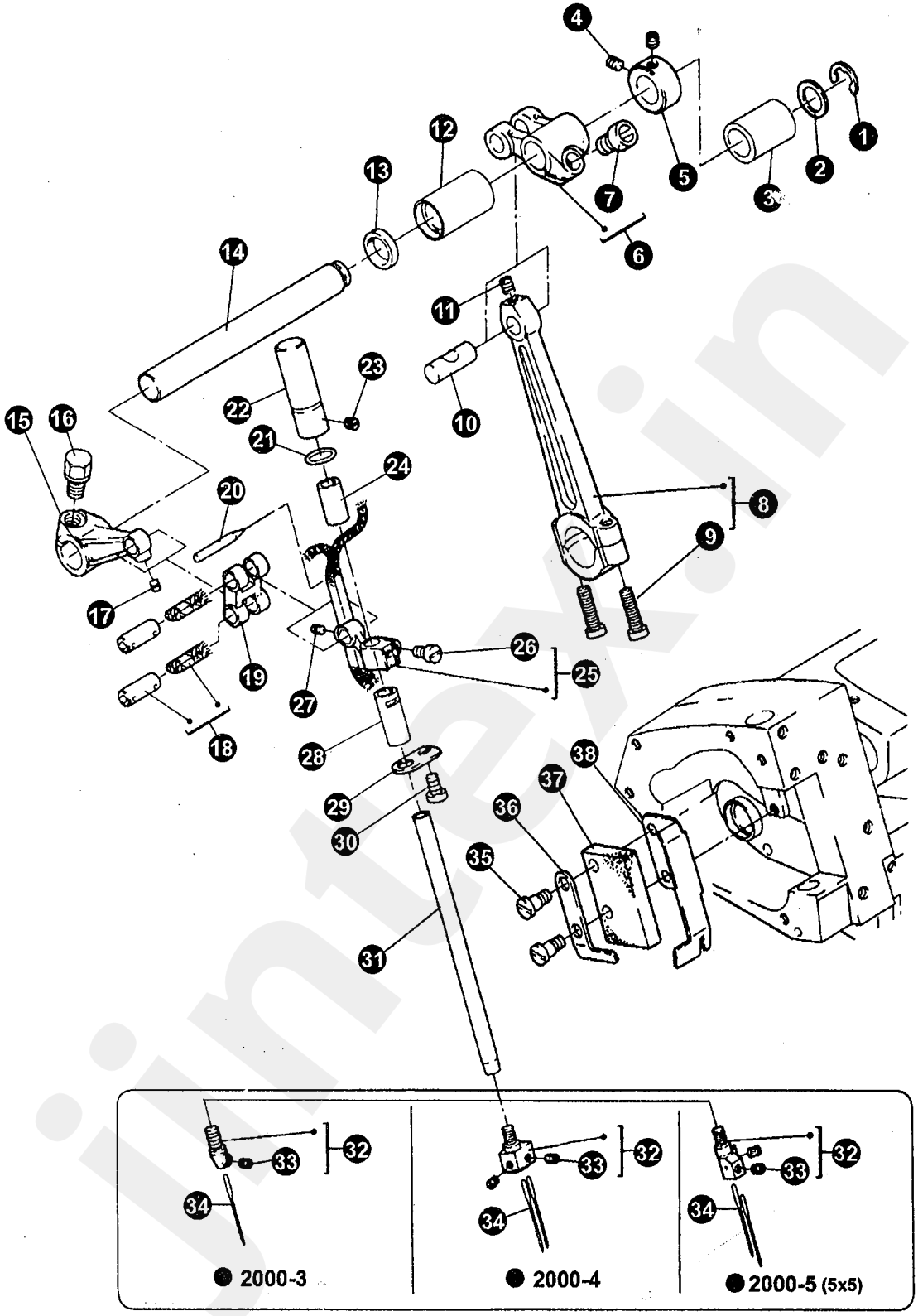




jintex.in

## 5. NEEDLE BAR DRIVE PARTS (2)

| No. | Ret. No. | Description | Qt | | | | |
|---|---|---|---|---|---|---|---|
| | | | 3 | 4 | 4H | 5 | 5H |
| 1 | 060410014 | Retaining ring | 1 | 1 | 1 | 1 | 1 |
| 2 | 155300006 | Washer | 1 | 1 | 1 | 1 | 1 |
| 3 | 155300005 | Bush | 1 | 1 | 1 | 1 | 1 |
| 4 | B12400432 | Screw | 2 | 2 | 2 | 2 | 2 |
| 5 | 155300004 | Set collar | 1 | 1 | 1 | 1 | 1 |
| 6 | 155310000 | Upper shaft crank complete | 1 | 1 | | 1 | |
| | 155370000 | Upper shaft crank complete | | | 1 | | 1 |
| 7 | 155300017 | Screw | 1 | 1 | 1 | 1 | 1 |
| 8 | 155330000 | Needle drive crank rod assy | 1 | 1 | 1 | 1 | 1 |
| 9 | B62401612 | Screw | 2 | 2 | 2 | 2 | 2 |
| 10 | 155300023 | Pin | 1 | 1 | 1 | 1 | 1 |
| 11 | S150225008 | Screw | 1 | 1 | 1 | 1 | 1 |
| 12 | 155300002 | Bush | 1 | 1 | 1 | 1 | 1 |
| 13 | 155300003 | Oil seal | 1 | 1 | 1 | 1 | 1 |
| 14 | 155300001 | Upper shaft | 1 | 1 | 1 | 1 | 1 |
| 15 | 155300007 | Needle bar crank | 1 | 1 | 1 | 1 | 1 |
| 16 | 155400010 | Screw | 1 | 1 | 1 | 1 | 1 |
| 17 | S150225005 | Screw | 1 | 1 | 1 | 1 | 1 |
| 18 | 155320000 | Pin | 2 | 2 | 2 | 2 | 2 |
| 19 | 155300008 | Link for needle bar | 1 | 1 | 1 | 1 | 1 |
| 20 | 155300012 | Oil wick pin | 1 | 1 | 1 | 1 | 1 |
| 21 | S150653005 | O – type ring | 1 | 1 | 1 | 1 | 1 |
| 22 | 155300014 | Upper bush needle bar | 1 | 1 | 1 | 1 | 1 |
| 23 | B12400432 | Screw | 1 | 1 | 1 | 1 | 1 |
| 24 | 155300013 | Bush | 1 | 1 | 1 | 1 | 1 |
| 25 | 155300010 | Needle connector | 1 | 1 | 1 | 1 | 1 |
| 26 | 155300030 | Screw | 1 | 1 | 1 | 1 | 1 |
| 27 | S150225005 | Screw | 1 | 1 | 1 | 1 | 1 |
| 28 | 155300015 | Bush | 1 | 1 | 1 | 1 | 1 |
| 29 | 155300016 | Needle bar oil ervoir | 1 | 1 | 1 | 1 | 1 |
| 30 | S150215008 | Screw | 1 | 1 | 1 | 1 | 1 |
| 31 | 155350001 | Needle bar | 1 | 1 | 1 | 1 | 1 |
| 32 | 160320001 | Needle holder | 1 | | | | |
| | 159320001 | Needle holder | | 1 | 1 | | |
| | 155350002 | Needle holder | | | | 1 | 1 |
| 33 | 182610010 | Screw | 1 | 2 | 2 | 2 | 2 |
| 34 | 159300007 | Needle | 1 | | | | |
| | 159300007 | Needle | | 2 | 2 | | |
| | 028280109 | Needle | | | | 2 | |
| | 077200401 | Needle | | | | | 2 |
| 35 | 155300021 | Screw | 2 | 2 | 2 | 2 | 2 |
| 36 | 155300020 | Set plate for oil felt | 1 | 1 | 1 | 1 | 1 |
| 37 | 155300019 | Oil felt | 1 | 1 | 1 | 1 | 1 |
| 38 | 155300022 | Oil reservoir | 1 | 1 | 1 | 1 | 1 |



jintex.in

● 2000-5 (5x5)

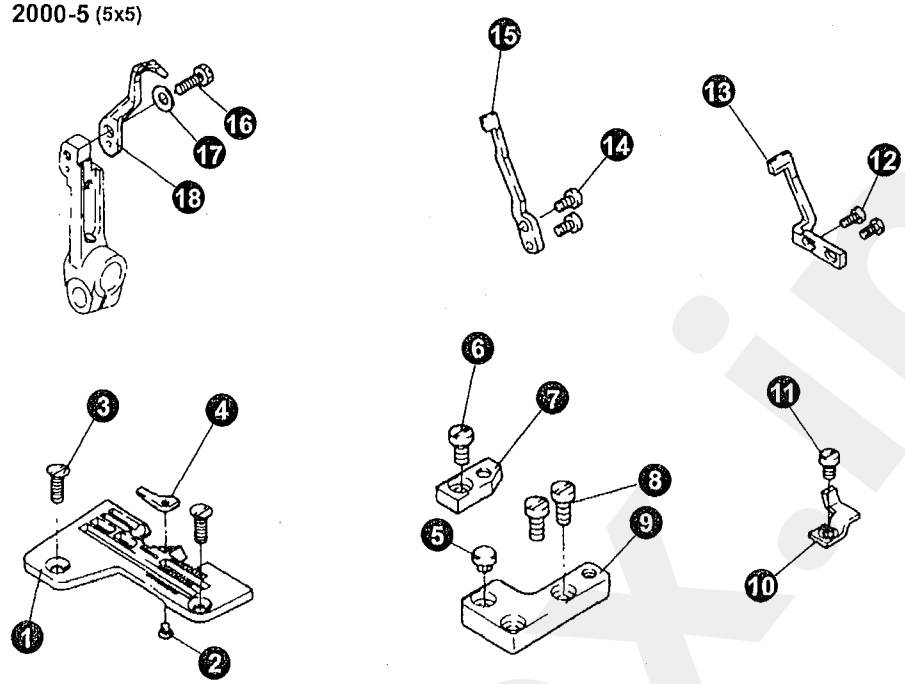


● 2000-3,-4

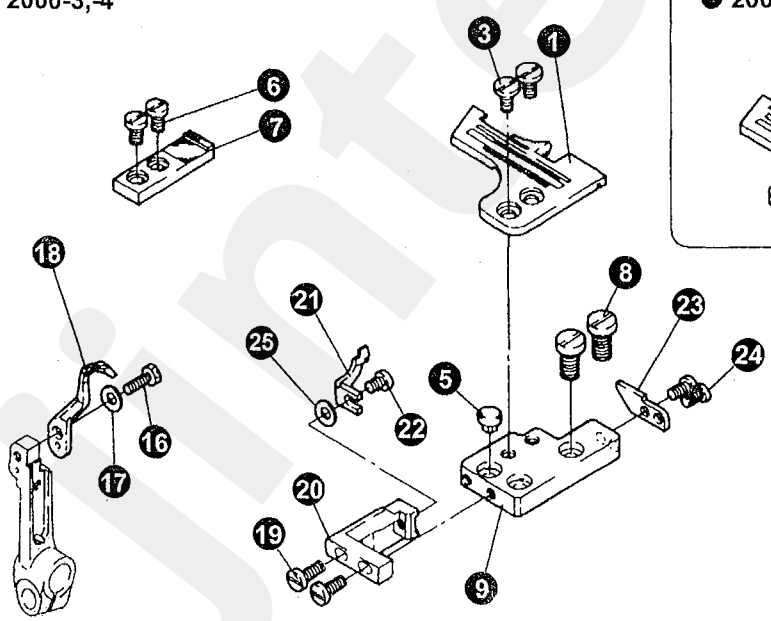


● 2000-4

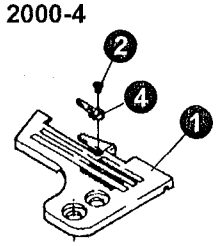




jintex.in

# 6. NEEDLE BAR DRIVE PARTS(3)

| No. | Ret. No. | Description | Qt | | | |
|---|---|---|---|---|---|---|
| | | | 3 | 4/4H | 5 | 5H |
| 1 | 160300001 | Needle plate | 1 | | | |
| | 160300003 | Needle plate | 1 | | | |
| | 159310001 | Needle plate | | 1 | | |
| | 155340001 | Needle plate | | | 1 | |
| | 155380001 | Needle plate | | | | 1 |
| 2 | 159310003 | Screw | | 1 | | |
| | 039230003 | Screw | | | 1 | 1 |
| 3 | 159300006 | Screw | 2 | 2 | | |
| | 028200050 | Screw | | | 2 | 2 |
| 4 | 159310002 | Needle plate fitting(S) | | 1 | | |
| | 155340002 | Needle plate fitting | | | 1 | |
| | 155380002 | Needle plate fitting | | | | 1 |
| 5 | 155100027 | Rubber plug | 1 | 1 | 1 | 1 |
| 6 | B62400812 | Screw | 2 | 2 | | |
| | B62400812 | Screw | | | 1 | 1 |
| 7 | 159330000 | Needle plate baracket(rear) | 1 | 1 | | |
| | 155300029 | Needle plate baracket(rear) | | | 1 | 1 |
| 8 | B62401012 | Screw | 2 | 2 | | |
| | B62401012 | Scrw | | | 2 | 2 |
| 9 | 159300004 | Needle plate bracket(front) | 1 | 1 | | |
| | 155300028 | Needle plate bracket(front) | | | 1 | 1 |
| 10 | 155300027 | Chain stitch needle guard (front) | | | 1 | 1 |
| 11 | S150217002 | Screw | | | 1 | 1 |
| 12 | S120202001 | Screw | | | 2 | 2 |
| 13 | 155300026 | Chain stitch needle guard (rear) | | | 1 | 1 |
| 14 | S150217002 | Screw | | | 2 | 2 |
| 15 | 155300025 | Needle guard | | | 1 | 1 |
| 16 | 028200054 | Screw | 1 | 1 | 1 | 1 |
| 17 | Q58600008 | Washer | 1 | 1 | 1 | 1 |
| 18 | 155300024 | Movalbe needle guard | 1 | 1 | 1 | 1 |
| 19 | 110550005 | Screw | 2 | 2 | | |
| 20 | 159300002 | Needle guard bracket | 1 | 1 | | |
| 21 | 159300001 | Needle guard | 1 | 1 | | |
| 22 | SFB0201003 | Screw | 1 | 1 | | |
| 23 | 159300005 | Needle plate guide plate | 1 | 1 | | |
| 24 | SFB0201004 | Screw | 2 | 2 | | |
| 25 | S8A3103002 | Washer | 1 | 1 | | |



jintex.in

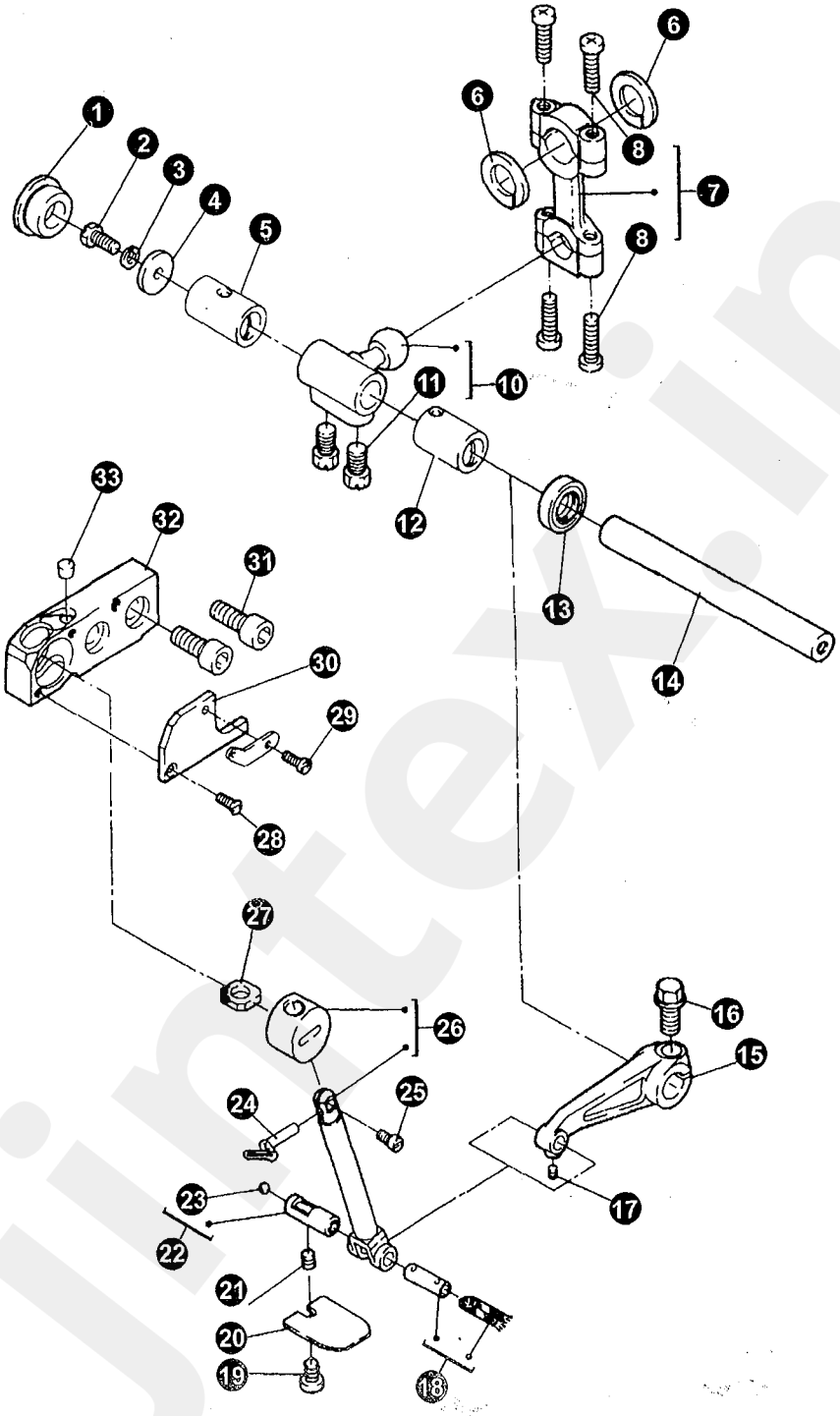


jintex.in



jintex.in

# 7. UPPER AND LOWER LOOPER DRIVE PART(1)

| No. | Ret. No. | Description | Qt | | | | |
|---|---|---|---|---|---|---|---|
| | | | 3 | 4 | 4H | 5 | 5H |
| 1 | 155400006 | Rubber plug | 1 | 1 | 1 | 1 | 1 |
| 2 | S150204002 | Screw | 2 | 2 | 2 | 2 | 2 |
| 3 | S8A3103012 | Spring washer | 2 | 2 | 2 | 2 | 2 |
| 4 | 155400005 | Washer | 1 | 1 | 1 | 1 | 1 |
| 5 | 155400004 | Bush | 1 | 1 | 1 | 1 | 1 |
| 6 | 155400001 | Washer | 2 | 2 | 2 | 2 | 2 |
| 7 | 155410000 | looper ball link complete | 1 | 1 | 1 | 1 | 1 |
| 8 | B62401612 | Screw | 4 | 4 | 4 | 4 | 4 |
| 10 | 155420000 | Upper looper ball crank complete | 1 | 1 | | 1 | |
| | 159400002 | Upper looper ball crank complete | | | 1 | | 1 |
| 11 | 155400021 | Screw | 2 | 2 | 2 | 2 | 2 |
| 12 | 155400003 | Bushing | 1 | 1 | 1 | 1 | 1 |
| 13 | 028330001 | Oil seal | 1 | 1 | 1 | 1 | 1 |
| 14 | 155400002 | Upper/lower looper shaft | 1 | 1 | 1 | 1 | 1 |
| 15 | 155400009 | Upper looper crank | 1 | 1 | 1 | 1 | 1 |
| 16 | 155400010 | Screw | 1 | 1 | 1 | 1 | 1 |
| 17 | S150225005 | Screw | 1 | 1 | 1 | 1 | 1 |
| 18 | 155430000 | Pin complete | 1 | 1 | 1 | 1 | 1 |
| 19 | S150215008 | Screw | 1 | 1 | 1 | 1 | 1 |
| 20 | 155400014 | Oil reservoir | 1 | 1 | 1 | 1 | 1 |
| 21 | B12400432 | Screw | 1 | 1 | 1 | 1 | 1 |
| 22 | 155440000 | Pin complete | 1 | 1 | 1 | 1 | 1 |
| 23 | S8A3105006 | Small ball plug | 1 | 1 | 1 | 1 | 1 |
| 24 | 160400001 | Upper looper | 1 | | | | |
| | 159400001 | Upper looper | | 1 | 1 | | |
| | 155400015 | Upper looper | | | | 1 | |
| | 155400025 | Upper looper | | | | | 1 |
| 25 | 028100007 | Screw | 1 | 1 | 1 | 1 | 1 |
| 26 | 155400011/12 | Upper looper tension shaft and guide | 1 | 1 | 1 | 1 | 1 |
| 27 | 155400013 | Oil felt | 1 | 1 | 1 | 1 | 1 |
| 28 | S150218001 | Screw | 1 | 1 | 1 | 1 | 1 |
| 29 | S150217011 | Screw | 1 | 1 | 1 | 1 | 1 |
| 30 | 155400016 | Over looper guide cover | 1 | 1 | 1 | 1 | 1 |
| 31 | S150220005 | Screw | 2 | 2 | 2 | 2 | 2 |
| 32 | 155400007 | Over looper mechanism | 1 | 1 | 1 | 1 | 1 |
| 33 | 155400008 | Oil felt | 1 | 1 | 1 | 1 | 1 |



jintex.in

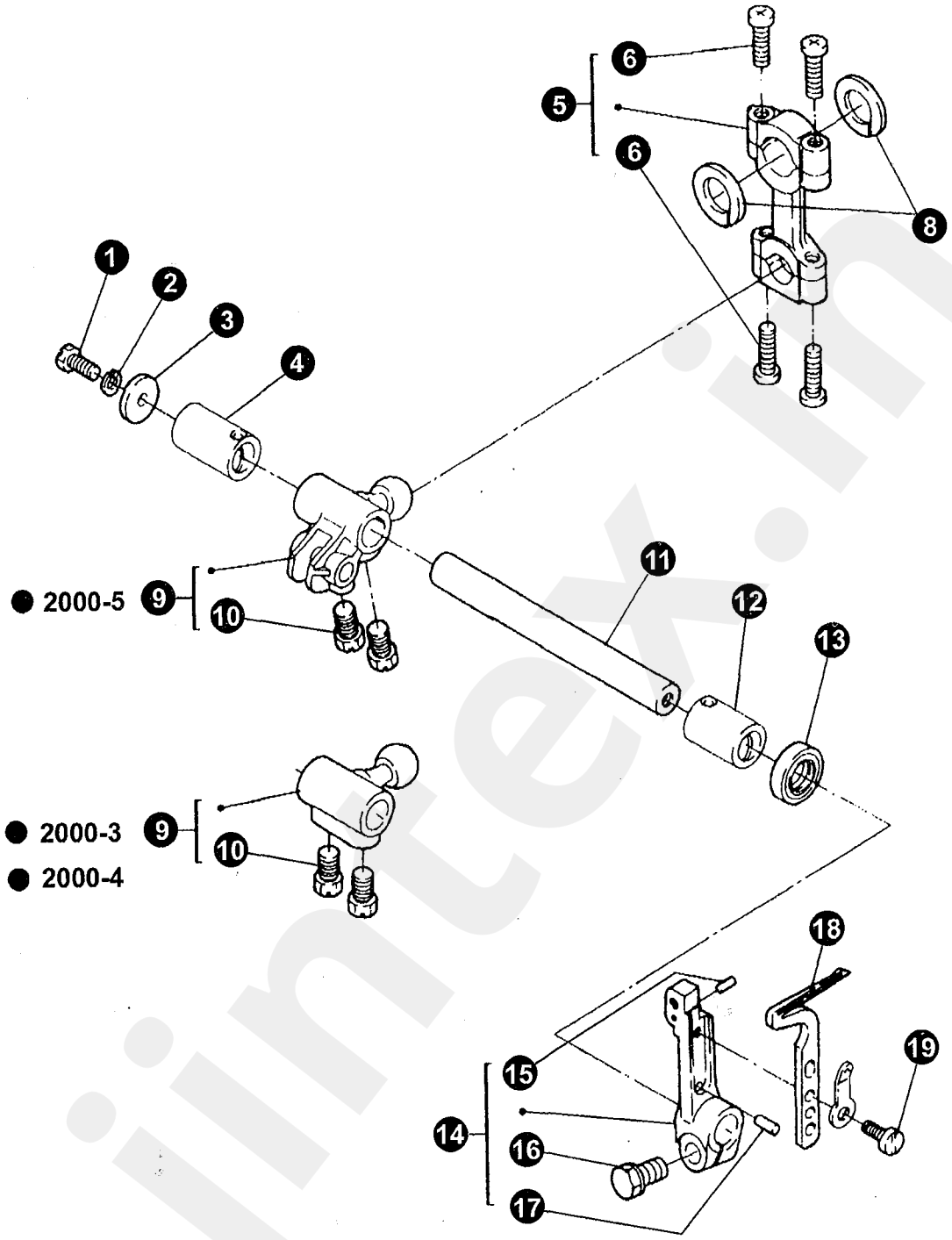




jintex.in

# 8. UPPER AND LOWER LOOPER DRIVE PART(2)

| No. | Ret. No. | Description | Qt | | | |
|---|---|---|---|---|---|---|
| | | | 3 | 4/4H | 5 | 5H |
| 1 | S150204002 | Screw | 1 | 1 | 1 | 1 |
| 2 | S8A3103012 | Spring washer | 1 | 1 | 1 | 1 |
| 3 | 155400005 | Washer | 1 | 1 | 1 | 1 |
| 4 | 155400020 | Bush | 1 | 1 | 1 | 1 |
| 5 | 155410000 | Looper ball link complete | 1 | 1 | 1 | 1 |
| 6 | B62401612 | Screw | 4 | 4 | 4 | 4 |
| 8 | 155400001 | Washer | 2 | 2 | 2 | 2 |
| 9 | 159400002 | Lower looper ball crank | | 1 | | |
| | 155400019 | Lower looper ball crank | | | 1 | 1 |
| | 155420000 | Lower looper ball crank | 1 | | | |
| 10 | 155400021 | Screw | 2 | 2 | 2 | 2 |
| 11 | 155400002 | Upper/lower looper shaft | 1 | 1 | 1 | 1 |
| 12 | 155400003 | Bush | 1 | 1 | 1 | 1 |
| 13 | 028330001 | Oil seal | 1 | 1 | 1 | 1 |
| 14 | 155451000 | Lower looper holder complete | 1 | 1 | 1 | 1 |
| 15 | 028300043 | Pin | 1 | 1 | 1 | 1 |
| 16 | 155400010 | Screw | 1 | 1 | 1 | 1 |
| 17 | 028300046 | Pin | 1 | 1 | 1 | 1 |
| 18 | 155450002 | Lower looper | 1 | 1 | 1 | 1 |
| 19 | 028100027 | Screw | 1 | 1 | 1 | 1 |



jintex.in

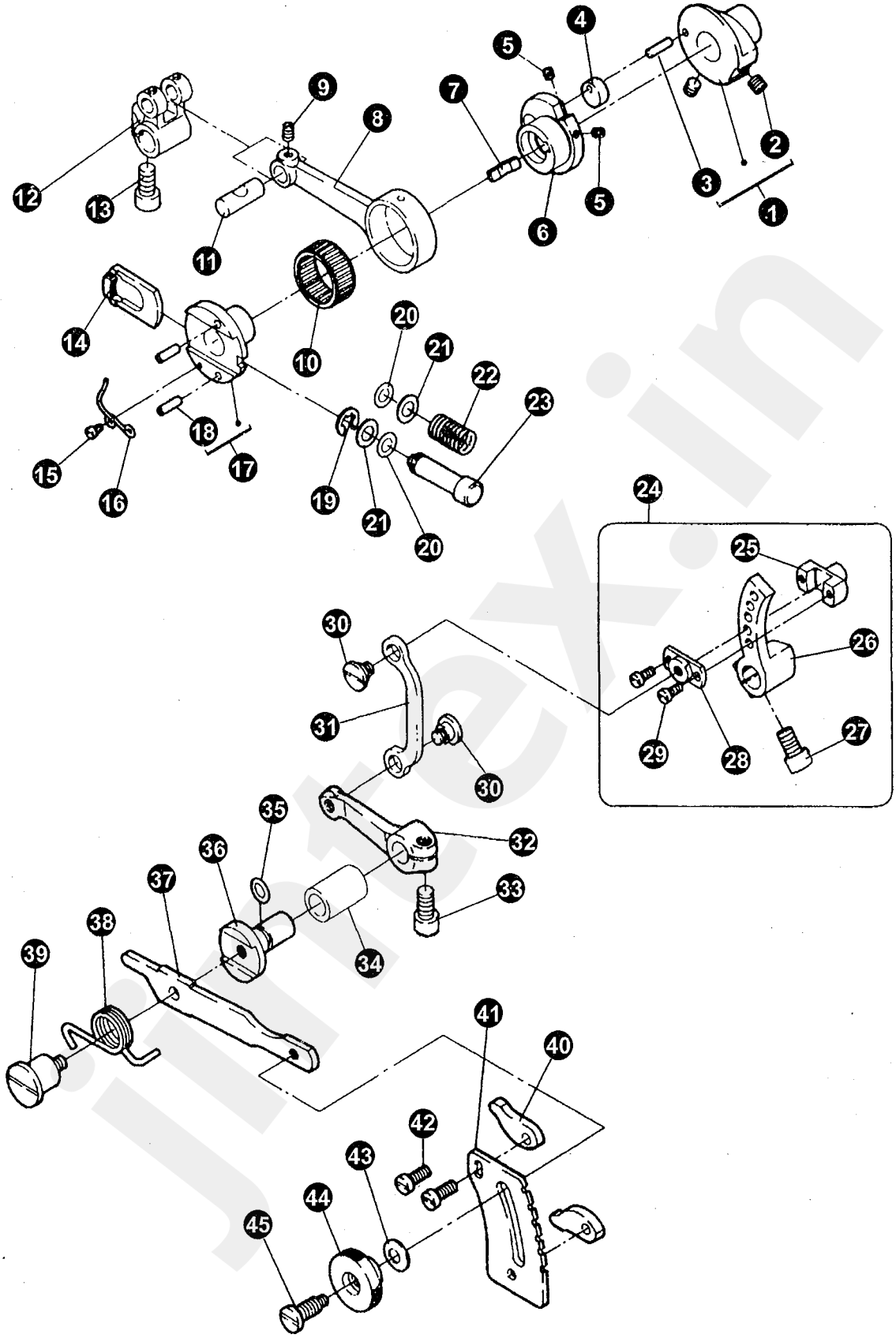
1
2
3
4
5
5
6
7
8
9
10
11
12
13
14
15
16
17
18
19
20
20
21
21
22
23
24
25
26
27
28
29
30
30
31
32
33
34
35
36
37
38
39
40
41
42
43
44
45



jintex.in

# 9. FEED DOG LIFT PART(1)

| No. | Ret. No. | Description | Qt | | | |
|---|---|---|---|---|---|---|
| | | | 3 | 4/4H | 5 | 5H |
| 1 | 155530000 | Feed drive cam holder complete | 1 | 1 | 1 | 1 |
| 2 | B12500532 | Screw | 2 | 2 | 2 | 2 |
| 3 | 028400082 | Pin | 1 | 1 | 1 | 1 |
| 4 | 028400080 | Roller | 1 | 1 | 1 | 1 |
| 5 | S150224015 | Screw | 2 | 2 | 2 | 2 |
| 6 | 155500026 | Feed drive cam | 1 | 1 | 1 | 1 |
| 7 | 155500027 | Plate spring | 1 | 1 | 1 | 1 |
| 8 | 155500028 | Link for feed drive | 1 | 1 | 1 | 1 |
| 9 | S150225008 | Screw | 1 | 1 | 1 | 1 |
| 10 | 155540000 | Needle bearing | 1 | 1 | 1 | 1 |
| 11 | 155300023 | Pin | 1 | 1 | 1 | 1 |
| 12 | 155500029 | Crank for feed drive | 1 | 1 | 1 | 1 |
| 13 | 155300017 | Screw | 1 | 1 | 1 | 1 |
| 14 | 155500030 | Stitch length adjust stopper | 1 | 1 | 1 | 1 |
| 15 | 155500032 | Screw | 1 | 1 | 1 | 1 |
| 16 | 155500031 | Spring | 1 | 1 | 1 | 1 |
| 17 | 155550000 | Stitch length cam complete | 1 | 1 | 1 | 1 |
| 18 | S150446010 | Spring pin | 2 | 2 | 2 | 2 |
| 19 | S8A3103018 | Retaining ring | 1 | 1 | 1 | 1 |
| 20 | S4A0604005 | O – type ring | 2 | 2 | 2 | 2 |
| 21 | 155500035 | Washer | 2 | 2 | 2 | 2 |
| 22 | 155500034 | Spring | 1 | 1 | 1 | 1 |
| 23 | 155500033 | Push | 1 | 1 | 1 | 1 |
| 24 | 155560000 | Diff. Feed crank complete | 1 | 1 | 1 | 1 |
| 25 | 155560002 | Differential feed dog holder | 1 | 1 | 1 | 1 |
| 26 | 155560001 | Diff. feed crank | 1 | 1 | 1 | 1 |
| 27 | 155300017 | Screw | 1 | 1 | 1 | 1 |
| 28 | 155560003 | Cover for differential feed dog holder | 1 | 1 | 1 | 1 |
| 29 | S150217012 | Screw | 2 | 2 | 2 | 2 |
| 30 | 155500037 | Screw | 2 | 2 | 2 | 2 |
| 31 | 155500036 | Diff. Feed regulating link | 1 | 1 | 1 | 1 |
| 32 | 155500038 | Differential feed adjust link crank | 1 | 1 | 1 | 1 |
| 33 | 155300017 | Screw | 1 | 1 | 1 | 1 |
| 34 | 155500040 | Bush | 1 | 1 | 1 | 1 |
| 35 | S4A0604005 | O – type ring | 1 | 1 | 1 | 1 |
| 36 | 155500039 | Diff. feed regulating shaft | 1 | 1 | 1 | 1 |
| 37 | 155500041 | Diff. Feed regulating | 1 | 1 | 1 | 1 |
| 38 | 155500042 | Spring | 1 | 1 | 1 | 1 |
| 39 | 155500043 | Screw | 1 | 1 | 1 | 1 |
| 40 | 155500044 | Stopper plate | 2 | 2 | 2 | 2 |
| 41 | 155500045 | Differential stitch control | 1 | 1 | 1 | 1 |
| 42 | S150215010 | Screw | 2 | 2 | 2 | 2 |
| 43 | 028400044 | Washer | 1 | 1 | 1 | 1 |
| 44 | 155500046 | Nut | 1 | 1 | 1 | 1 |
| 45 | 155500047 | Screw | 1 | 1 | 1 | 1 |



jintex.in

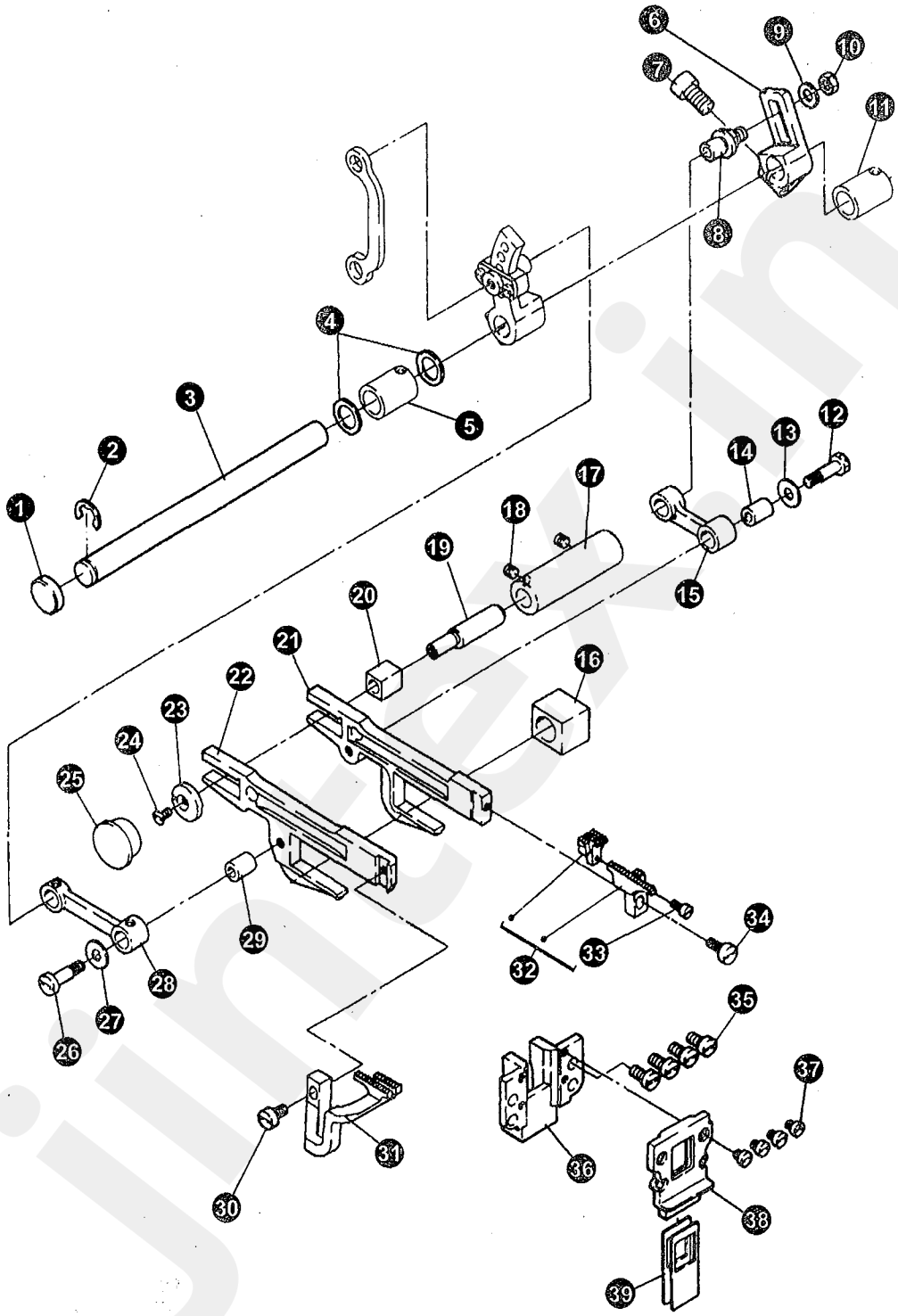
1
2
3
4
5
6
7
8
9
10
11
12
13
14
15
16
17
18
19
20
21
22
23
24
25
26
27
28
29
30
31
32
33
34
35
36
37
38
39



jintex.in

# 10. FEED DOG LIFT PART(2)

| No. | Ret. No. | Description | Qt | | | |
|---|---|---|---|---|---|---|
| | | | 3 | 4/4H | 5 | 5H |
| 1 | 028310001 | Oil seal | 1 | 1 | 1 | 1 |
| 2 | 060410014 | Retaining ring | 1 | 1 | 1 | 1 |
| 3 | 155500001 | Feed shaft | 1 | 1 | 1 | 1 |
| 4 | 155300006 | Washer | 2 | 2 | 2 | 2 |
| 5 | 155500003 | Left bush for feed shaft | 1 | 1 | 1 | 1 |
| 6 | 155500005 | Feed crank | 1 | 1 | 1 | 1 |
| 7 | 155300017 | Screw | 1 | 1 | 1 | 1 |
| 8 | 155500006 | Pin | 1 | 1 | 1 | 1 |
| 9 | 155500010 | Washer | 1 | 1 | 1 | 1 |
| 10 | S120503010 | Nut | 1 | 1 | 1 | 1 |
| 11 | 155500004 | Right bush for feed shaft | 1 | 1 | 1 | 1 |
| 12 | 028400023 | Screw | 1 | 1 | 1 | 1 |
| 13 | 155500010 | Washer | 1 | 1 | 1 | 1 |
| 14 | 028400021 | Roller for feed dog holder link | 1 | 1 | 1 | 1 |
| 15 | 155500008 | Link for feed dog holder | 1 | 1 | 1 | 1 |
| 16 | 155500019 | Slide block for feed dog | 1 | 1 | 1 | 1 |
| 17 | 155500014 | Eccentric shaft bush | 1 | 1 | 1 | 1 |
| 18 | B12400432 | Screw | 2 | 2 | 2 | 2 |
| 19 | 028400055 | Eccentric shaft | 1 | 1 | 1 | 1 |
| 20 | 155500012 | Slide block | 1 | 1 | 1 | 1 |
| 21 | 155510001 | Feed dog holder | 1 | 1 | 1 | 1 |
| 22 | 155510002 | Differential feed dog holder | 1 | 1 | 1 | 1 |
| 23 | 028400058 | Washer | 1 | 1 | 1 | 1 |
| 24 | 028400059 | Screw | 1 | 1 | 1 | 1 |
| 25 | 155500017 | Oil seal | 1 | 1 | 1 | 1 |



jintex.in

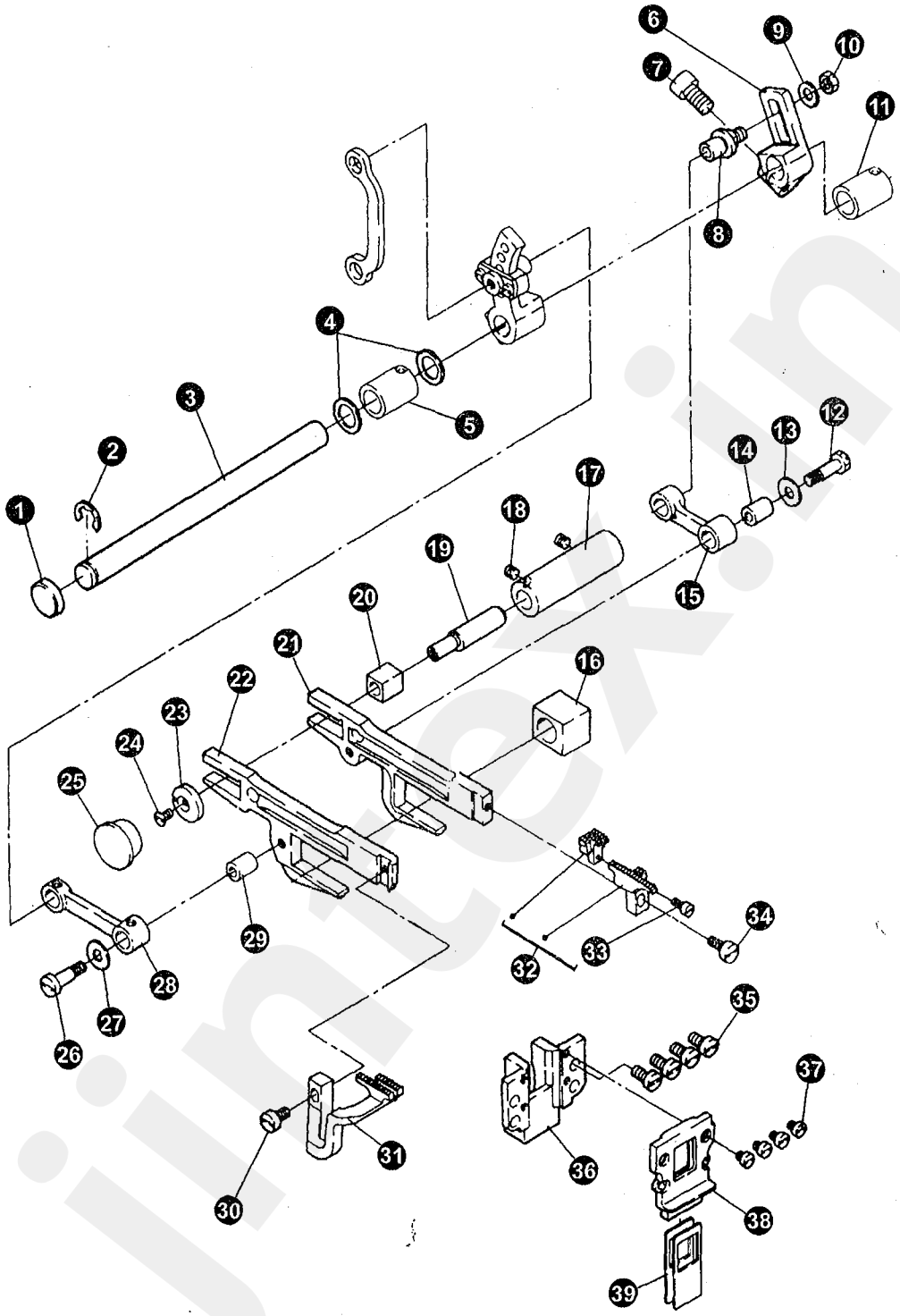
1
2
3
4
5
6
7
8
9
10
11
12
13
14
15
16
17
18
19
20
21
22
23
24
25
26
27
28
29
30
31
32
33
34
35
36
37
38
39



jintex.in

# 10. FEED DOG LIFT PART(2)

| No. | Ret. No. | Description | Qt 3 | 4/4H | 5 | 5H |
|---|---|---|---|---|---|---|
| 26 | 028400023 | Screw | 1 | 1 | 1 | 1 |
| 27 | 155500010 | Washer | 1 | 1 | 1 | 1 |
| 28 | 155500018 | Link for differential feed dog holder | 1 | 1 | 1 | 1 |
| 29 | 028400021 | Roller for feed dog holder link | 1 | 1 | 1 | 1 |
| 30 | 028200056 | Screw | | | 1 | 1 |
| | 028100027 | Screw | 1 | 1 | | |
| 31 | 155500021 | Differential feed dog | | | 1 | |
| | 155500050 | Differential feed dog | | | | 1 |
| | 160500001 | Differential feed dog | 1 | | | |
| | 159500001 | Differential feed dog | | 1 | | |
| | 159500001 | Differential feed dog | 1 | | | |
| 32 | 155580000 | Main feed dog complete | | | | 1 |
| | 155580001 | Main feed dog | | | | 1 |
| | 155520002 | Auxible feed dog | | | | 1 |
| 32 | 155520000 | Main feed dog complete | | | 1 | |
| | 155520001 | Main feed dog | | | 1 | |
| | 155520002 | Auxible feed dog | | | 1 | |
| 32 | 159510000 | Main feed dog complete | | 1 | | |
| | 159510001 | Main feed dog | | 1 | | |
| | 159510002 | Auxible feed dog | | 1 | | |
| 32 | 160510000 | Main feed dog complete | 1 | | | |
| | 160510001 | Mian feed dog | 1 | | | |
| | 159510000 | Main feed dog complete | 1 | | | |
| 33 | 028400004 | Screw | 1 | 1 | 1 | 1 |
| 34 | 028100027 | Screw | 1 | 1 | 1 | 1 |
| 35 | S150215001 | Screw | 4 | 4 | 4 | 4 |
| 36 | 155500023 | Differential feed guide bracket | 1 | 1 | 1 | 1 |
| 37 | S120202007 | Screw | 4 | 4 | 4 | 4 |
| 38 | 155500024 | Differential feed seal guide plate | 1 | 1 | 1 | 1 |
| 39 | 155500025 | Differential feed seal plate | 2 | 2 | 2 | 2 |



jintex.in

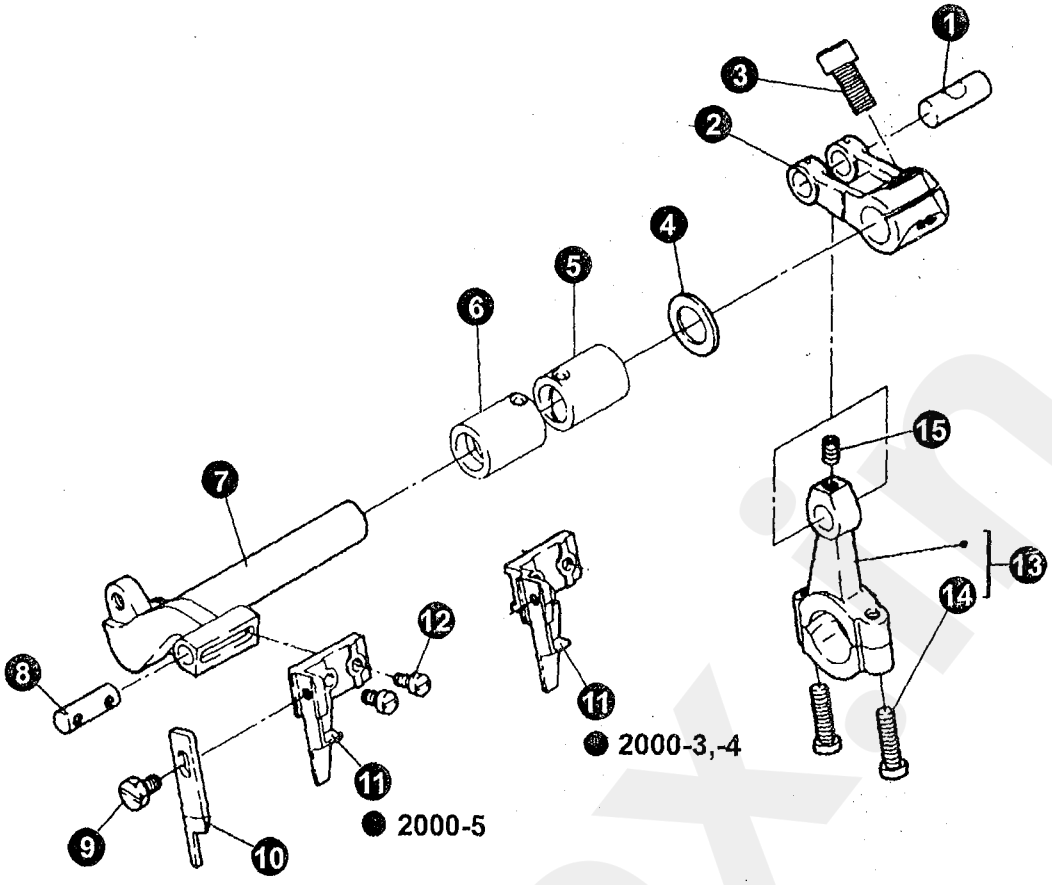
1
2
3
4
5
6
7
8
9
10
11
12
13
14
15
2000-3,-4
2000-5

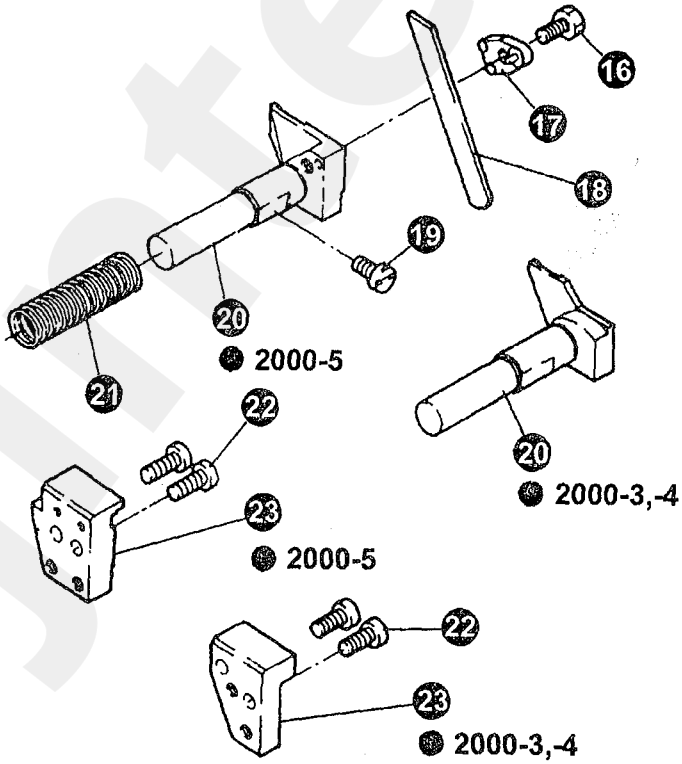
16
17
18
19
20
21
22
23
2000-5
2000-3,-4
2000-5
2000-3,-4



jintex.in

# 11. CUTTER DRIVE PARTS

| No. | Ret. No. | Description | Qt | | | |
|---|---|---|---|---|---|---|
| | | | 3 | 4/4H | 5 | 5H |
| 1 | 155300023 | Pin | 1 | 1 | 1 | 1 |
| 2 | 155600001 | Crank for upper cutter drive | 1 | 1 | 1 | 1 |
| 3 | 155300017 | Screw | 1 | 1 | 1 | 1 |
| 4 | 155600002 | Washer | 1 | 1 | 1 | 1 |
| 5 | 155600005 | Right bush for upper cutter bar | 1 | 1 | 1 | 1 |
| 6 | 155600004 | Left bush for upper cutter bar | 1 | 1 | 1 | 1 |
| 7 | 155600003 | Upper knife bar | 1 | 1 | 1 | 1 |
| 8 | 155600006 | Pin | | | 1 | 1 |
| | 159600001 | Pin | 1 | 1 | | |
| 9 | 155600013 | Screw | 1 | 1 | 1 | 1 |
| 10 | 155600008 | Upper knife | 1 | 1 | 1 | 1 |
| 11 | 159600002 | Upper knife holder | 1 | 1 | | |
| | 155600007 | Upper knife holder | | | 1 | 1 |
| 12 | B60350812 | Screw | 2 | 2 | 2 | 2 |
| 13 | 155610000 | Link for upper knife drive complete | 1 | 1 | 1 | 1 |
| 14 | B62401612 | Screw | 2 | 2 | 2 | 2 |
| 15 | S150225008 | Screw | 1 | 1 | 1 | 1 |
| 16 | 028300027 | Screw | 1 | 1 | 1 | 1 |
| 17 | 028500013 | Clamp for lower cutter | 1 | 1 | 1 | 1 |
| 18 | 159600004 | Lower knife | 1 | 1 | | |
| | 155600011 | Lower knife | | | 1 | 1 |
| 19 | S150215001 | Screw | 1 | 1 | 1 | 1 |
| 20 | 159600003 | Lower knife holder | 1 | 1 | | |
| | 155600009 | Lower knife holder | | | 1 | 1 |
| 21 | 155600010 | Spring | 1 | 1 | 1 | 1 |
| 22 | S150215010 | Screw | 2 | 2 | 2 | 2 |
| 23 | 155600012 | Needle guard holder | | | 1 | 1 |
| | 159600005 | Needle guard holder | 1 | 1 | | |



jintex.in

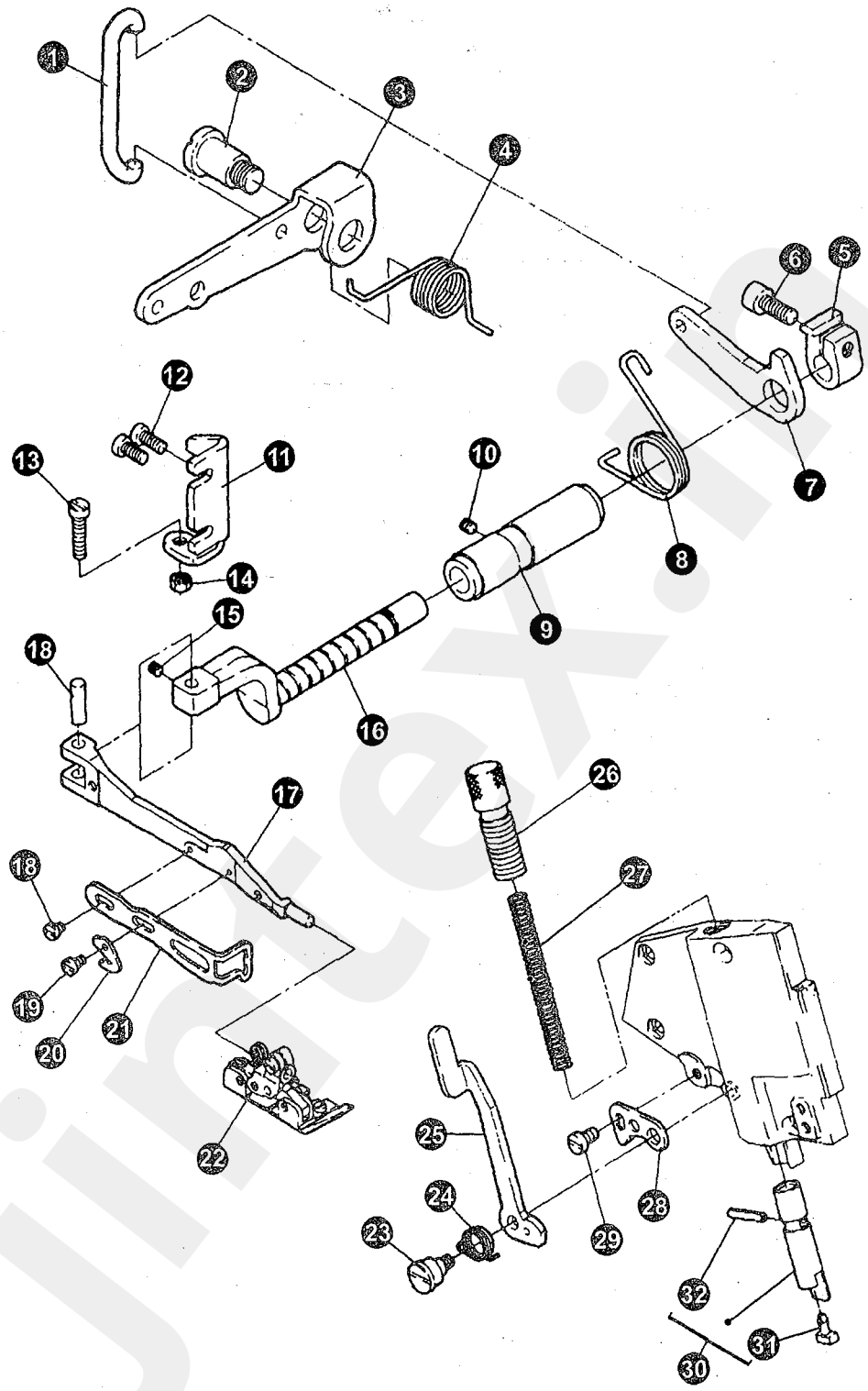
1
2
3
4
5
6
7
8
9
10
11
12
13
14
15
16
17
18
18
19
20
21
22
23
24
25
26
27
28
29
30
31
32



jintex.in

## 12. PRESSER FOOT LIFT PARTS(1)

| No. | Ret. No. | Description | Qt | | | |
|---|---|---|---|---|---|---|
| | | | 3 | 4/4H | 5 | 5H |
| 1 | 155800011 | Link for foot lift lever | 1 | 1 | 1 | 1 |
| 2 | 155800010 | Screw | 1 | 1 | 1 | 1 |
| 3 | 155800008 | Foot lift lever | 1 | 1 | 1 | 1 |
| 4 | 155800009 | Spring | 1 | 1 | 1 | 1 |
| 5 | 155800007 | Set collar for foot lift shaft | 1 | 1 | 1 | 1 |
| 6 | 155300017 | Screw | 1 | 1 | 1 | 1 |
| 7 | 155800005 | Lever | 1 | 1 | 1 | 1 |
| 8 | 155800006 | Spring | 1 | 1 | 1 | 1 |
| 9 | 155800004 | Bush for presser foot lift | 1 | 1 | 1 | 1 |
| 10 | B12400432 | Screw | 1 | 1 | 1 | 1 |
| 11 | 155800012 | Stopper plate | 1 | 1 | 1 | 1 |
| 12 | S150215009 | Screw | 2 | 2 | 2 | 2 |
| 13 | S150215013 | Screw | 1 | 1 | 1 | 1 |
| 14 | S120503010 | Nut | 1 | 1 | 1 | 1 |
| 15 | S120210015 | Screw | 1 | 1 | 1 | 1 |
| 16 | 155800003 | Press arm shaft | 1 | 1 | 1 | 1 |
| 17 | 155800001 | Press arm | 1 | 1 | 1 | 1 |
| 18 | 155800002 | Press arm pin | 1 | 1 | 1 | 1 |
| | S120202004 | Screw | 1 | 1 | 1 | 1 |
| 19 | S120202007 | Screw | 1 | 1 | 1 | 1 |
| 20 | 155800020 | Knife | 1 | 1 | 1 | 1 |
| 21 | 159700001 | Finger guard | 1 | 1 | | |
| | 155800019 | Finger guard | | | 1 | 1 |
| 22 | 160710000 | Presser foot complete | 1 | | | |
| | 160730000 | Presser foot complete | 1 | | | |
| | 159710000 | Presser foot complete | | 1 | | |
| | 039720000 | Presser foot complete | | | 1 | |
| | 77T7 -001A | Presser foot complete | | | | 1 |
| 23 | 155800018 | Screw | 1 | 1 | 1 | 1 |
| 24 | 155800017 | Spring | 1 | 1 | 1 | 1 |
| 25 | 155800016 | Press bar lifter | 1 | 1 | 1 | 1 |
| 26 | 155800013 | Screw | 1 | 1 | 1 | 1 |
| 27 | 155800014 | Spring | 1 | 1 | 1 | 1 |
| 28 | 155800015 | Press arm stopper | 1 | 1 | 1 | 1 |
| 29 | S150215008 | Screw | 1 | 1 | 1 | 1 |
| 30 | 155810000 | Presser bar complete | 1 | 1 | 1 | 1 |
| 31 | 155810002 | Cushion | 1 | 1 | 1 | 1 |
| 32 | S150446011 | Spring pin | 1 | 1 | 1 | 1 |



jintex.in

● 2000-5 (5x5)

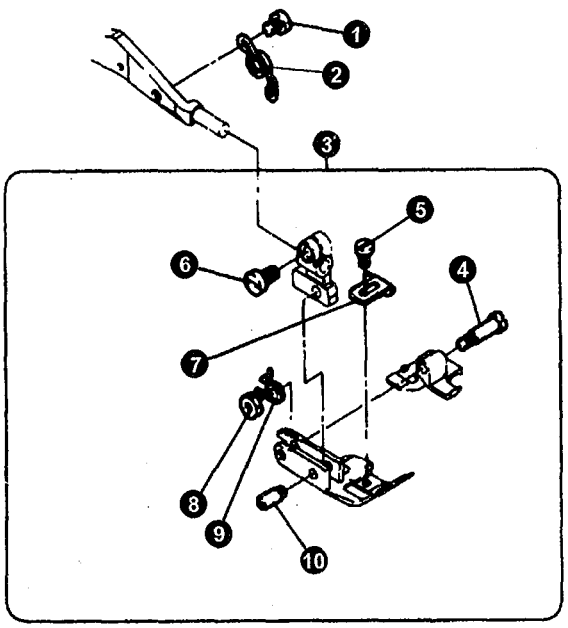


● 2000-5H

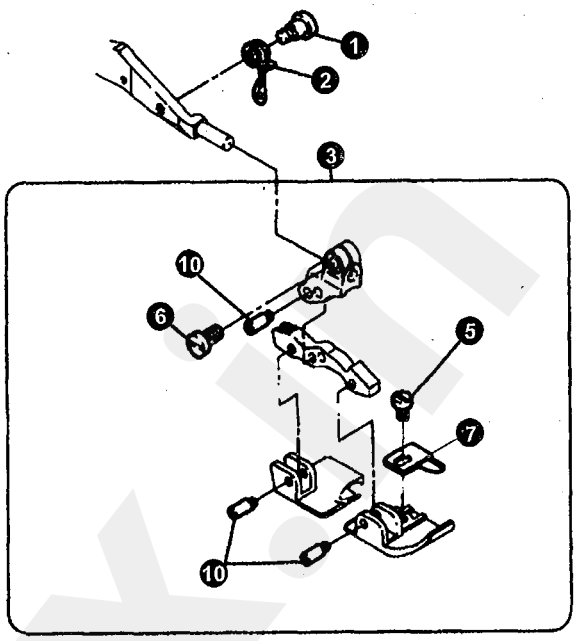


● 2000-3,-4

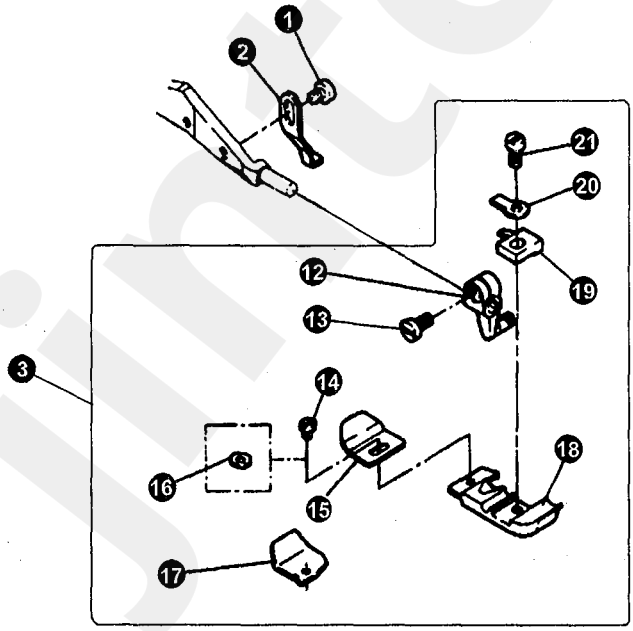




jintex.in

# 13. PRESSER FOOT LIFT PARTS(2)

| No. | Ret. No. | Description | Qt | | | |
|---|---|---|---|---|---|---|
| | | | 3 | 4/4H | 5 | 5H |
| 1 | S120202004 | Screw | | | 1 | |
| 2 | 155800021 | Spring | | | 1 | |
| 3 | 039720000 | Presser foot complete | | | 1 | |
| | 39T7 -003B2 | Main presser foot | | | 1 | |
| | 39T7 -003B3 | Auxible presser foot | | | 1 | |
| | 39T7 -003B1 | Bracket for presser foot | | | 1 | |
| 4 | 39T7 -001A3 | Screw | | | 1 | |
| 5 | 39T7 -001A6 | Screw | | | 1 | |
| 6 | 28T1 -007 | Screw | | | 1 | |
| 7 | 39T7 -001A5 | Fabric guard | | | 1 | |
| 8 | 39T7 -001A4 | Screw | | | 1 | |
| 9 | 39T7 -001A10 | Spring | | | 1 | |
| 10 | 77T7 -001A4 | Pin | | | 1 | |
| 1 | 155A20006 | Screw | | | | 1 |
| 2 | 155800025 | Spring | | | | 1 |
| 3 | 77T7 -001A | Presser foot complete | | | | 1 |
| | 77T7 -001A1 | Main presser foot | | | | 1 |
| | 77T7 -001A2 | Aauxible presser foot | | | | 1 |
| | 77T7 -001A3 | Bracket for presser foot | | | | 1 |
| | 77T7 -001A5 | Link for presser foot | | | | 1 |
| 5 | 6A2 -14 | Screw | | | | 1 |
| 6 | 28T1 -007 | Screw | | | | 1 |
| 7 | 77T7 -001A6 | Fabric guard | | | | 1 |
| 10 | 77T7 -001A4 | Pin | | | | 3 |
| 1 | S120202004 | Screw | 1 | 1 | | |
| 2 | 159700002 | Stopper | 1 | 1 | | |
| 3 | 159710000 | Presser foot complete | | 1 | | |
| 12 | 159710007 | Bracket for presser foot | 1 | 1 | | |
| 13 | 028100007 | Screw | 1 | 1 | | |
| 14 | 39T7 -001A6 | Screw | 1 | 1 | | |
| 15 | 28T6 -019A1 | Presser foot fitting piece | 1 | | | |
| 16 | GB97 -76 | Washer | | 1 | | |
| 17 | 159710002 | Presser foot fitting piece | | 1 | | |
| 18 | 159710001 | Main presser foot | | 1 | | |
| 19 | 159710006 | Guide | | 1 | | |
| 20 | 159710005 | Set presser for presser foot | 1 | 1 | | |
| 21 | 28T1 -041 | Screw | 1 | 1 | | |
| 3 | 160710000 | Presser foot complete | 1 | | | |
| | 160730000 | Presser foot complete | 1 | | | |



jintex.in

● 2000-5

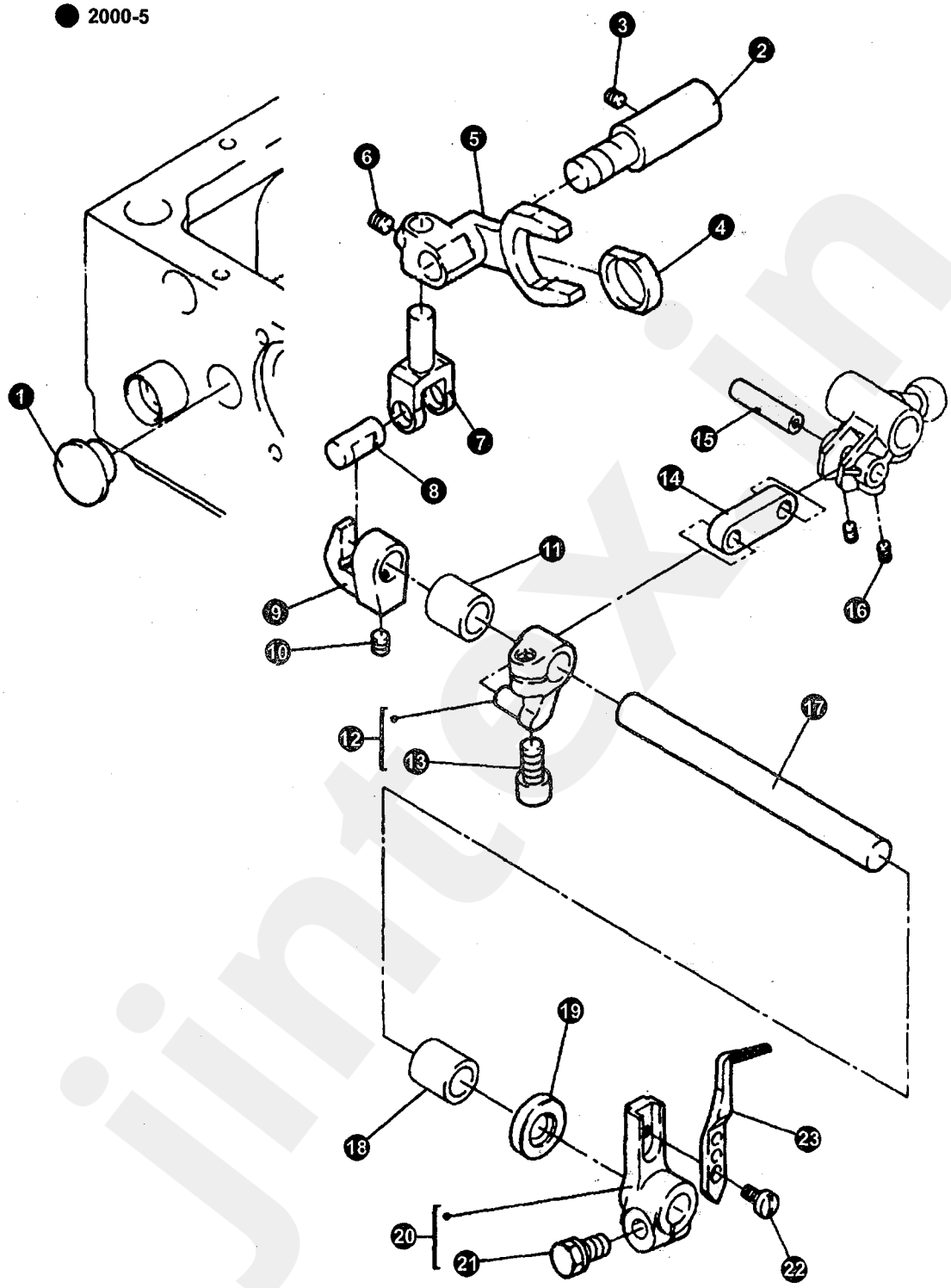




jintex.in

# 14. FRONT LOOPER PARTS(1)

| No. | Ret. No. | Description | Qt | | | |
|---|---|---|---|---|---|---|
| | | | 3 | 4/4H | 5 | 5H |
| 1 | 155500017 | Rubber cap | | | 1 | 1 |
| 2 | 155700003 | Pin shaft | | | 1 | 1 |
| 3 | B12500532 | Screw | | | 1 | 1 |
| 4 | 155700002 | Sliding bush | | | 1 | 1 |
| 5 | 155700001 | Fork | | | 1 | 1 |
| 6 | B12500532 | Screw | | | 1 | 1 |
| 7 | 155700004 | Connector | | | 1 | 1 |
| 8 | 155700005 | Pin | | | 1 | 1 |
| 9 | 155700006 | Slide block holder | | | 1 | 1 |
| 10 | B12500532 | Screw | | | 1 | 1 |
| 11 | 155700008 | Bush | | | 1 | 1 |
| 12 | 155700010 | Crank for front looper | | | 1 | 1 |
| 13 | 155300017 | Screw | | | 1 | 1 |
| 14 | 039400009 | Link for front looper | | | 1 | 1 |
| 15 | 039400010 | Pin | | | 1 | 1 |
| 16 | S150237030 | Screw | | | 2 | 2 |
| 17 | 155700007 | Shaft for looper drive | | | 1 | 1 |
| 18 | 155700008 | Bush | | | 1 | 1 |
| 19 | 028330001 | Oil seal | | | 1 | 1 |
| 20 | 155710000 | Front looper holder complete | | | 1 | |
| | 155730000 | Front looper holder complete | | | | 1 |
| 21 | 155400010 | Screw | | | 1 | 1 |
| 22 | 006300018 | Screw | | | 1 | 1 |
| 23 | 155710002 | Front looper | | | 1 | |
| | 155730001 | Front looper | | | | 1 |



jintex.in

● 2000-5

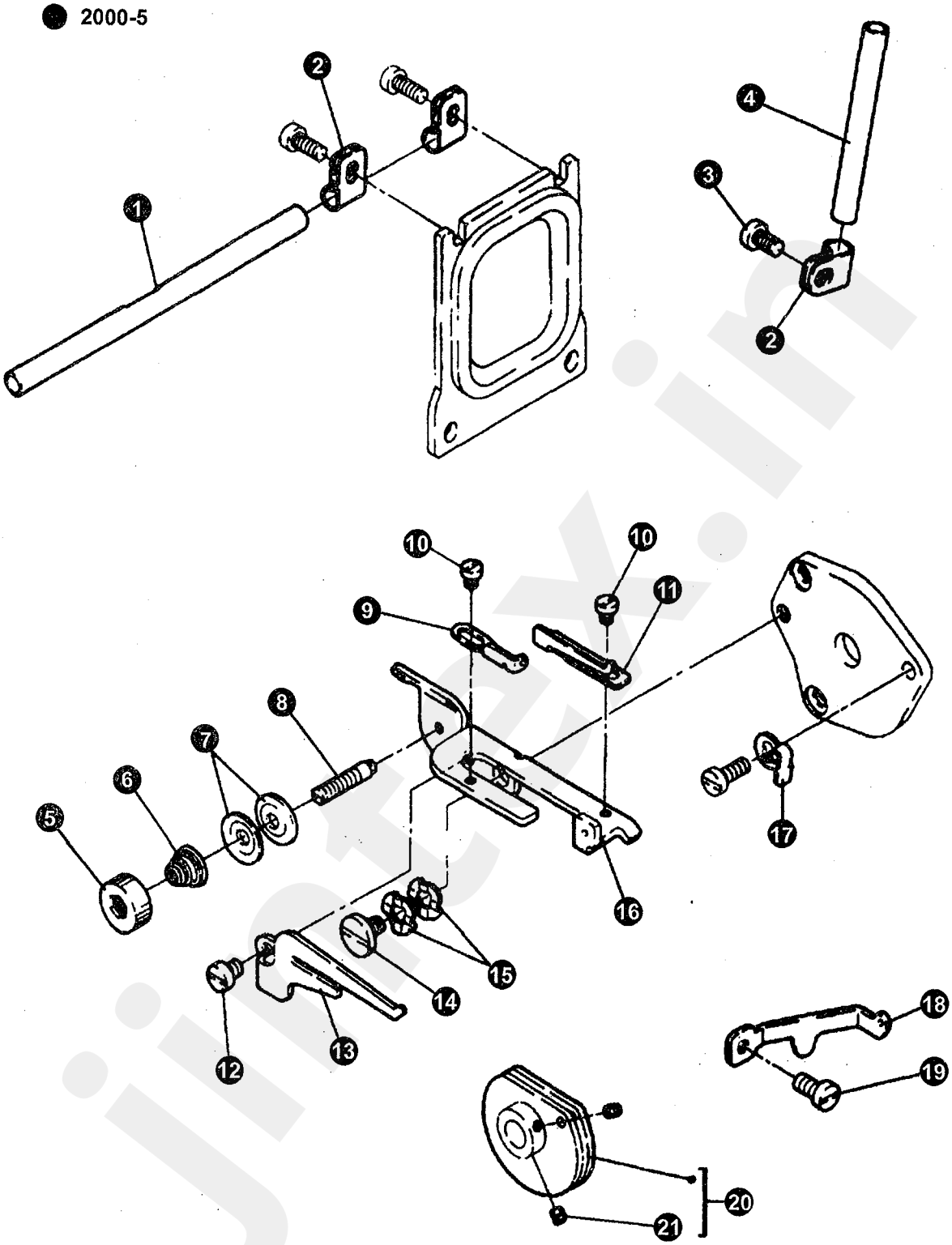




jintex.in

# 15. FRONT LOOPER PARTS(2)

| No. | Ret. No. | Description | Qt | | | |
|---|---|---|---|---|---|---|
| | | | 3 | 4/4H | 5 | 5H |
| 1 | 039400037 | Long thread pipe | | | 1 | 1 |
| 2 | 116250002 | Tube clamp | | | 3 | 3 |
| 3 | S150215001 | Screw | | | 1 | 1 |
| 4 | 155A00011 | Short thread pipe | | | 1 | 1 |
| 5 | 155A41000 | Nut | | | 1 | 1 |
| 6 | 039400042 | Spring | | | 1 | 1 |
| 7 | 039400041 | Thread guide disc | | | 2 | 2 |
| 8 | 155A40004 | Screw | | | 1 | 1 |
| 9 | 155A40003 | Left thread guide | | | 1 | 1 |
| 10 | S150217009 | Screw | | | 2 | 2 |
| 11 | 155A40002 | Right thread guide | | | 1 | 1 |
| 12 | S150215007 | Screw | | | 1 | 1 |
| 13 | 155A00009 | Thread guide plate | | | 1 | 1 |
| 14 | 155100024 | Screw | | | 1 | 1 |
| 15 | 155100025 | Washer | | | 2 | 2 |
| 16 | 155A40001 | Lower thread guide bracket | | | 1 | 1 |
| 17 | 155A00010 | Spring | | | 1 | 1 |
| 18 | 155A00008 | Thread guide plate | | | 1 | 1 |
| 19 | S150215001 | Screw | | | 1 | 1 |
| 20 | 039410N | Thread takeup cam complete | | | 1 | 1 |
| 21 | 182610010 | Screw | | | 2 | 2 |



jintex.in

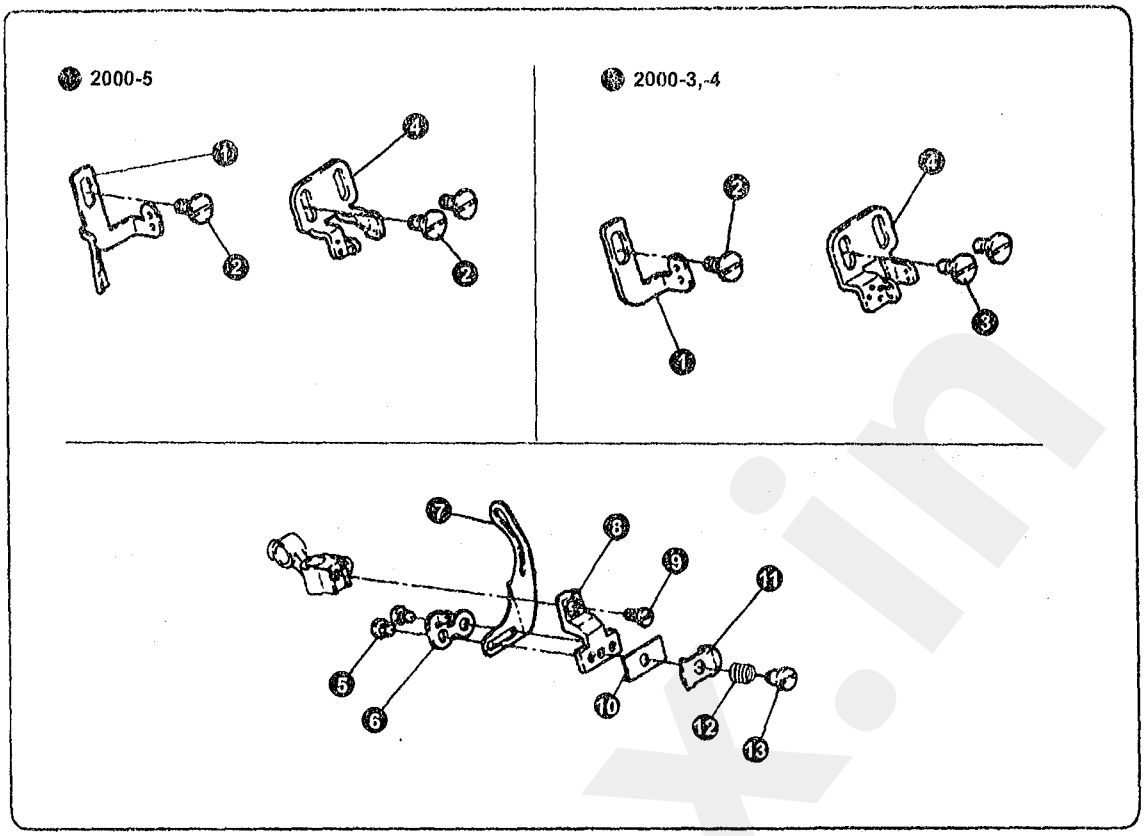


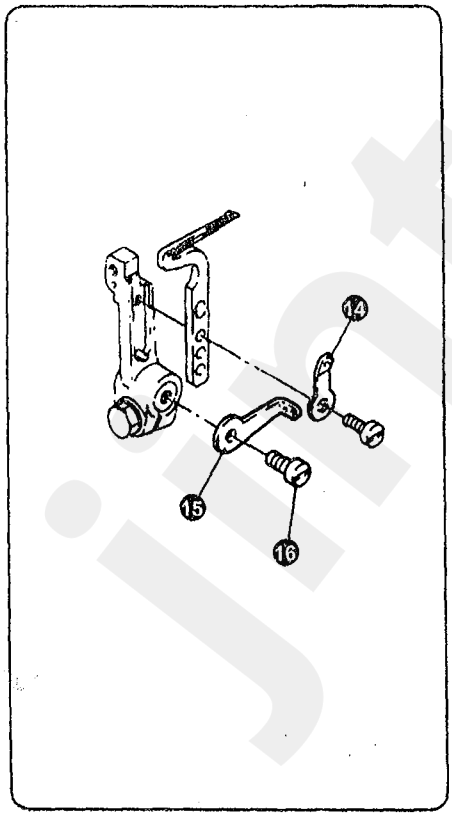

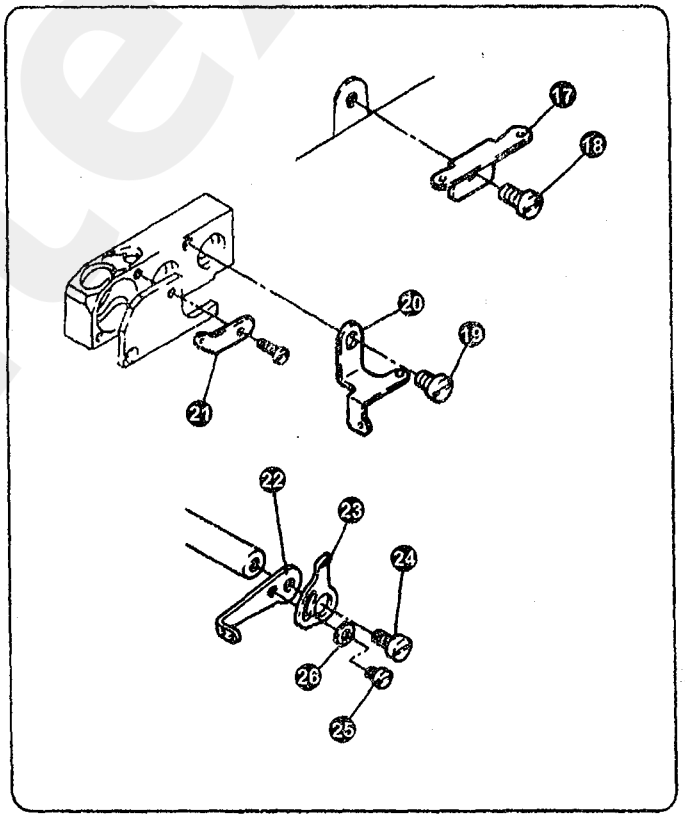

jintex.in



jintex.in

# 16. THREAD EYELETS(1)

| No. | Ret. No. | Description | Qt | | | |
|---|---|---|---|---|---|---|
| | | | 3 | 4/4H | 5 | 5H |
| 1 | 159900002 | Needle thread guide plate | 1 | 1 | | |
| | 155A00002 | Needle thread guide plate | | | 1 | 1 |
| 2 | 155100034 | Screw | 3 | 3 | 3 | 3 |
| 4 | 159900001 | Thread guide plate for thread takeup plate | 1 | 1 | | |
| | 155A00001 | Thread guide plate for thread takeup plate | | | 1 | 1 |
| | 155A20000 | Thread takeup lever complete | | | 1 | 1 |
| | 159910000 | Thread takeup lever complete | 1 | 1 | | |
| 5 | S150217008 | Screw | 2 | 2 | 2 | 2 |
| 6 | 155A20007 | Thread guide | | | 1 | 1 |
| 7 | 155A20002 | Thread takeup lever | 1 | 1 | 1 | 1 |
| 8 | 155A20001 | Thread takeup lever bracket | 1 | 1 | 1 | 1 |
| 9 | S120203019 | Screw | 1 | 1 | 1 | 1 |
| 10 | 155A20004 | Bracket | 1 | 1 | 1 | 1 |
| 11 | 155A20003 | Thread retaining plate | | | 1 | 1 |
| | 159910001 | Thread retaining plate | 1 | 1 | | |
| 12 | 155A20005 | Spring | 1 | 1 | 1 | 1 |
| 13 | 155A20006 | Screw | 1 | 1 | 1 | 1 |
| 14 | 155450003 | Thread guide | 1 | 1 | 1 | 1 |
| 15 | 155A00003 | Thread guide plate | 1 | 1 | 1 | 1 |
| 16 | S150215008 | Screw | 1 | 1 | 1 | 1 |
| 17 | 155A00004 | Thread guide | 1 | 1 | 1 | 1 |
| 18 | S150215001 | Screw | 1 | 1 | 1 | 1 |
| 19 | S150215008 | Screw | 2 | 2 | 2 | 2 |
| 20 | 155A00005 | Thread guide plate | 1 | 1 | 1 | 1 |
| 21 | 155400018 | Thread guide | 1 | 1 | 1 | 1 |
| 22 | 155A00006 | Upper looper thread takeup(big) | 1 | 1 | 1 | 1 |
| 23 | 155A00007 | Upper looper thread takeup(small) | 1 | 1 | 1 | 1 |
| 24 | S150215001 | Screw | 1 | 1 | 1 | 1 |
| 25 | S120202004 | Screw | 1 | 1 | 1 | 1 |
| 26 | S8A3103003 | Washer | 1 | 1 | 1 | 1 |



jintex.in

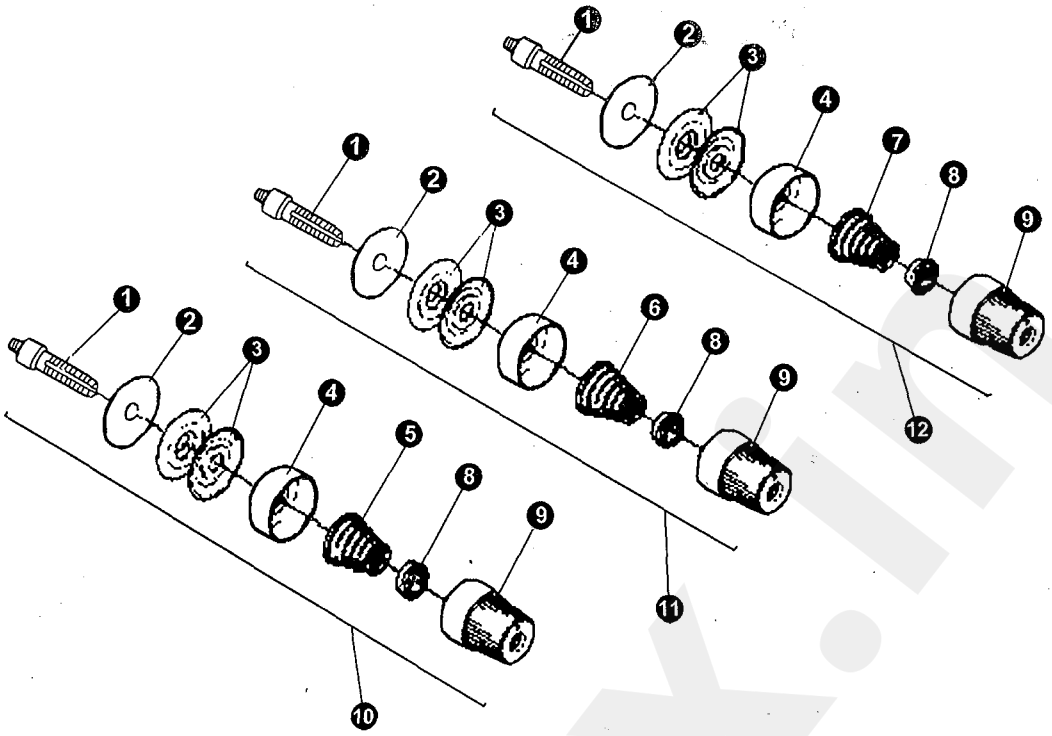

## 2000-3

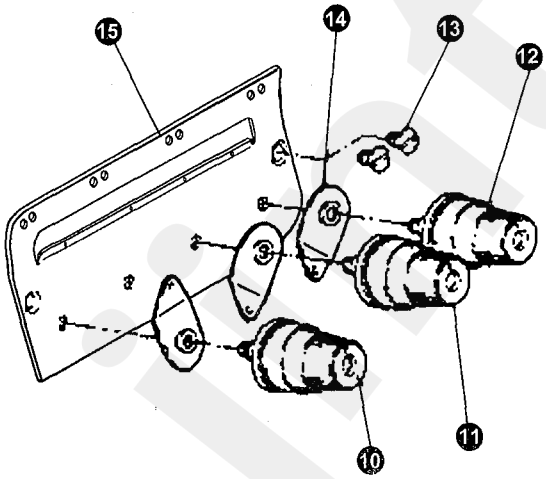

## 2000-4,-5

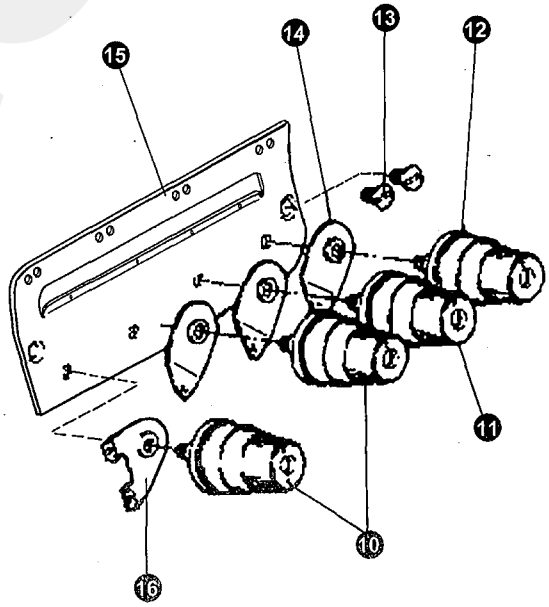

jintex.in



jintex.in

# 17. THREAD EYELETS(2)

| No. | Ret. No. | Description | Qt | | | |
|---|---|---|---|---|---|---|
| | | | 3 | 4/4H | 5 | 5H |
| 1 | 155A10003 | Post | 3 | 4 | 4 | 4 |
| 2 | 28T2 -060H7 | Felt | 3 | 4 | 4 | 4 |
| 3 | 22T1 -012F5 | Tension disc. | 6 | 8 | 8 | 8 |
| 4 | 155A10008 | Cup | 3 | 4 | 4 | 4 |
| 5 | 155A10005 | Tension spring | 1 | 2 | 2 | 2 |
| 6 | 155A10004 | Tension spring(upper looper) | 1 | 1 | 1 | 1 |
| 7 | 155A10006 | Tension spring(lower looper) | 1 | 1 | 1 | 1 |
| 8 | 155A10007 | Spring bushing | 3 | 4 | 4 | 4 |
| 9 | 155A10009 | Post nut | 3 | 4 | 4 | 4 |
| 10 | | Tension nut complete | 1 | 2 | 2 | 2 |
| 11 | | Tension nut complete(upper looper) | 1 | 1 | 1 | 1 |
| 12 | | Tension nut complete(lower looper) | 1 | 1 | 1 | 1 |
| 13 | 116400008 | Screw | 2 | 2 | 2 | 2 |
| 14 | 28T2 -060H8 | Tension guide plate | 3 | 3 | 3 | 3 |
| 15 | 155A10000 | Thread guide plate complete | | 1 | 1 | 1 |
| | 160910000 | Thread guide plate complete | 1 | | | |
| 16 | 155A10002 | Thread guide plate | | 1 | 1 | 1 |



jintex.in

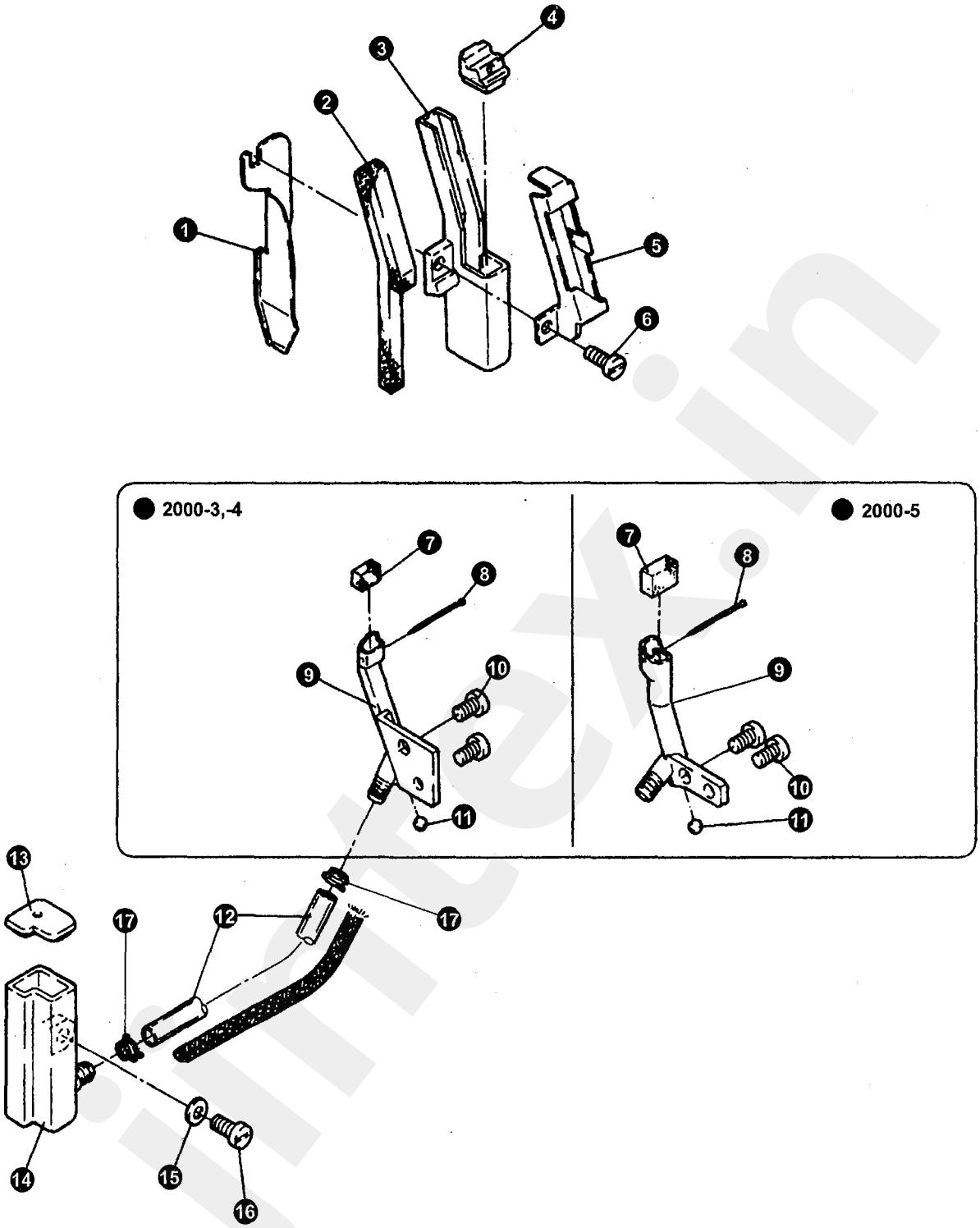




jintex.in

# 18. LUBRICATING PARTS(1)

| No. | Ret. No. | Description | Qt | | | |
|---|---|---|---|---|---|---|
| | | | 3 | 4/4H | 5 | 5H |
| 1 | 155900019 | Oil guide | 1 | 1 | 1 | 1 |
| 2 | 155920003 | Oil felt | 1 | 1 | 1 | 1 |
| 3 | 155920001 | Upper silicone oil reservoir | 1 | 1 | 1 | 1 |
| 4 | 155920002 | Cover for upper silicone oil reservoir | 1 | 1 | 1 | 1 |
| 5 | 155900018 | Thread guide | 1 | 1 | 1 | 1 |
| 6 | S150215009 | Screw | 1 | 1 | 1 | 1 |
| 7 | 155930002 | Felt | | | 1 | 1 |
| | 155930003 | Felt | | | 1 | 1 |
| | 159810002 | Felt | 1 | 1 | | |
| 8 | | Pin | 1 | 1 | 1 | 1 |
| 9 | 159810001 | Needle cooler | 1 | 1 | | |
| | 155930001 | Needle cooler | | | 1 | 1 |
| 10 | S150215001 | Screw | 2 | 2 | 2 | 2 |
| 11 | S8A3105006 | Ball plug | 1 | 1 | 1 | 1 |
| 12 | 155900020 | Oil tube | 1 | 1 | 1 | 1 |
| 13 | 155900023 | Cover for upper silicone oil reservoir | 1 | 1 | 1 | 1 |
| 14 | 155900022 | Cover for upper silicone oil reservoir | 1 | 1 | 1 | 1 |
| 15 | S8A3103003 | Washer | 1 | 1 | 1 | 1 |
| 16 | S150215009 | Screw | 1 | 1 | 1 | 1 |
| 17 | 028700011 | Pipe clamp | 2 | 2 | 2 | 2 |



jintex.in

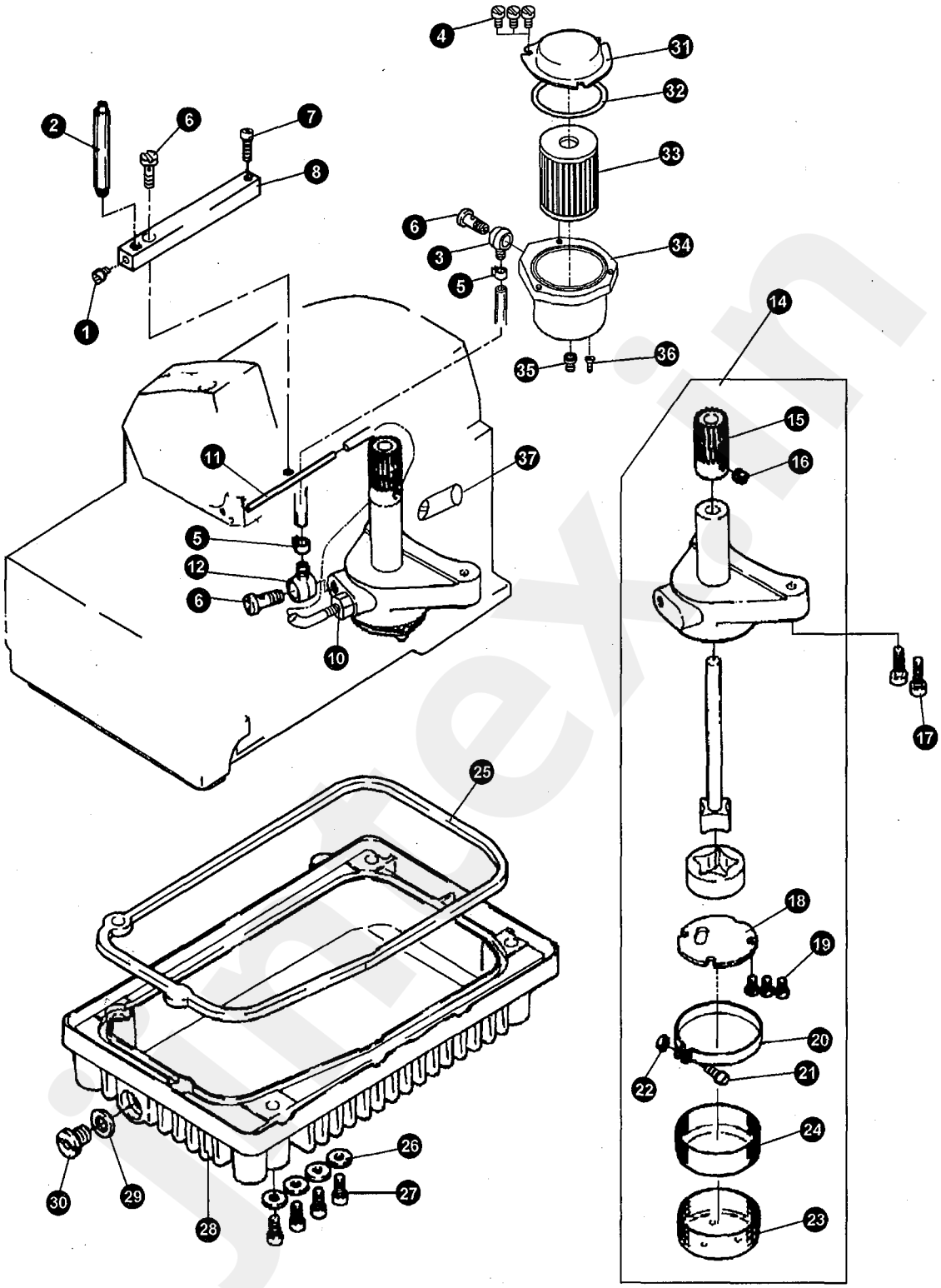
4
31
32
2
6
7
8
33
6
3
34
5
1
14
35
36
15
16
11
37
5
12
6
10
17
25
18
19
20
22
21
24
26
30
29
27
28
23



jintex.in

# 19. LUBRICATING PARTS(2)

| No. | Ret. No. | Description | Qt | | | |
|---|---|---|---|---|---|---|
| | | | 3 | 4/4H | 5 | 5H |
| 1 | S150215007 | Screw | 1 | 1 | 1 | 1 |
| 2 | 155900007 | Oil pipe for oil gauhe window | 1 | 1 | 1 | 1 |
| 3 | 028700010 | Oil splash connector | 2 | 2 | 2 | 2 |
| 4 | S150237007 | Screw | 3 | 3 | 3 | 3 |
| 5 | 028700011 | Oil splash connecto clamp | 2 | 2 | 2 | 2 |
| 6 | 155900005 | Screw | 3 | 3 | 3 | 3 |
| 7 | S150215005 | Screw | 1 | 1 | 1 | 1 |
| 8 | 155900006 | Oil distributor | 1 | 1 | 1 | 1 |
| 10 | 155900010 | Oil return pipe connector | 1 | 1 | 1 | 1 |
| 11 | 155900008 | Bronze oil pipe | 1 | 1 | 1 | 1 |
| 14 | 155940000 | Pump complete | 1 | 1 | 1 | 1 |
| 15 | 155910001 | Worm wheel | 1 | 1 | 1 | 1 |
| 16 | B12500532 | Screw | 1 | 1 | 1 | 1 |
| 17 | S150220003 | Screw | 2 | 2 | 2 | 2 |
| 18 | 155940002 | Cover for oil pump | 1 | 1 | 1 | 1 |
| 19 | S150217010 | Screw | 3 | 3 | 3 | 3 |
| 20 | 155910006 | Oil filter flange | 1 | 1 | 1 | 1 |
| 21 | S150217012 | Screw | 1 | 1 | 1 | 1 |
| 22 | S150559001 | Screw | 1 | 1 | 1 | 1 |
| 23 | 155910004 | Oil filter | 1 | 1 | 1 | 1 |
| 24 | 155910005 | Oil filter | 1 | 1 | 1 | 1 |
| 25 | 155900013 | Packing | 1 | 1 | 1 | 1 |
| 26 | 155900017 | Washer | 4 | 4 | 4 | 4 |
| 27 | S150220015 | Screw | 4 | 4 | 4 | 4 |
| 28 | 155900012 | Oil reservoir | 1 | 1 | 1 | 1 |
| 29 | 28T7 – 025H | Packing | 1 | 1 | 1 | 1 |
| 30 | 028700026 | Screw | 1 | 1 | 1 | 1 |
| 31 | 155900031 | The cover of oil basin | 1 | 1 | 1 | 1 |
| 32 | 155900032 | Rubber ring | 1 | 1 | 1 | 1 |
| 33 | 028770001 | Filter | 1 | 1 | 1 | 1 |
| 34 | 155900030 | Oil basin | 1 | 1 | 1 | 1 |
| 35 | 155900033 | Oil storage connector | 1 | 1 | 1 | 1 |
| 36 | S150218015 | Screw | 1 | 1 | 1 | 1 |
| 37 | 155900027 | Oil level gauge | 1 | 1 | 1 | 1 |

## The check of the filter fixs and replace

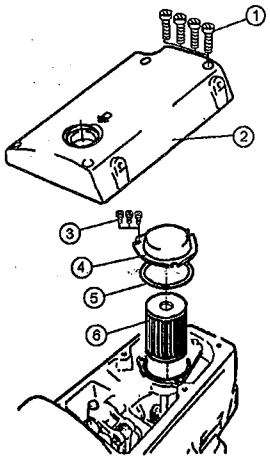


Turn off the power before checking filter and replacing, You´d better appeal for aid to a professional technical person.

If the filter is jammed by debrics, oil circulation will be break off. For the sake of working order, please clean up the trash or change a new one each 6 months.

As shown on the right, fixed disassembly order of filter likes this:

1. Top cove
2. Screw
3. The cover of oil basin
4. Rubber ring
5. Filter
6. Check the filer , if the filter has been dilapidate, replace it.



jintex.in

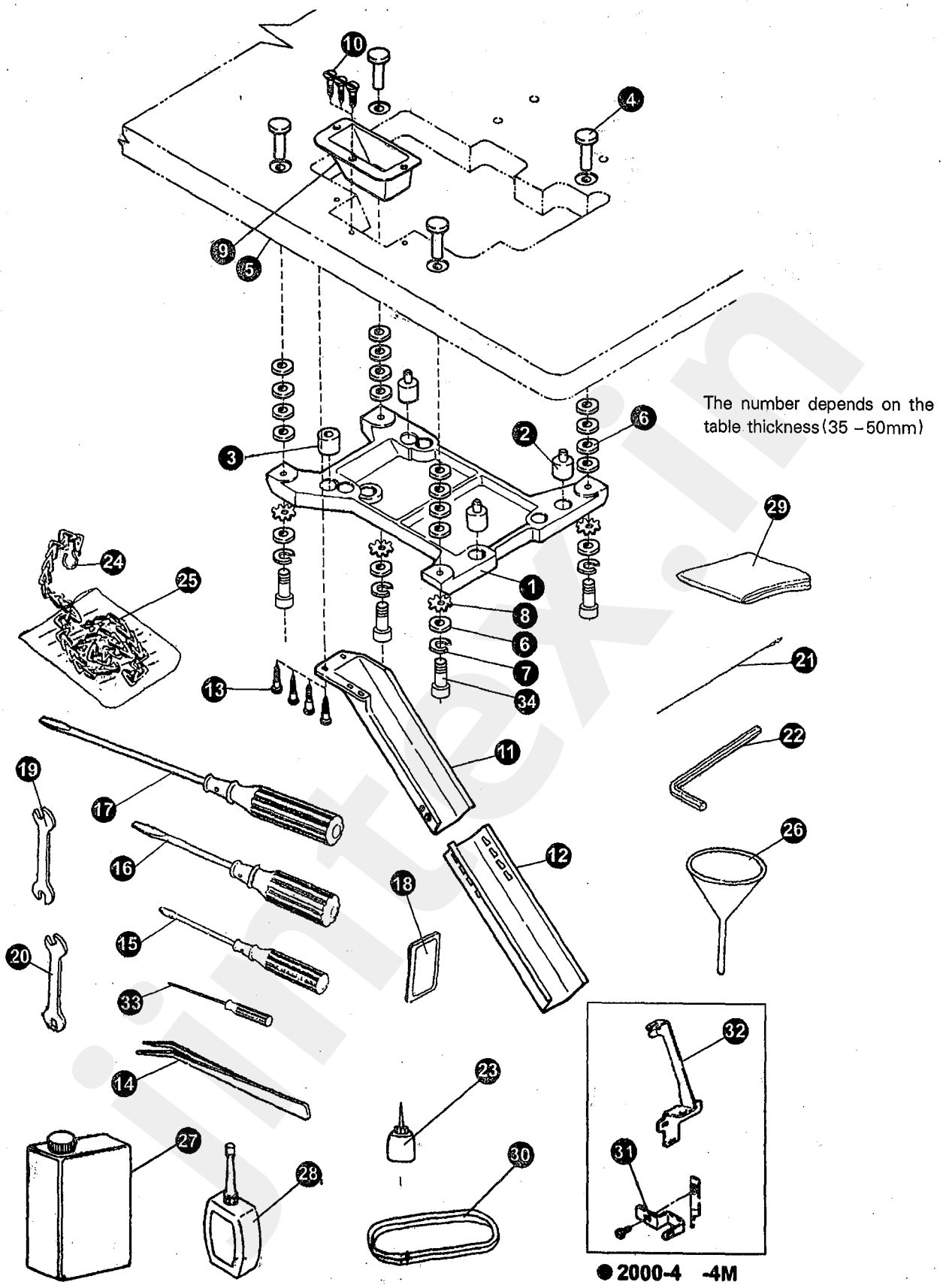




jintex.in

## 20. ACCESSORIES

| No. | Ret. No. | Description | Qt | | | |
|---|---|---|---|---|---|---|
| | | | 3 | 4/4H | 5 | 5H |
| 1 | 28T8 – 001 | Machine rest board | 1 | 1 | 1 | 1 |
| 2 | 28T8 – 004A | Rubber cushion | 3 | 3 | 3 | 3 |
| 3 | 28T8 – 005 | Rubber cushion | 1 | 1 | 1 | 1 |
| 4 | 28T8 – 002 | Bolt | 4 | 4 | 4 | 4 |
| 5 | 155F00001 | Table | 1 | 1 | 1 | 1 |
| 6 | 110F10008 | Rubber cushion | 20 | 20 | 20 | 20 |
| 7 | S150630001 | Washer | 4 | 4 | 4 | 4 |
| 8 | S150671001 | Washer | 4 | 4 | 4 | 4 |
| 9 | 28T8 – 006 | Wastes chute mouth | 1 | 1 | 1 | 1 |
| 10 | GB100 – 76 | Screw | 3 | 3 | 3 | 3 |
| 11 | 28T8 – 007 | Wastes chute(upper) | 1 | 1 | 1 | 1 |
| 12 | 28T8 – 008 | Wastes chute(lower) | 1 | 1 | 1 | 1 |
| 13 | GB99 – 76 | screw | 4 | 4 | 4 | 4 |
| 14 | | Tweezer | 1 | 1 | 1 | 1 |
| 15 | | Screwdriver(S) | 1 | 1 | 1 | 1 |
| 16 | | Screwdriver(M) | 1 | 1 | 1 | 1 |
| 17 | | Screwdriver(B) | 1 | 1 | 1 | 1 |
| 18 | DC × 27 | Needle | 1 | 1 | 1 | 1 |
| 19 | | Double open – end wrench | 1 | 1 | 1 | 1 |
| 20 | 39T10 – 005 | Double open – end | | | 1 | 1 |
| 21 | 39T10 – 001 | Threading wire | | | 1 | 1 |
| 22 | | Hey key6 | 1 | 1 | 1 | 1 |
| | | Hex key5 | 1 | 1 | 1 | 1 |
| | | Hex key3 | 1 | 1 | 1 | 1 |
| | | Hex key2. 5 | 1 | 1 | 1 | 1 |
| | | Hex key2 | 1 | 1 | 1 | 1 |
| 23 | | Silicon oil pot | 1 | 1 | 1 | 1 |
| 24 | | Chain looper | 2 | 2 | 2 | 2 |
| 25 | | Chain | 50 | 50 | 50 | 50 |
| 26 | | Funnel | 1 | 1 | 1 | 1 |
| 27 | 155F00002 | Oil can | 1 | 1 | 1 | 1 |
| 28 | 22T9 – 001 | Oil pot | 1 | 1 | 1 | 1 |
| 29 | | Vinyl cover | 1 | 1 | 1 | 1 |
| 30 | GB1171 – 74 | Belt | 1 | 1 | 1 | 1 |
| 31 | 159F00001 | Tape guide holder(upper) | | 1 | | |
| 32 | 159F00002 | Tape guide holder(lower) | | 1 | | |
| 33 | 110F00005 | Hndled hex driver | 1 | 1 | 1 | 1 |
| 34 | S150220027 | Screw | 1 | 1 | 1 | 1 |



jintex.in

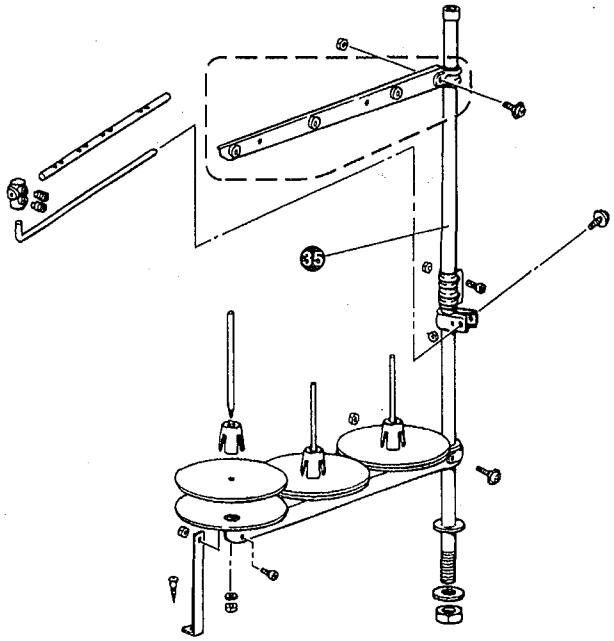


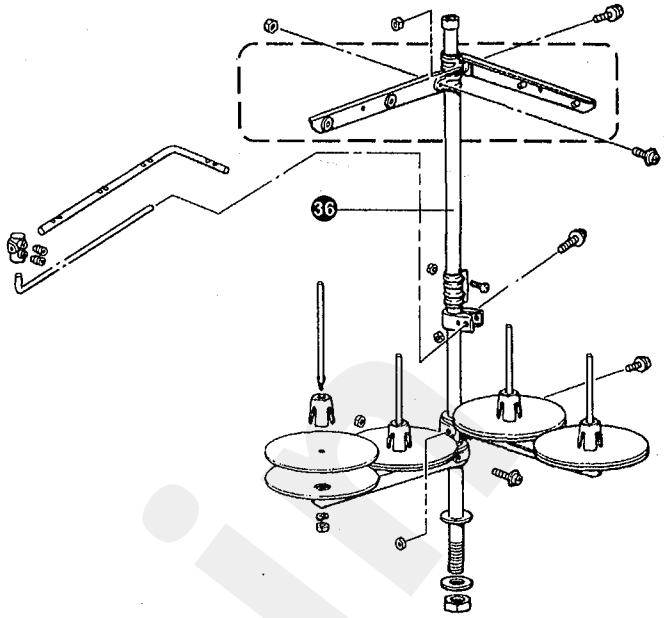


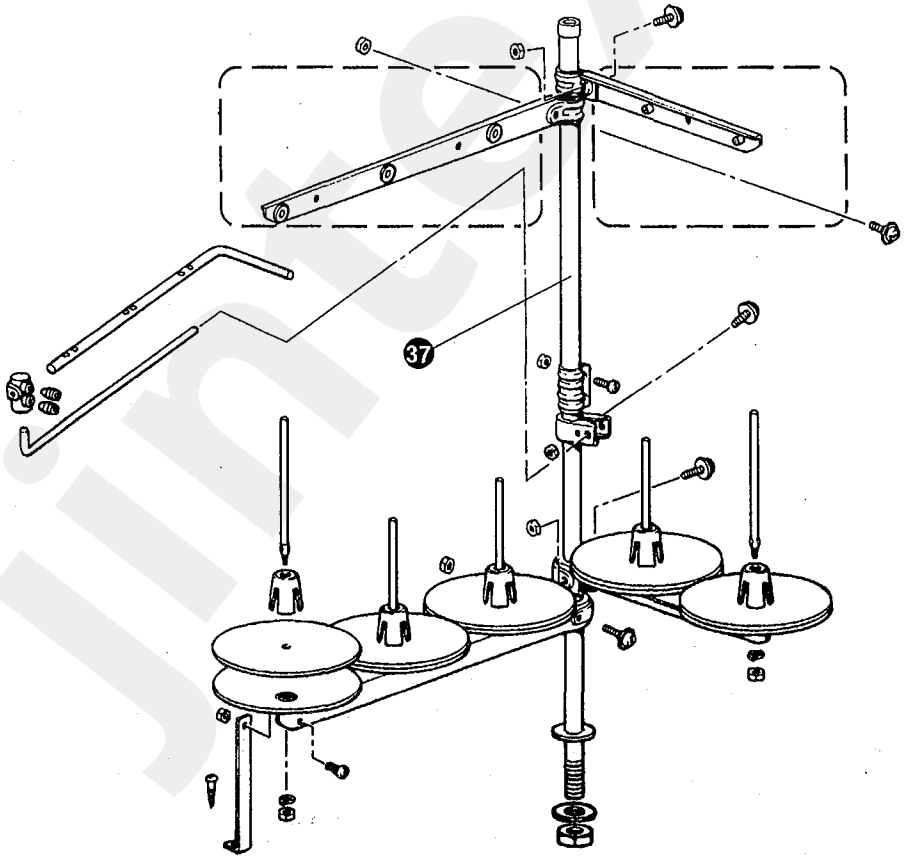




jintex.in

## 20. ACCESSORIES

| No. | Ret. No. | Description | Qt | | | |
|---|---|---|---|---|---|---|
| | | | 3 | 4/4H | 5 | 5H |
| 35 | GXJ -3B | Spool stand for three | 1 | | | |
| 36 | GXJ -4B | Spool stand for four | | 1 | | |
| 37 | GXJ -5B | Spool stand for five | | | 1 | 1 |



jintex.in

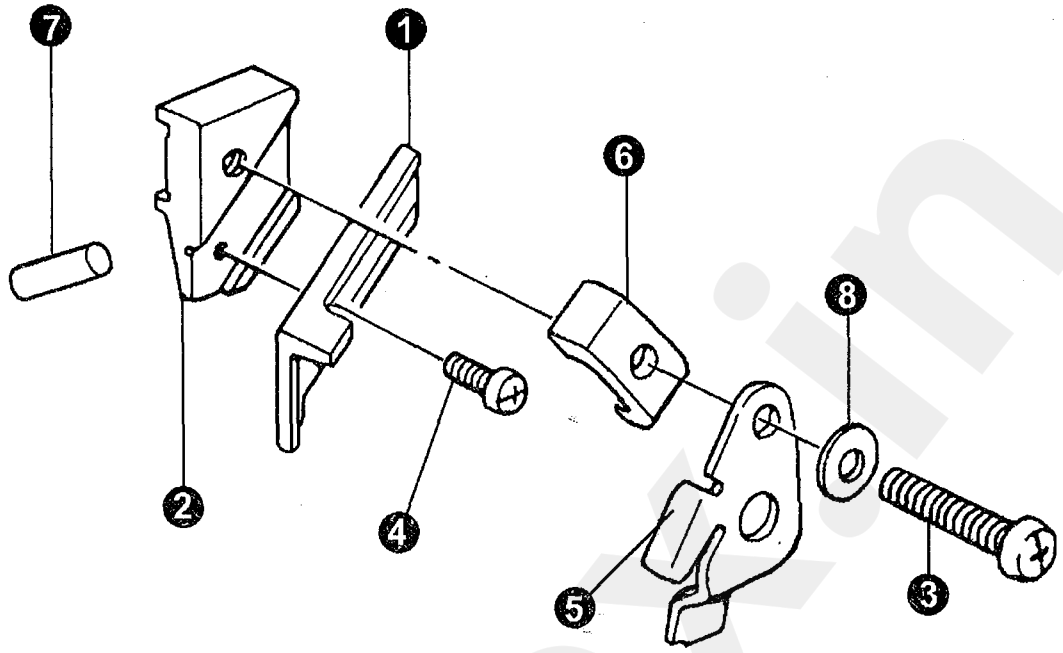


## Special – use parts for 2000 – 4H – A

| No. | Ret. No. | Description | Qt |
|---|---|---|---|
| 1 | 159600006 | Upper knife | 1 |
| 2 | 159600007 | Upper knife holder | 1 |
| 3 | 159600008 | Screw | 1 |
| 4 | S150217009 | Screw M3 × 4 | 1 |
| 5 | 155600014 | Guide board | 1 |
| 6 | 155600015 | Fixed board | 1 |
| 7 | 155600017 | Pin | 1 |
| 8 | S8A3103003 | Washer 4 | 1 |

Note: Spare parts of 2000 – 4H – A employ the same parts of 2000 – 4H



jintex.in

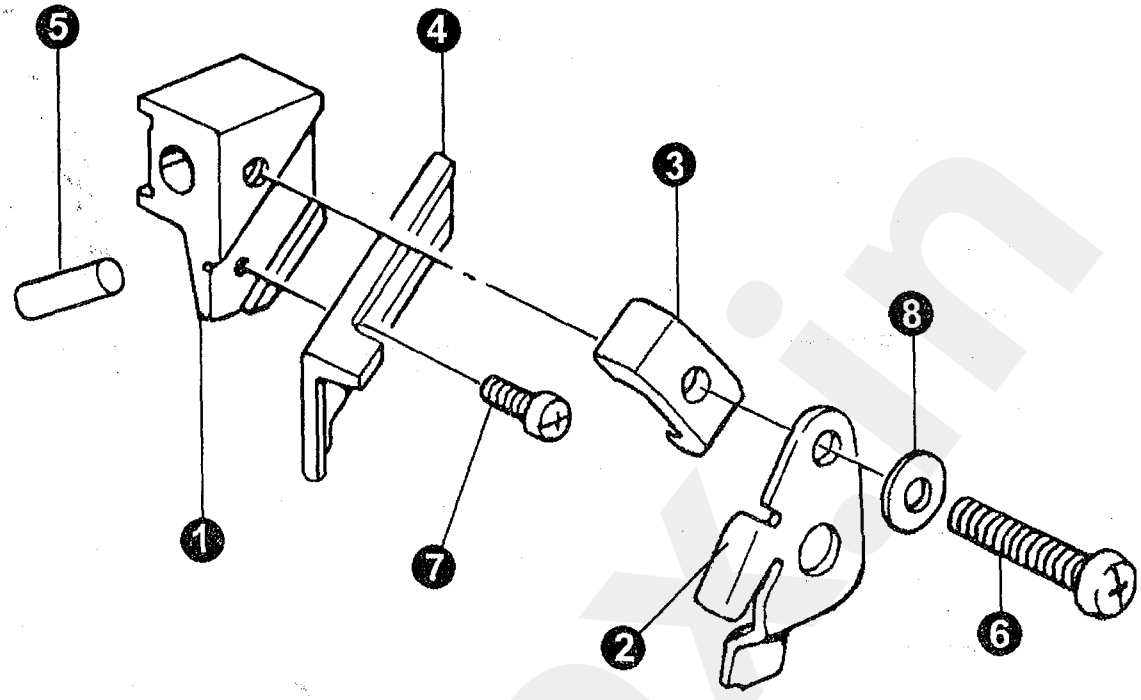


## Special – use parts for 2000 – 5H – A

| No. | Ret. No. | Description | Qt |
|---|---|---|---|
| 1 | 155600019 | Upper knife holder | 1 |
| 2 | 155600014 | Guide board | 1 |
| 3 | 155600015 | Fixed board | 1 |
| 4 | 155600016 | Upper knife | 1 |
| 5 | 155600017 | Pin | 1 |
| 6 | 155600018 | Screw | 1 |
| 7 | S150217009 | Screw M3 × 4 | 1 |
| 8 | S8A3103003 | Washer 4 | 1 |

Note: Spare partes of 2000 – 5H – A employ the same parts of 2000 – 5H



jintex.in

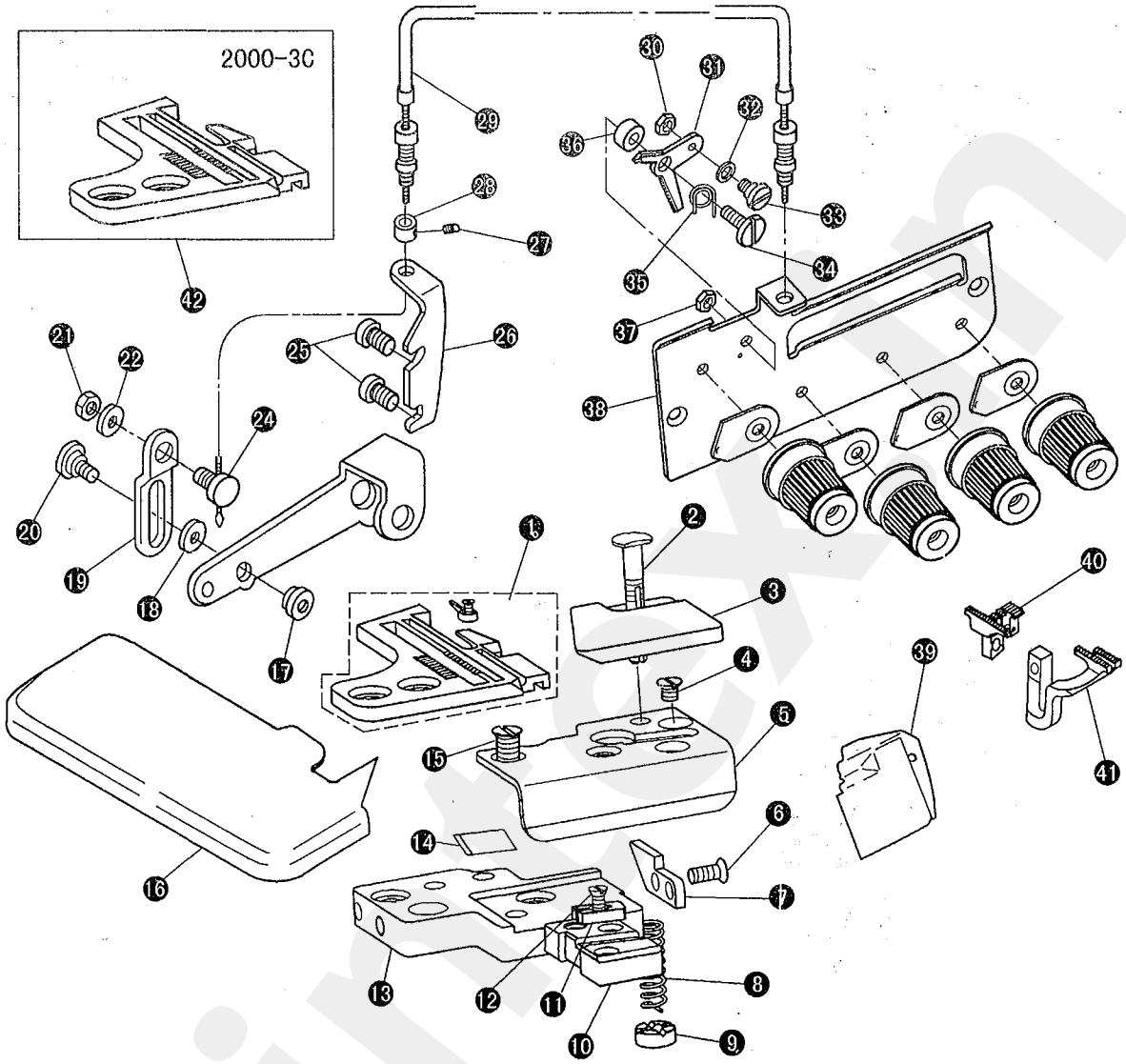




jintex.in

## Special –use parts for 2000–3C 2000–4C

| No | Ret. No. | Description | Qt | |
|---|---|---|---|---|
| | | | 3C | 4C |
| 1 | 159A41000 | Needle plate complete | | 1 |
| 2 | 109210009 | Screw | 1 | 1 |
| 3 | 159A40005 | Cutter protect plate | 1 | 1 |
| 4 | 028400059 | Screw | 2 | 2 |
| 5 | 159A40003 | Thread cut guide plate | 1 | 1 |
| 6 | 028400059 | Screw | 2 | 2 |
| 7 | 159A40001 | Needle plate guide plate | 1 | 1 |
| 8 | 109210010 | Spring | 1 | 1 |
| 9 | 109210011 | Nut | 1 | 1 |
| 10 | 109210005 | Knife support bracket | 2 | 2 |
| 11 | 109210006 | Block | 1 | 1 |
| 12 | 109210007 | Screw | 1 | 1 |
| 13 | 159A40002 | Needle plate block (Front) | 1 | 1 |
| 14 | 020101035 | Knife (width 9mm) | 1 | 1 |
| 15 | 159A40004 | Screw | 2 | 2 |
| 16 | 159A00002 | Sewing plate complete | 1 | 1 |
| 17 | 159A30003 | Screw | 1 | 1 |
| 18 | 159A23006 | Washer | 1 | 1 |
| 19 | 159A30001 | Plate | 1 | 1 |
| 20 | 159A30002 | Screw | 1 | 1 |
| 21 | S120501011 | Nut M6 | 1 | 1 |
| 22 | S150633001 | Washer 6 | 1 | 1 |
| 23 | 159A30004 | Screw | 1 | 1 |
| 24 | S150217013 | Screw M6 10 | 1 | 1 |
| 25 | 159A00003 | Thread support plate | 2 | 2 |
| 26 | 182610010 | Screw | 1 | 1 |
| 27 | 159A00004 | Block | 1 | 1 |
| 28 | 159A22000 | Soft thread complete | 1 | 1 |
| 29 | 028100035 | Nut | 1 | 1 |
| 30 | 159A23001 | Thread lease rack | 1 | 1 |
| 31 | 159A23006 | Washer | 1 | 1 |
| 32 | 159A23004 | Screw | 1 | 1 |
| 33 | 159A23002 | Screw | 1 | 1 |
| 34 | 159A23005 | Spring | 1 | 1 |
| 35 | 159A23003 | Block | 1 | 1 |
| 36 | 028100035 | Nut | 1 | 1 |
| 37 | 159A21001 | Thread guide plate | 1 | 1 |
| 38 | 159A10001 | Drawing | 1 | 1 |
| 39 | 160510000 | Mainfeed dog complete | 1 | 1 |
| 40 | 160500001 | Differential feed dog | 1 | 1 |
| 41 | 160A30000 | Needle plate complete | 1 | |

Note: Spare parts of 2000–3C/4C employ the same parts of 2000–3. 2000–4H



jintex.in

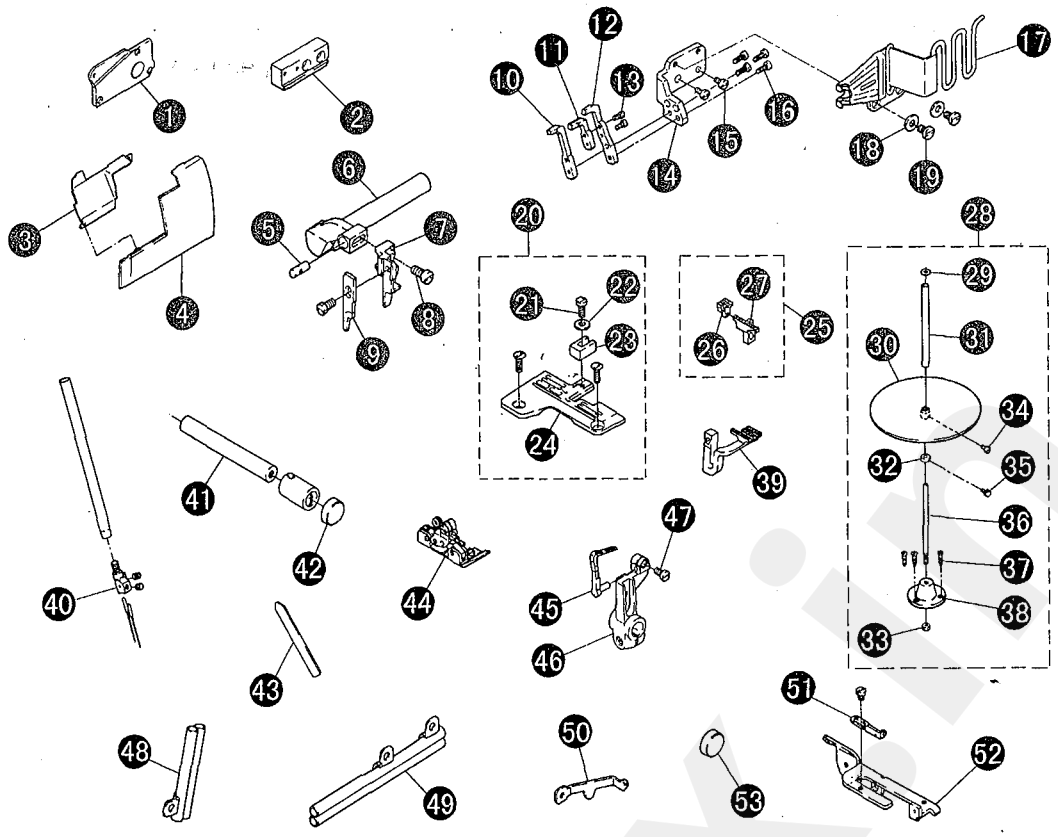

## Special – use parts for 2000 – 4G

| No. | Ret. No. | Descripion | Qt |
|---|---|---|---|
| 1 | 155E10000 | Cover | 1 |
| 2 | 155E00002 | Edge binder support bracket | 1 |
| 3 | 155E20002 | Front cover | 1 |
| 4 | 155E20001 | Front cover(L) | 1 |
| 5 | 155E00011 | Pin | 1 |
| 6 | 155E00009 | Upper knife bar | 1 |
| 7 | 155E00010 | Upper knife holder | 1 |
| 8 | 028500032 | Screw | 1 |
| 9 | 155E00012 | Upper knife | 1 |
| 10 | 155E00004 | Needle guard (rear) | 1 |
| 11 | 155E00005 | Chain stitch needle guard (rear) | 1 |
| 12 | 155E00003 | Needle guard (front) | 1 |
| 13 | 028400004 | Screw | 1 |
| 14 | 155E00006 | Plate | 1 |
| 15 | S150215001 | Screw | 1 |
| 16 | 028200061 | Screw | 1 |
| 17 | 155E60000 | Edge binder complete | 1 |
| 18 | 155E00007 | Washer | 1 |
| 19 | SFB0201020 | Screw | 1 |
| 20 | 155E70000 | Needle plate baracket | 1 |

Note: Spare parts of 2000 – 4G employ the same parts of 2000 – 5



jintex.in

## Special – use parts for 2000 – 4G

| No. | Ret. No. | Description | Qt |
|---|---|---|---|
| 21 | 028200061 | Screw | 1 |
| 22 | 028400004 | Washer | 1 |
| 23 | 155E70002 | Needle cloth guide | 1 |
| 24 | 155E70001 | Needle plate | 1 |
| 25 | 155E80000 | Main feed dog complete | 1 |
| 26 | 155E80002 | Auxible feed dog | 1 |
| 27 | 155E80001 | Main feed dog | 1 |
| 28 | 155Eg0000 | Belt plate dig complete | 1 |
| 29 | 155Eg0006 | Felt | 1 |
| 30 | 155Eg1000 | Belt plat small complete | 1 |
| 31 | 155Eg0003 | Rack | 1 |
| 32 | 155Eg0005 | Bush | 1 |
| 33 | S120501011 | Nut | 1 |
| 34 | S150237006 | Screw | 1 |
| 35 | 155Eg0004 | Screw | 1 |
| 36 | 155Eg0002 | Support rack | 1 |
| 37 | W050101002 | Screw | 1 |
| 38 | 155Eg0001 | Base mechanism | 1 |
| 39 | 155E00008 | Differential feed dog | 1 |
| 40 | 155E50001 | Needle holder | 1 |
| 41 | 155E00016 | Upper looper shaft | 1 |
| 42 | 022500005 | Oil seal | 2 |
| 43 | 155E00014 | Lower knife | 1 |
| 44 | 155Ea0000 | Presser foot complete | 1 |
| 45 | 155E90001 | Small looper | 1 |
| 46 | 155E90002 | Front loopler holder | 1 |
| 47 | 028100007 | Screw | 1 |
| 48 | 155Ee0000 | Double short thread pipe | 1 |
| 49 | 155Ed0000 | Double long thread pipe | 1 |
| 50 | 155E00015 | Thread guide plate | 1 |
| 51 | 155Eh0002 | Right thread guide | 1 |
| 52 | 155Eh0001 | Lower thread guide bracket | 1 |
| 53 | 028160001 | Upper looper oil seal | 1 |



jintex.in

## Special – use parts for 2000 – 4XH

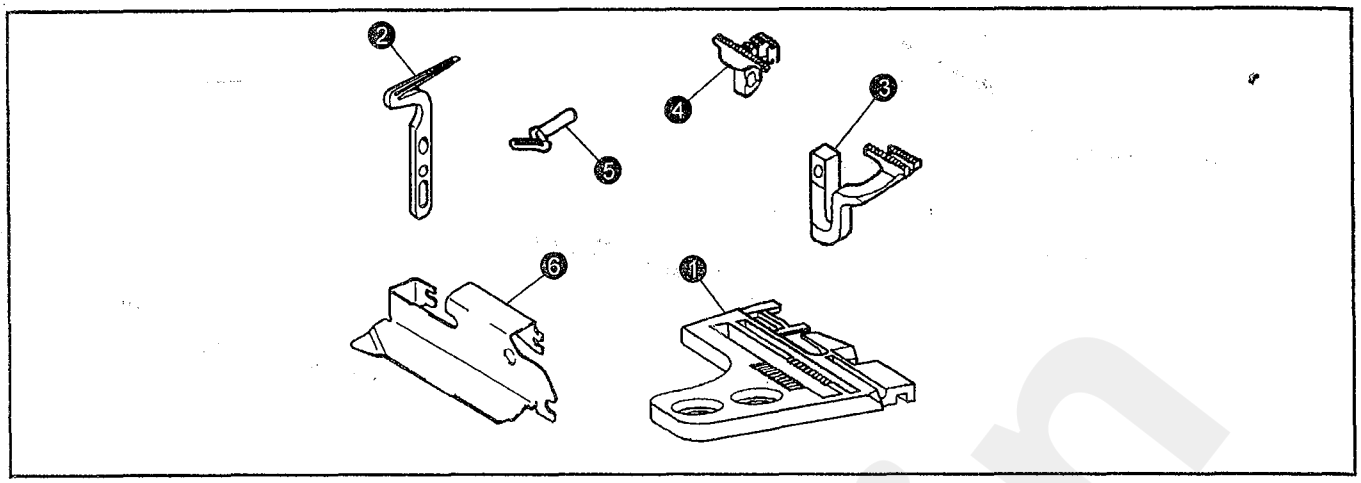


| No | Ret. No. | Description | Qt |
|---|---|---|---|
| 1 | 159350000 | Needle plate asm | 1 |
| 2 | 159400003 | Lower looper | 1 |
| 3 | 159500002 | Differential feed dog | 1 |
| 4 | 159520000 | Main feed dog asm | 1 |
| 5 | 159400004 | Upper looper | 1 |
| 6 | 159150000 | Cloth guide asm | 1 |

Note: Spare parts of 2000 – 4XH employ the same parts of 2000 – 4H – A

## Special – use parts for 2000 – 5L

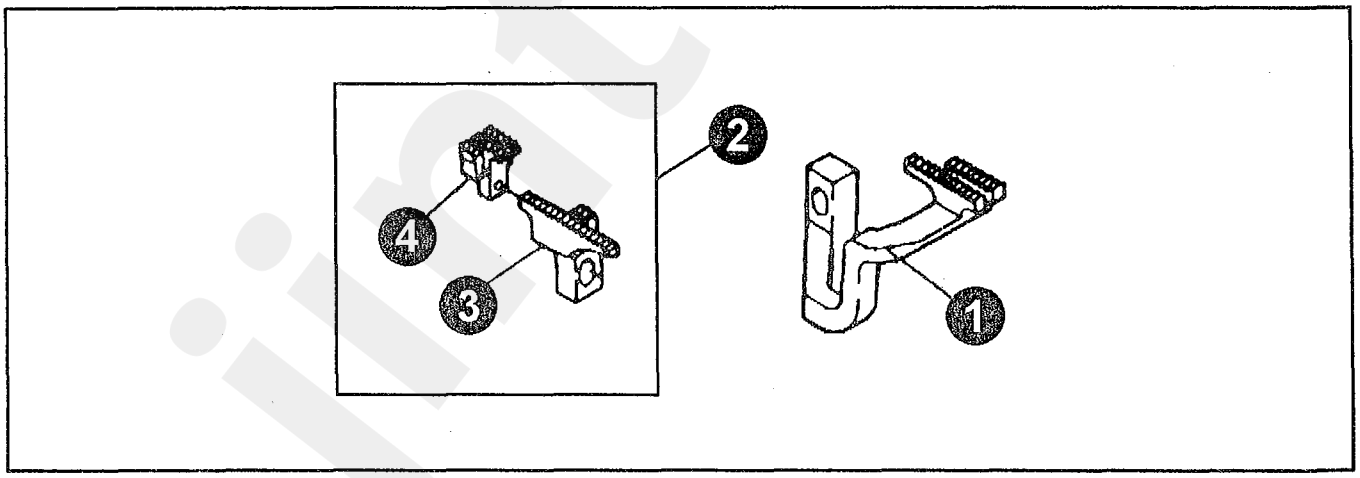


| No. | Ret. No. | Description | Qt |
|---|---|---|---|
| 1 | 155500052 | Differential feed dog | 1 |
| 2 | 155590000 | Main feed dog asm | 1 |
| 3 | 155590001 | Main feed dog | 1 |
| 4 | 155590002 | Auxible feed dog | 1 |

Note: Spare parts of 2000 – 5L employ the same parts of 2000 – 5(3×4)



jintex.in

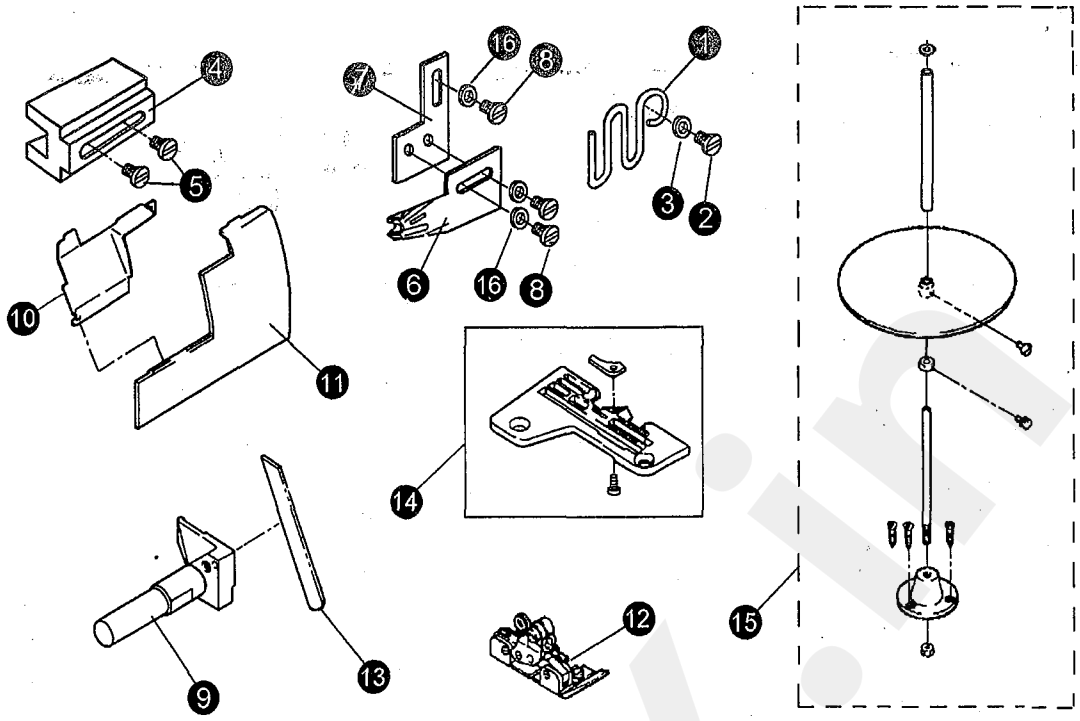


## Special –use parts for 2000 –5/BB

| No. | Ret. No. | Description | Qt |
|---|---|---|---|
| 1 | 155K00002 | Strap guide holder | 1 |
| 2 | S150215010 | Screw M4 ×12 | 1 |
| 3 | 155900017 | Washer | 1 |
| 4 | 155K00003 | Block | 1 |
| 5 | 159600008 | Screw | 2 |
| 6 | 155K00004 | Edge fomer | 1 |
| 7 | 155K00005 | Block | 1 |
| 8 | S150215001 | Screw | 3 |
| 9 | 155K00006 | Lower knife holder | 1 |
| 10 | 155K00007 | Front cover | 1 |
| 11 | 155E20001 | Front cover(L) | 1 |
| 12 | 155K20000 | Presser foot complete | 1 |
| 13 | 159600004 | Lower knife | 1 |
| 14 | 155K30000 | Needle plate complete | 1 |
| 15 | 155Eg0000 | Edge rotating plate complete | 1 |
| 16 | S150632001 | Washer | 3 |



jintex.in

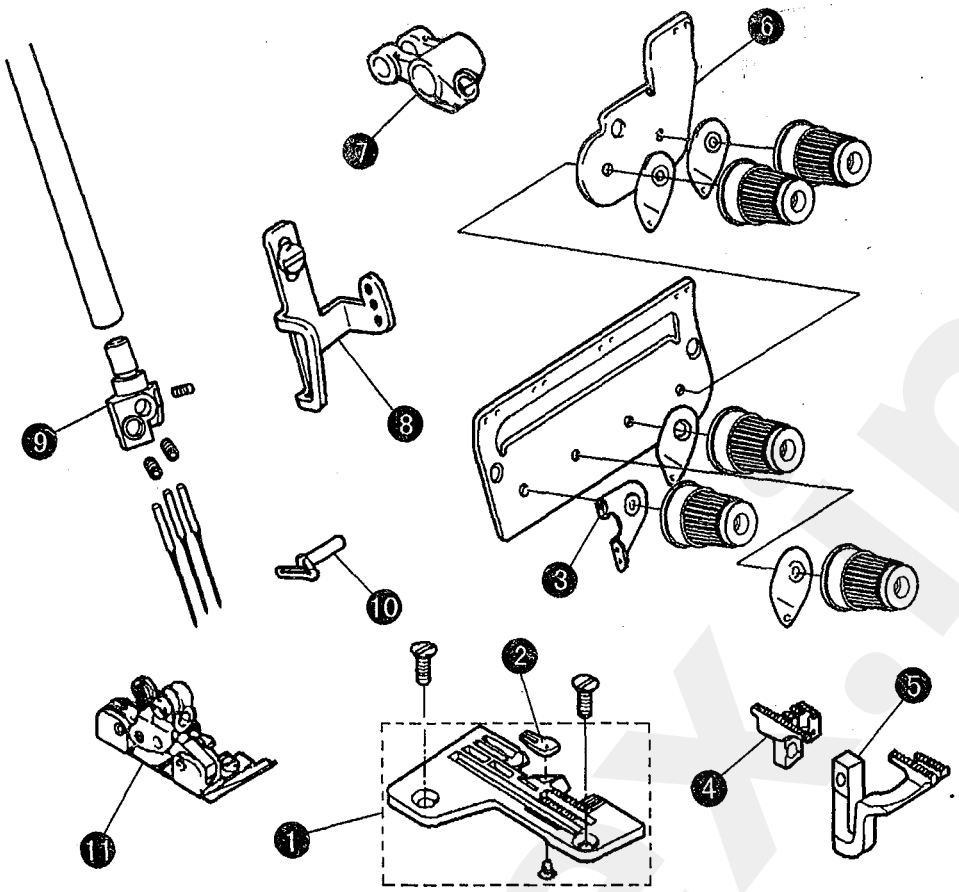


Special – use parts for 2000 – 6

| No. | Ret. No. | Description | Qt |
|---|---|---|---|
| 1 | 155G10000 | Needle plate complete | 1 |
| 2 | 155G10001 | Needle plate fitting | 1 |
| 3 | 155G40002 | Thread guide plate | 1 |
| 4 | 1555a0000 | Main feed dog complete | 1 |
| 5 | 155500051 | Differential feed dog | 1 |
| 6 | 155G40001 | Thread guide plate(S) | 1 |
| 7 | 155370001 | Upper shaft crank | 1 |
| 8 | 155G00003 | Needle thread guide plate | 1 |
| 9 | 155G20000 | Needle holder | 1 |
| 10 | 155G00002 | Upper looper | 1 |
| 11 | 155G30000 | Presser foot complete | 1 |

Note: Spare parts of 2000 – 6 employ the same parts of 2000 – 5



jintex.in

## Special –use parts for 2000 –3B

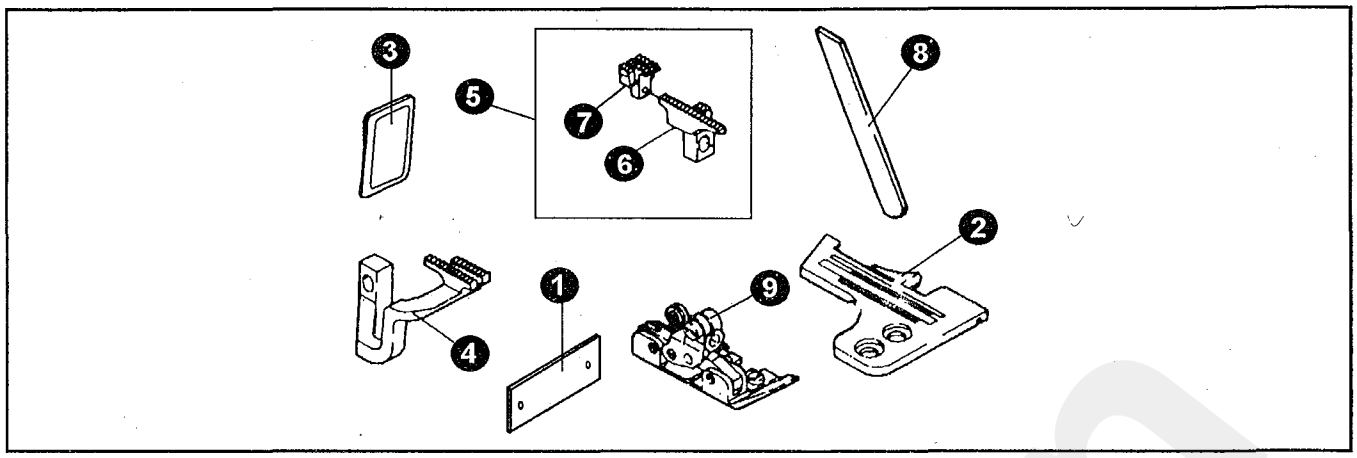


| No. | Ret. No. | Description | Qt |
|---|---|---|---|
| 1 | 160100003 | Model plate | 1 |
| 2 | 160300004 | Needle plate | 1 |
| 3 | 028280009 | Needle (DCX27 ) | 1 |
| 4 | 160500003 | Differential feed dog | 1 |
| 5 | 160520000 | Main feed dog complete | 1 |
| 6 | 160520001 | Main feed dog | 1 |
| 7 | 160520002 | Auxible feed dog | 1 |
| 8 | 160600001 | Lower knife | 1 |
| 9 | 160740000 | Presser foot complete | 1 |

Note: Spare parts of 2000 –3B employ the same parts of 2000 –3.

## Special –use parts for 2000 –3E

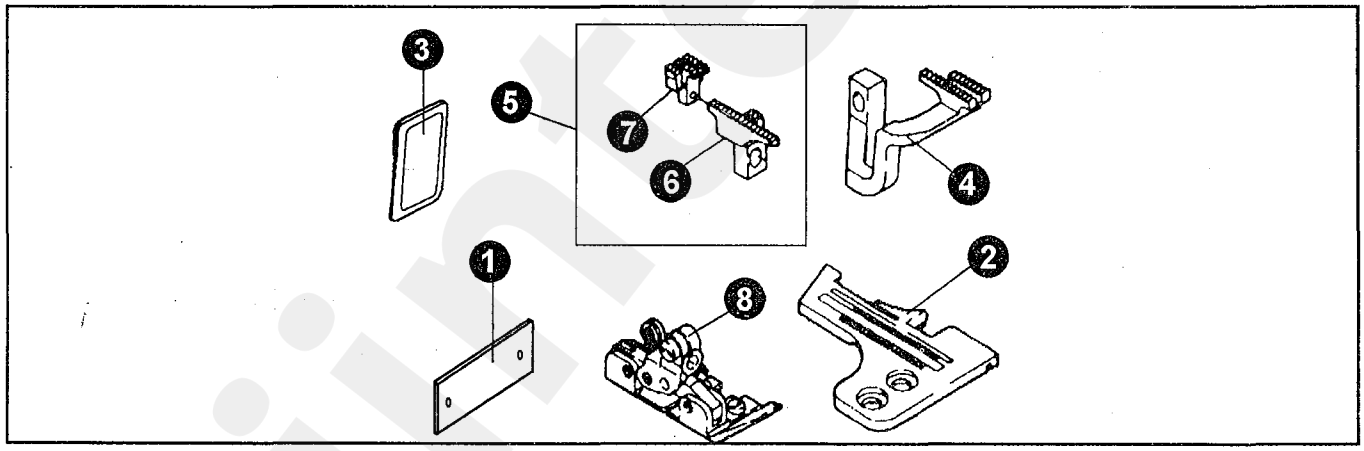


| No. | Ret. No. | Description | Qt |
|---|---|---|---|
| 1 | 160100004 | Model plate | 1 |
| 2 | 160300004 | Needle plate | 1 |
| 3 | 028280009 | Needle (DCX27 ) | 1 |
| 4 | 160500004 | Differential feed dog | 1 |
| 5 | 160530000 | Main feed dog complete | 1 |
| 6 | 160530001 | Main feed dog | 1 |
| 7 | 160530002 | Auxible feed dog | 1 |
| 8 | 160750000 | Presser foot complete | 1 |

Note: Spare parts of 2000 –3E employ the same parts of 2000 –3.



jintex.in

# 2000 SERIES GAUGE PARTS LIST

| MACHINE TYPE/SPEC | GAUGE NG | GAUGE SW | NEEDLE PLATE | NEEDLE PLATE FINGER | MAIN FEED DOG ASSM | MAIN FEED DOG | AUX. FEED DOG | DIFF. FEED DOG | PRESSER FOOT ASS. | UPPER LOOPER | LOWER LOOPER | CHAINSTITCH LOOPER |
|---|---|---|---|---|---|---|---|---|---|---|---|---|
| 2000 – 5L | 3 | 4 | 155390000 | 155390002 | 155590000 | 155590001 | 155590002 | 155500052 | 03971 | 155400015 | 155450002 | 155710002 |
| 2000 – 5 | 3 | 4 | 155390000 | 155390002 | 1555a0000 | 1555a0001 | 1555a0002 | 155500051 | 03971 | 155400015 | 155450002 | 155710002 |
| 2000 – 5(3 × 5) | 3 | 5 | 1553a0000 | 155340002 | 1555a0000 | 1555a0001 | 1555a0002 | 155500051 | 03971 | 155400015 | 155450002 | 155710002 |
| 2000 – 5(5 × 5) | 5 | 5 | 155340000 | 155340002 | 155520000 | 155520001 | 155520002 | 155500021 | 039720000 | 155400015 | 155450002 | 155710002 |
| 2000 – 5H | 5 | 6 | 155380000 | 155380002 | 155580000 | 155580001 | 155520002 | 155500050 | 07771 | 155400025 | 155450002 | 155730001 |
| 2000 – 5H – A | 5 | 6 | 155380000 | 155380002 | 155580000 | 155580001 | 155520002 | 155500050 | 07771 | 155400025 | 155450002 | 155730001 |

| MACHINE TYPE/SPEC | GAUGE NG | GAUGE SW | UPPER KNIFE | LOWER KNIFE | OVERLOCK NEEDLE GUARD FRONT | OVERLOCK NEEDLE GUARD REAR | OVERLOCK NEEDLE GUARD FRONT | OVERLOCK NEEDLE GUARD REAR | NEEDLE BAR ASSM | NEEDLE HOLDER | NEEDLE |
|---|---|---|---|---|---|---|---|---|---|---|---|
| 2000 – 5L | 3 | 4 | 155600008 | 155600011 | 155300025 | 155300024 | 155300031 | 155300032 | 155360000 | 155360002 | DC × 27 11# |
| 2000 – 5 | 3 | 4 | 155600008 | 155600011 | 155300025 | 155300024 | 155300031 | 155300032 | 155360000 | 155360002 | DC × 27 14# |
| 2000 – 5(3 × 5) | 3 | 5 | 155600008 | 155600011 | 155300025 | 155300024 | 155300031 | 155300032 | 155360000 | 155360002 | DC × 27 14# |
| 2000 – 5(5 × 5) | 5 | 5 | 155600008 | 155600011 | 155300025 | 155300024 | 155300027 | 155300026 | 155350000 | 155350002 | DC × 27 14# |
| 2000 – 5H | 5 | 6 | 155600008 | 155600011 | 155300025 | 155300024 | 155300027 | 155300026 | 155350000 | 155350002 | DC × 27 21# |
| 2000 – 5H – A | 5 | 6 | 155600008 | 155600011 | 155300025 | 155300024 | 155300027 | 155300026 | 155350000 | 155350002 | DC × 27 21# |



jintex.in

| MACHINE TYPE/SPEC | GAUGE NG | GAUGE SW | NEEDLE PLATE | NEEDLE PLATE FINGER | MAIN FEED DOG ASSM | MAIN FEED DOG | AUX. FEED DOG | DIFF, FEED DOG | PRESSER FOOT ASS. | UPPER LOOPER | LOWER LOOPER |
|---|---|---|---|---|---|---|---|---|---|---|---|
| 2000 -3(/2) | — | 4 | 160300001 | — | 160510000 | 160510001 | 160510002 | 160500001 | 160710000 | 160400001 | 155450002 |
| 2000 -3 | — | 4 | 160300003 | — | 159510000 | 159510001 | 159510002 | 159500001 | 160730000 | 160400001 | 155450002 |
| 2000 -3B | — | 1.5 | 160300004 | — | 160520000 | 160520001 | 160520002 | 160500003 | 160740000 | 160400001 | 155450002 |
| 2000 -3E | — | 1.5 | 160300004 | — | 160520000 | 160520001 | 160520002 | 160500003 | 160750000 | 160400001 | 155450002 |
| 2000 -4 | 2 | 4 | 159310000 | 159310002 | 159510000 | 159510001 | 159510002 | 159500001 | 159710000 | 159400001 | 155450002 |
| 2000 -4M | 2 | 4 | 159310000 | 159310002 | 159510000 | 159510001 | 159510002 | 159500001 | 159720000 | 159400001 | 155450002 |
| 2000 -4H | 2 | 4 | 159310000 | 159310002 | 159510000 | 159510001 | 159510002 | 159500001 | 159720000 | 159400001 | 155450002 |
| 2000 -4 H -A | 2 | 4 | 159310000 | 159310002 | 159510000 | 159510001 | 159510002 | 159500001 | 159720000 | 159400001 | 155450002 |



| MACHINE TYPE/SPEC | GAUGE NG | GAUGE SW | UPPER KNIFE | LOWER KNIFE | NEEDLE GUARD FRONT | NEEDLE GUARD REAR | NEEDLE BAR ASSM | NEEDLE HOLDER | NEEDLE |
|---|---|---|---|---|---|---|---|---|---|
| 2000 -3(/2) | — | 4 | 155600008 | 159600004 | 159300001 | 155300024 | 160320000 | 160320001 | DC ×27 11# |
| 2000 -3 | — | 4 | 155600008 | 159600004 | 159300001 | 155300024 | 160320000 | 160320001 | DC ×27 11# |
| 2000 -3B | — | 1.5 | 155600008 | 159600004 | 159300001 | 155300024 | 160320000 | 160320001 | DC ×27 9# |
| 2000 -3E | — | 1.5 | 155600008 | 159600004 | 159300001 | 155300024 | 160320000 | 160320001 | DC ×27 9# |
| 2000 -4 | 2 | 4 | 155600008 | 159600004 | 159300001 | 155300024 | 159320000 | 159320001 | DC ×27 11# |
| 2000 -4M | 2 | 4 | 155600008 | 159600004 | 159300001 | 155300024 | 159320000 | 159320001 | DC ×27 14# |
| 2000 -4H | 2 | 4 | 155600008 | 15960004 | 159300001 | 155300024 | 159320000 | 159320001 | DC ×27 14# |
| 2000 -4 H -A | 2 | 4 | 155600008 | 159600004 | 159300001 | 155300024 | 159320000 | 159320001 | DC ×27 14# |

jintex.in

jintex.in

jintex.in

# CM793
# CM794
# CM795

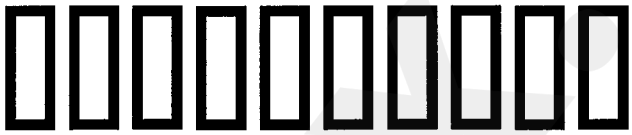

Since 1898
CONSEW®
CONSOLIDATED SEWING MACHINE CORP.
INDUSTRIAL SEWING & CUTTING EQUIPMENT
400 VETERANS BLVD, CARLSTADT, NJ 07072
212-741-7788

jintex.in