JINTEX

Sewing Machine Spare Parts

Yamato CZ6025

Sewing Machine Part Book

35 pages

jintex.in | enquiry@jintex.in | +91 96321 55211

33 Park Road, Akkipet Circle, Bangalore

yamato®

Parts Number List

HIGHT SPEED OVERLOCK STITCH MACHINE

CZ6000 CLASS

MODEL

CZ6025

本零件号码列表以 CZ6025-Y6 为基本型式插图。

如果需要订货，请告知 PARTS NO.（零件号码）（例：6200066）

☆隔距标注在图上 REF. NO. 后（例：30-1(Y5) 表示 REF. NO. 30-1 对应针距 Y（3. 2mm）缝边幅 5）

本零件号码列表之记载事项，如有改良随时更改。以实际产品为准，恕不另行通知。

P/N 6810001(P)

jintex.in

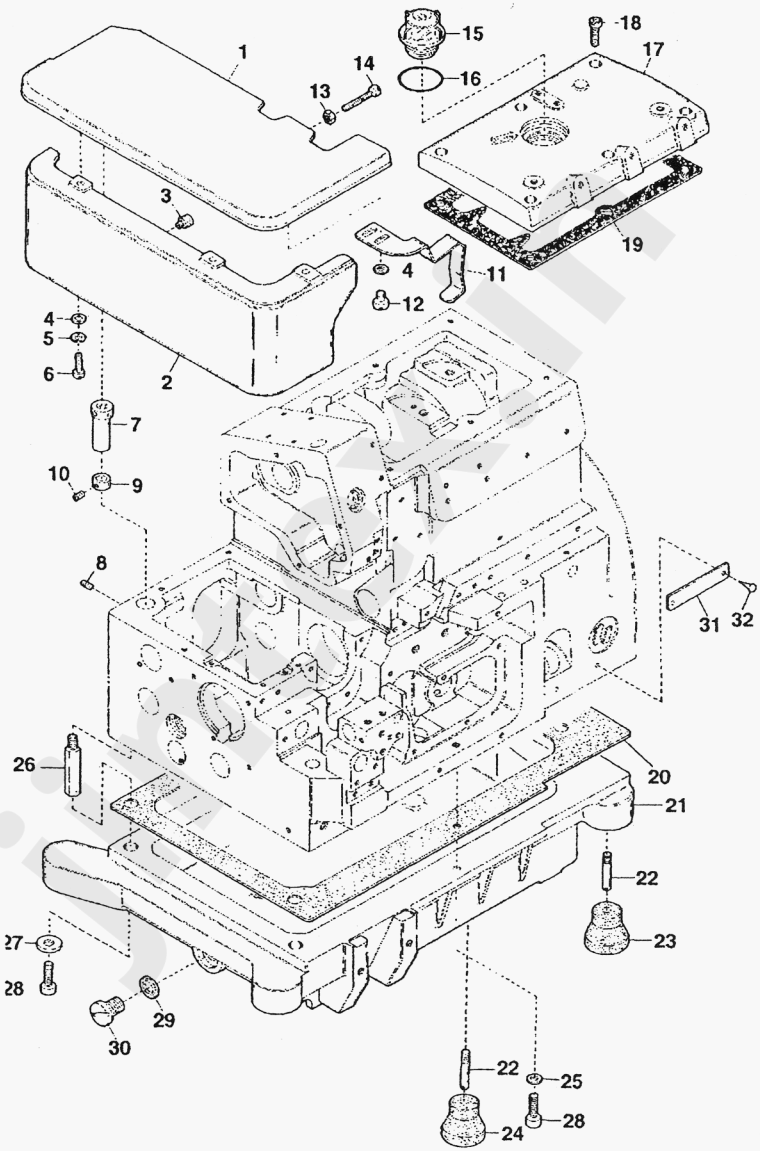
1
2
3
4
5
6
7
8
9
10
11
12
13
14
15
16
17
18
19
20
21
22
23
24
25
26
27
28
29
30
31
32

Ref. No.	Parts No.	Amt. Req.
1	6200066	1
2	6200302	1
3	6200072	1
4	001123	5
5	000644	3
6	110045	3
7	6200070	1
8	160001	1
9	6200071	1
10	003637	1
11	6200217	1
12	110012	2
13	100001	1
14	110031	1
15	6200015	1

Ref. No.	Parts No.	Amt. Req.
16	6200016	1
17	6200078	1
18	110016	6
19	6200228	1
20	6200172	1
21	6200309	1
22	006816	4
23	6200029	3
24	6200033	1
25	300043	2
26	6200182	4
27	300004	4
28	120017	6
29	6100029	1
30	005075	1

Ref. No.	Parts No.	Amt. Req.
31	6109401	1
32	000726	2

jintex.in

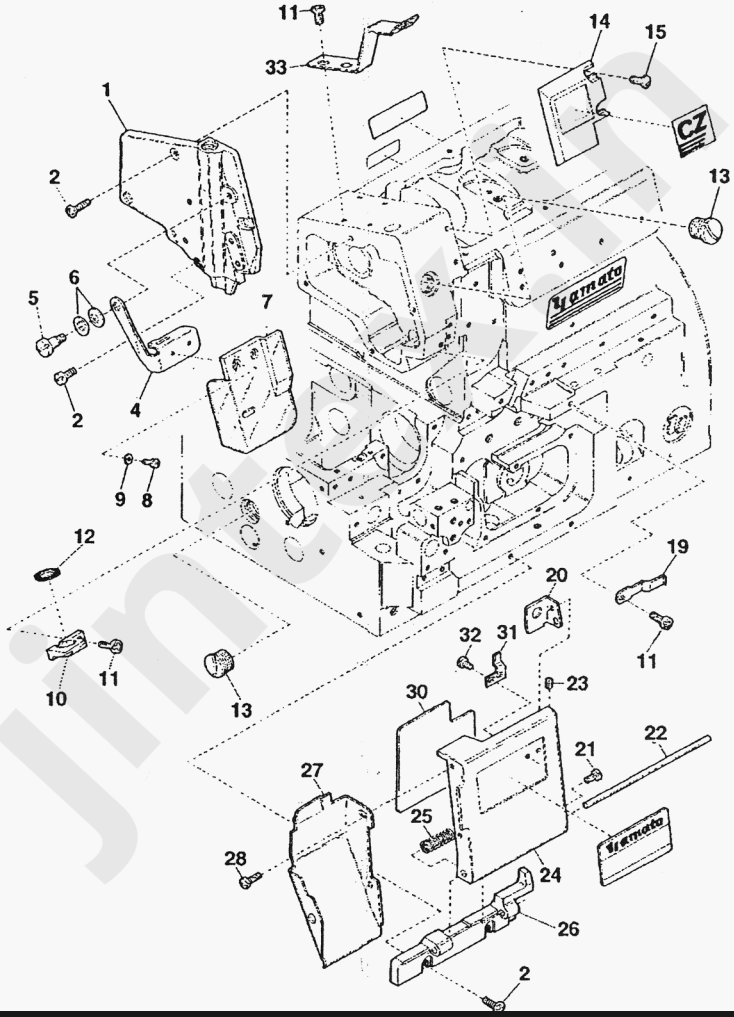
11
33
14
15
1
CZ
2
13
6
5
7
Yamato
4
2
9
8
12
19
20
32
31
11
10
11
13
23
30
22
21
27
25
28
24
26
2

jintex.in

Ref. No.	Parts No.	Amt. Req.
1	6200218	1
2	110013	6
3		
4	6200220	1
5	170032	1
6	000010	2
7	6200285	1
8	110076	2
9	000444	2
10	6200225	1
11	110012	4
12	6200226	1
13	190015	2
14	6200227	1
15	110106	2

Ref. No.	Parts No.	Amt. Req.
16		
17		
18		
19	6200159	1
20	6200027	1
21	001203	1
22	6200017	1
23	003637	2
24	6200073	1
25	6200024	1
26	6200310	1
27	6200156	1
28	110003	2
29		
30	390660	1

Ref. No.	Parts No.	Amt. Req.
31	6200170	1
32	110054	2
33	6200375	1
34		

jintex.in

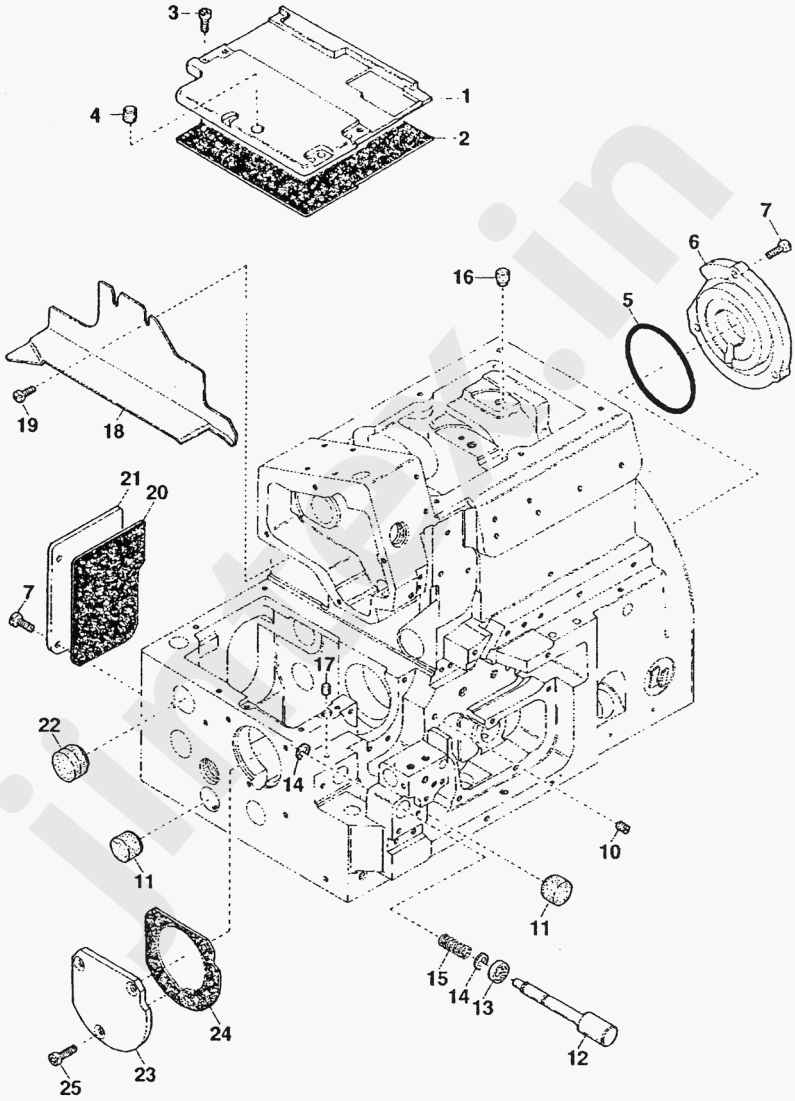

jintex.in

Ref. No.	Parts No.	Amt Req.
1	·6200075	1
2	6200192	1
3	110048	5
4	6200077	1
5	6200212	1
6	6200211	1
7	110013	7
8		
9		
10	150004	1
11	6200209	2
12	6200224	1
13	6200171	1
14	6100333	2
15	6200036	1

Ref. No.	Parts No.	Amt Req.
16	330008	1
17	330000	1
18	6200219	1
19	110064	2
20	6200191	1
21	6200076	1
22	6200035	1
23	6200180	1
24	6200181	1
25	130003	3

Ref. No.	Parts No.	Amt Req.

jintex.in

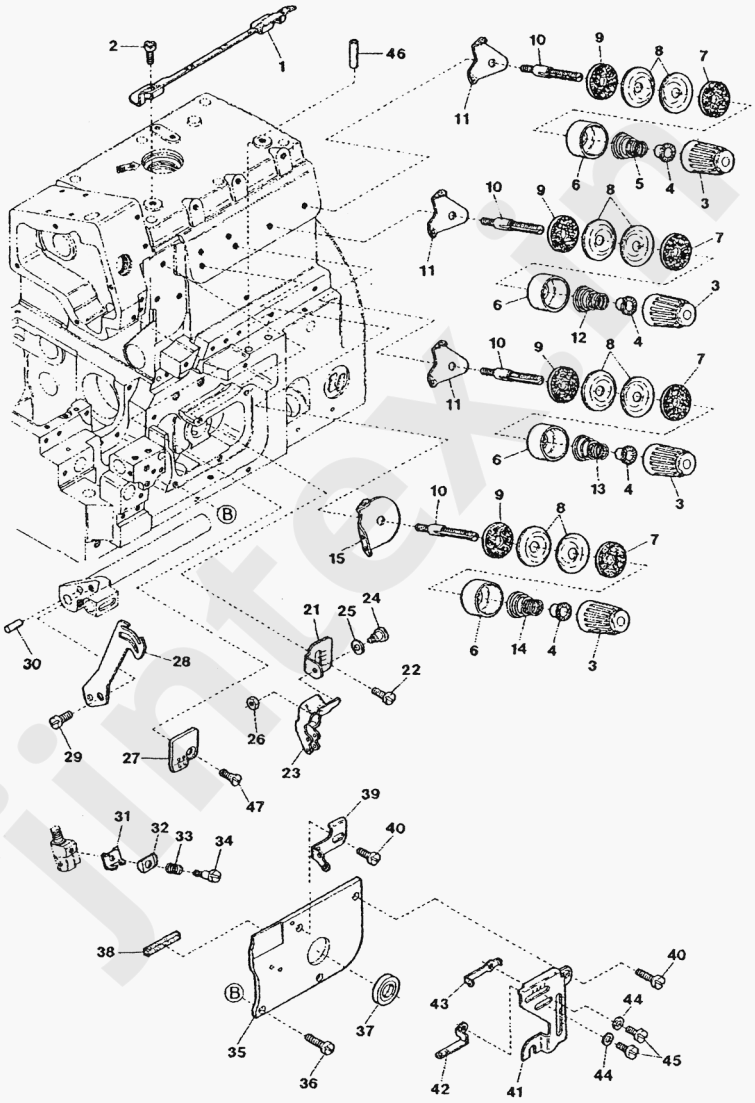
1
2
46
10
9
8
7
11
6
5
4
3
12
13
15
14
B
21
25
24
22
30
28
29
27
26
23
47
39
40
31
32
33
34
38
35
36
37
43
42
41
44
45

jintex.in

Ref. No.	Parts No.	Amt. Req.
1	6200079	1
2	110013	2
3	6100056	4
4	6100057	4
5	6200026	1
6	6200019	4
7	000178	4
8	6100062	8
9	000177	4
10	190087	4
11	6200031	3
12	6100059	1
13	6200032	1
14	6200025	1
15	6200277	1
16		
17		
18		
19		
20		

Ref. No.	Parts No.	Amt. Req.
21	6200284	1
22	110001	3
23	6200276	1
24	006035	1
25	000644	1
26	000322	1
27	6200275	1
28	6200272	1
29	110073	1
30	000653	1
31	6200273	1
32	6200274	1
33	6200287	1
34	170049	1
35	6200229	1
36	110009	1
37	6100111	1
38	6200164	1
39	6200280	1
40	110035	2

Ref. No.	Parts No.	Amt. Req.
41	6200283	1
42	6200281	1
43	6200282	1
44	000014	2
45	110026	2
46	6200023	2

jintex.in

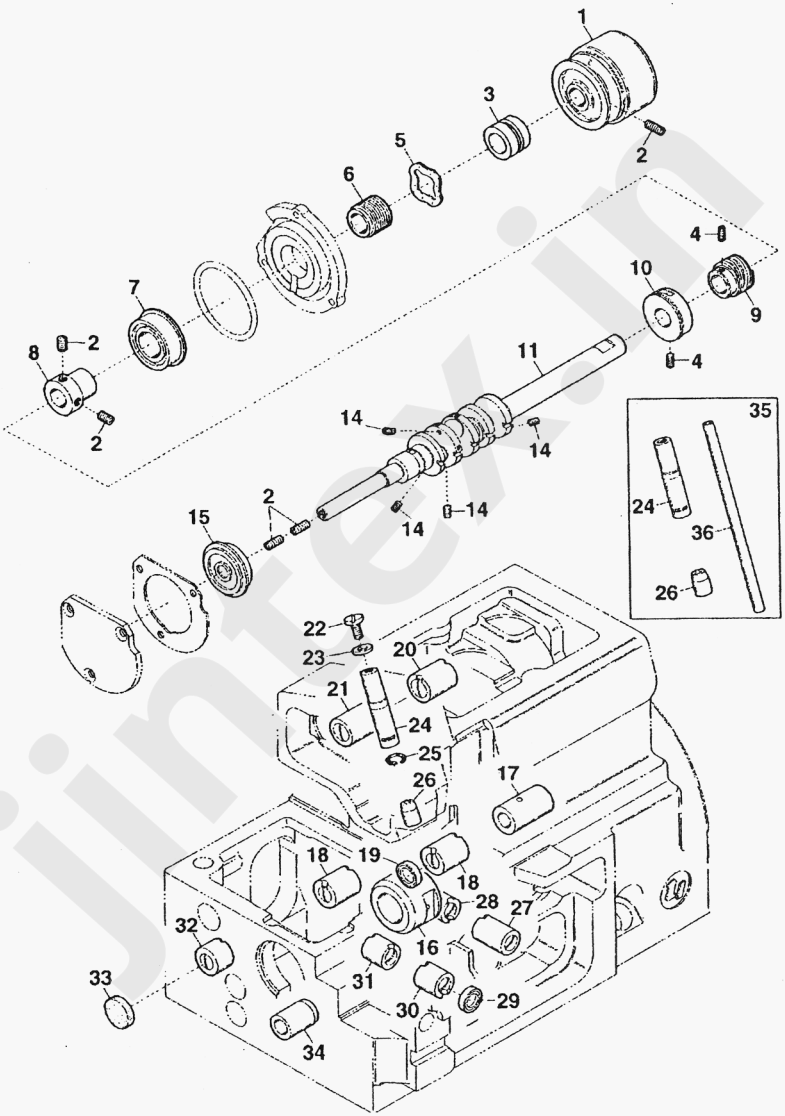
1
2
3
4
5
6
7
8
9
10
11
14
15
16
17
18
19
20
21
22
23
24
25
26
27
28
29
30
31
32
33
34
35
36

jintex.in

Ref. No.	Parts No.	Amt. Req.
1	6200305	1
2	160007	6
3	6200162	1
4		
5	6200214	1
6	6200213	1
7	6100125	1
8	6100127	1
9	6200268	1
10	6200373	1
11	6200270	1
12		
13		
14	160027	5
15	6200179	1

Ref. No.	Parts No.	Amt. Req.
16	6200234	1
17	6200083	1
18	6200238	2
19	6200084	1
20	6200244	1
21	6200243	1
22	003636	1
23	000526	1
24	6200235	1
25	310109	1
26	6200236	1
27	6200241	1
28	6200242	1
29	6200132	1
30	6200239	1

Ref. No.	Parts No.	Amt. Req.
31	6200240	1
32	6200237	1
33	6200259	1
34	6200081	1
35	6200245	1
36	6200163	1

jintex.in

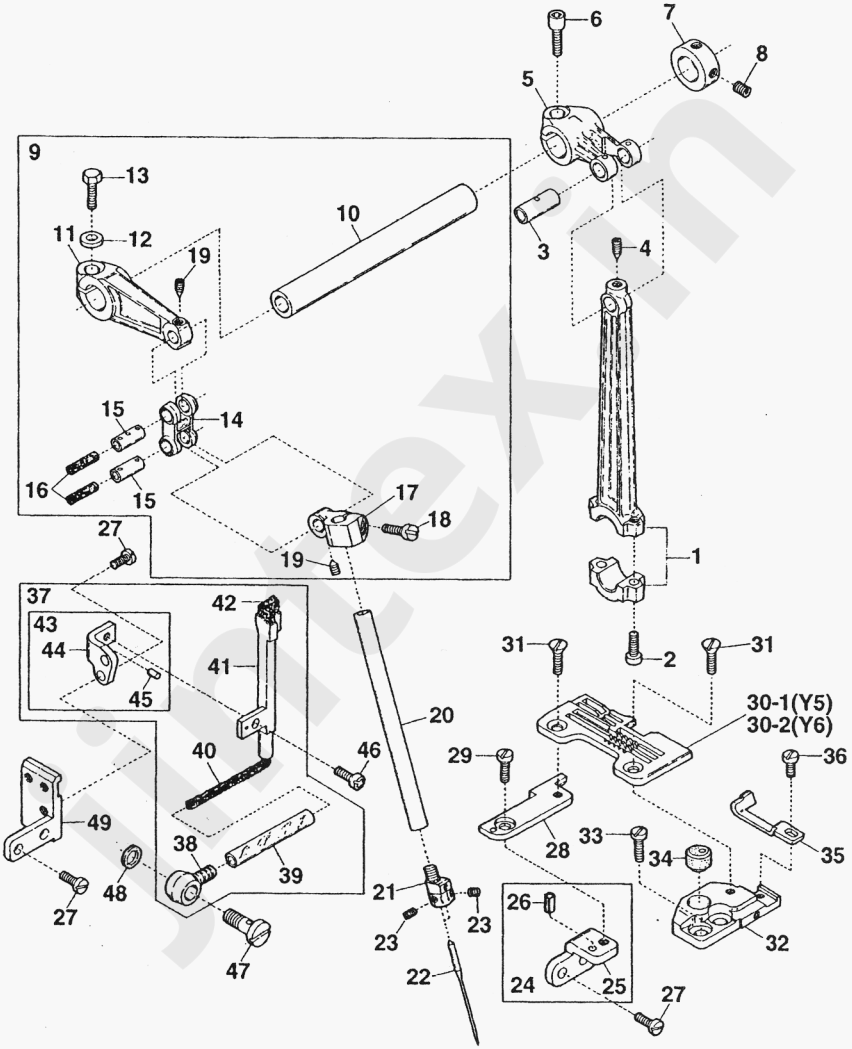
6
7
8
5
9
13
10
11
12
19
3
4
15
14
16
15
17
18
27
19
1
37
42
43
44
41
45
31
2
31
20
30-1(Y5)
30-2(Y6)
40
46
29
36
49
28
33
34
35
38
39
48
21
23
26
27
23
32
47
22
24
25
27

jintex.in

Ref. No.	Parts No.	Amt. Req.
1	6200271	1
2	120049	2
3	6200088	1
4	160002	1
5	6200187	1
6	120006	1
7	6200086	1
8	160003	2
9	6200307	1
10	6200306	1
11	6200085	1
12	300008	1
13	140003	1
14	6200087	1
15	6200101	2
16	310089	2
17	6200246	1
18	110006	1
19	160016	2
20	6200163	1

Ref. No.	Parts No.	Amt. Req.
21	6209100	1
22	-------	2
23	003637	2
24	6200249	1
25	6200250	1
26	000035	1
27	110009	6
28	6200153	1
29	110001	1
30 -1	6208000	1
30 -2	6208002	1
31	005345	2
32	6200089	1
33	110011	2
34	6100020	1
35	6209200	1
36	110002	1
37	6200232	1
38	6100310	1
39	6200090	1

Ref. No.	Parts No.	Amt. Req.
41	6200155	1
42	310001	1
43	6200157	1
44	6200158	1
45	000393	1
46	110013	1
47	320008	1
48	000567	1
49	6200296	1

jintex.in

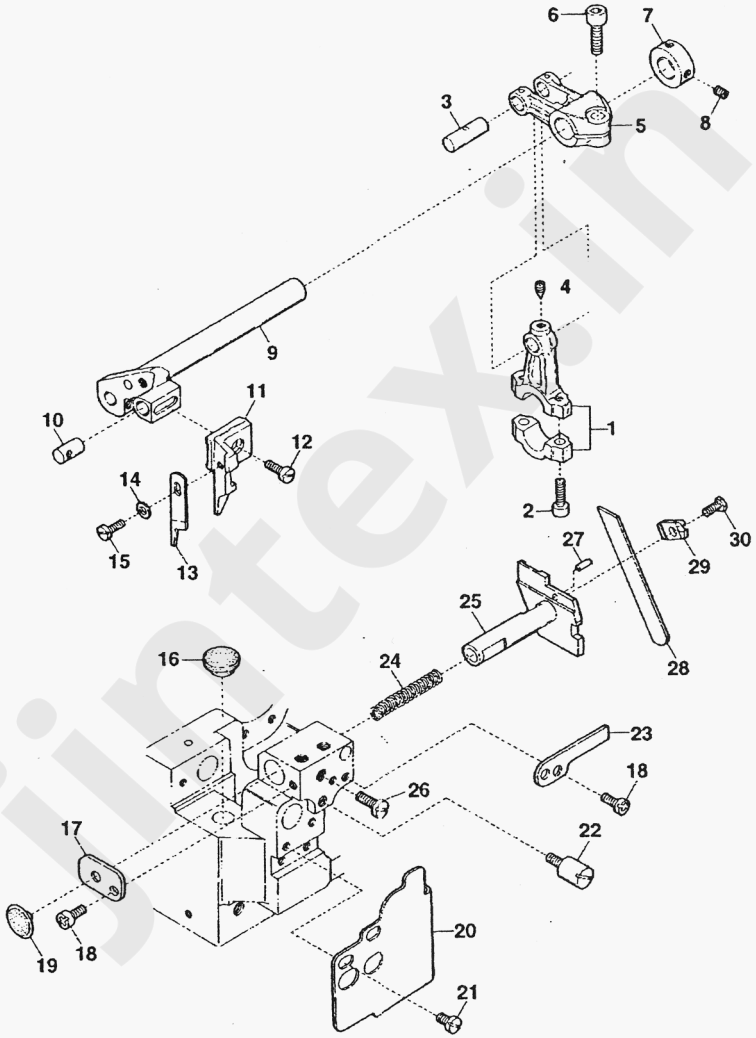
6
7
3
5
8
4
9
11
10
12
1
14
2
15
13
27
30
29
25
28
16
24
23
18
26
17
22
20
19
18
21

jintex.in

Ref. No.	Parts No.	Amt. Req.
1	6200091	1
2	120049	2
3	6100367	1
4	160002	1
5	6200093	1
6	120006	1
7	6200092	1
8	160003	2
9	6200251	1
10	6200095	1
11	6200094	1
12	110035	1
13	6200022	1
14	000532	1
15	110004	1

Ref. No.	Parts No.	Amt. Req.
16	6100017	1
17	6200222	1
18	110012	3
19	6200100	1
20	6200221	1
21	110001	2
22	6200068	1
23	6200223	1
24	6200030	1
25	6200096	1
26	110046	1
27	000688	1
28	6200097	1
29	6200098	1
30	140014	1

Ref. No.	Parts No.	Amt. Req.

jintex.in

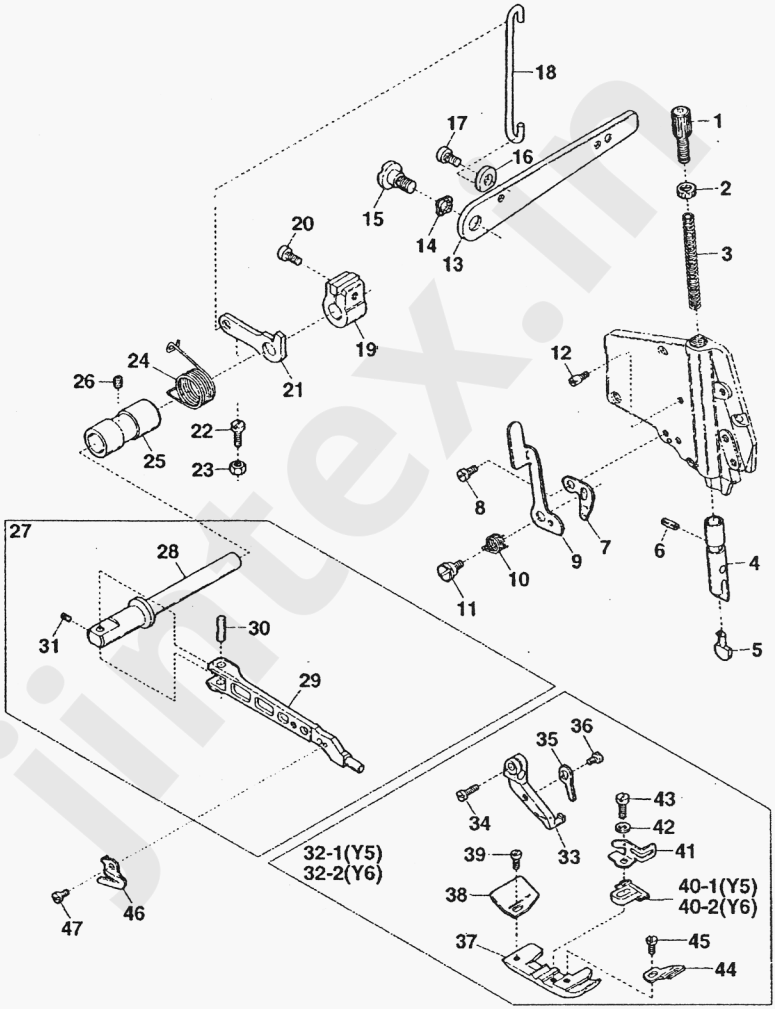
18
17
16
1
2
15
14
13
3
20
19
21
24
26
25
22
23
12
8
9
7
6
10
11
4
5
27
28
31
30
29
35
36
34
33
43
42
41
39
32-1(Y5)
32-2(Y6)
38
40-1(Y5)
40-2(Y6)
37
45
44
46
47

jintex.in

Ref. No.	Parts No.	Amt. Req.
1	190081	1
2	100073	1
3	215709	1
4	6200292	1
5	6200160	1
6	000482	1
7	6200293	1
8	110012	1
9	6200294	1
10	6200295	1
11	170045	1
12	180001	1
13	6200297	1
14	000487	1
15	170047	1
16	6200291	1
17	120010	1
18	6200105	1
19	6200154	1
20	120017	1

Ref. No.	Parts No.	Amt. Req.
21	6200104	1
22	110065	1
23	100001	1
24	6200288	1
25	6200082	1
26	160007	1
27	6200289	1
28	6200103	1
29	6200290	1
30	6200106	1
31	160001	1
32 -1	6207020	1
32 -2	6207021	1
33	6207001	1
34	110004	1
35	6207003	1
36	110050	1
37	6207002	1
38	6200034	1
39	004237	1

Ref. No.	Parts No.	Amt. Req.
40 -2	6207022	1
41	6207643	1
42	000444	1
43	005036	1
44	6207018	1
45	001230	1
46	6200020	1
47	004097	1

jintex.in

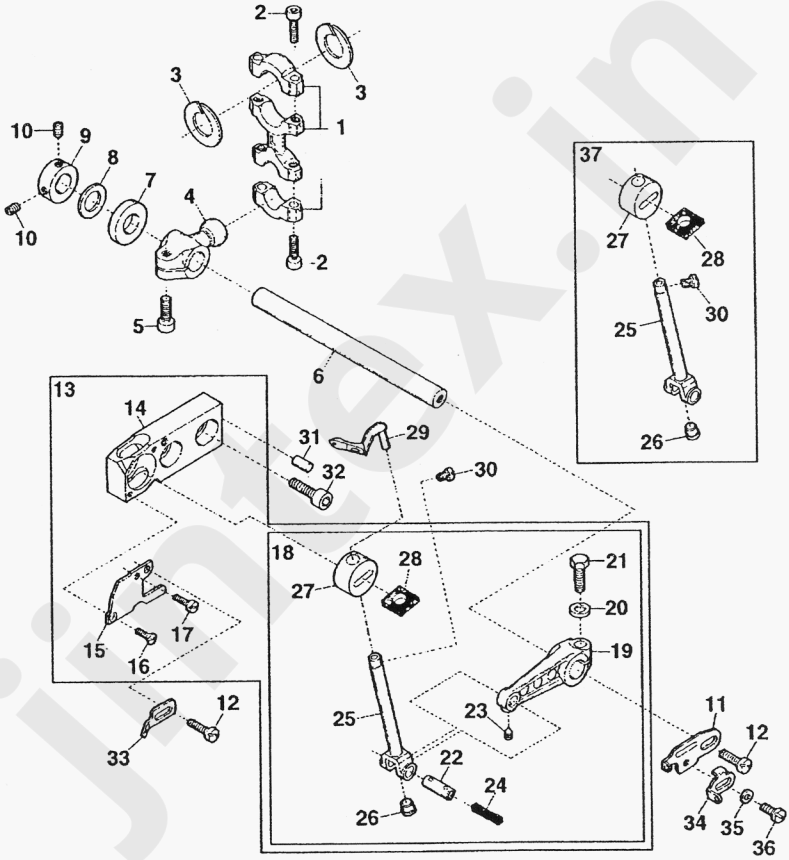
2
3
3
1
10
9
8
7
4
10
2
5
6
37
27
28
30
25
26
13
14
31
29
32
30
18
28
27
21
20
19
15
17
16
25
23
11
12
12
33
22
24
26
34
35
36

jintex.in

Ref. No.	Parts No.	Amt. Req.
1	6200188	1
2	120049	4
3	6200080	2
4	6200261	1
5	120006	1
6	6200260	1
7	6200262	1
8	6200263	1
9	6200092	1
10	160001	2
11	6200286	1
12	110009	2
13	6200117	1
14	6200114	1
15	6200110	1

Ref. No.	Parts No.	Amt. Req.
16	130001	1
17	110071	1
18	6200116	1
19	6200111	1
20	300008	1
21	140004	1
22	6200113	1
23	160002	1
24	310089	1
25	6200112	1
26	000629	1
27	6200115	1
28	310065	1
29	6209300	1
30	210009	1

Ref. No.	Parts No.	Amt. Req.
31	000779	1
32	120013	2
33	6200169	1
34	6200278	1
35	000014	1
36	110002	1
37	6200120	1

jintex.in

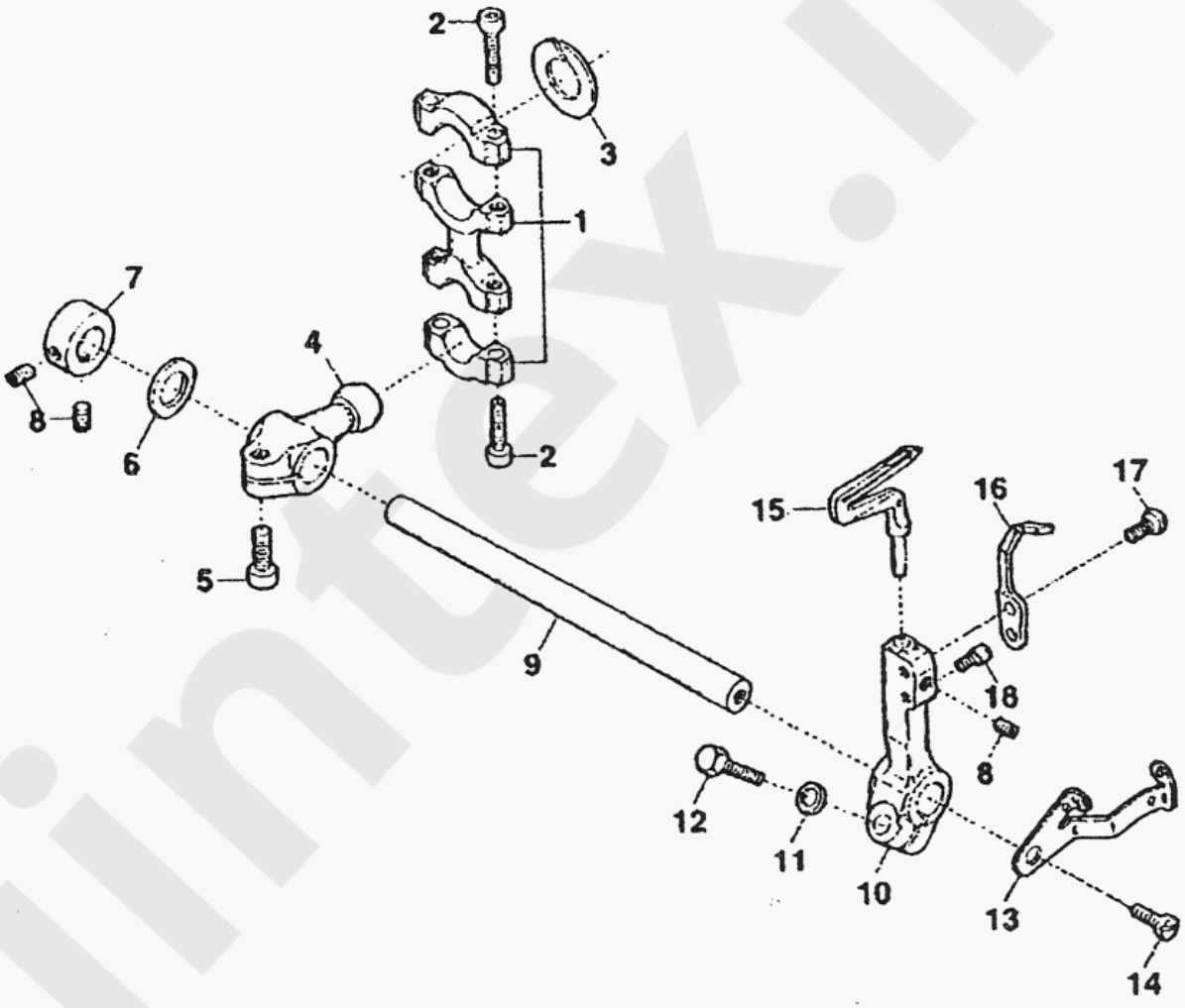

jintex.in

Ref. No.	Parts No.	Amt. Req.
1	6200108	1
2	120049	4
3	6200080	1
4	6200377	1
5	120006	1
6	6200189	1
7	6200092	1
8	160003	3
9	6200109	1
10	6200107	1
11	300008	1
12	140002	1
13	6200279	1
14	110009	1
15	6209301	1
16	6209201	1
17	110036	1
18	180014	1

Ref. No.	Parts No.	Amt. Req.

Ref. No.	Parts No.	Amt. Req.

jintex.in

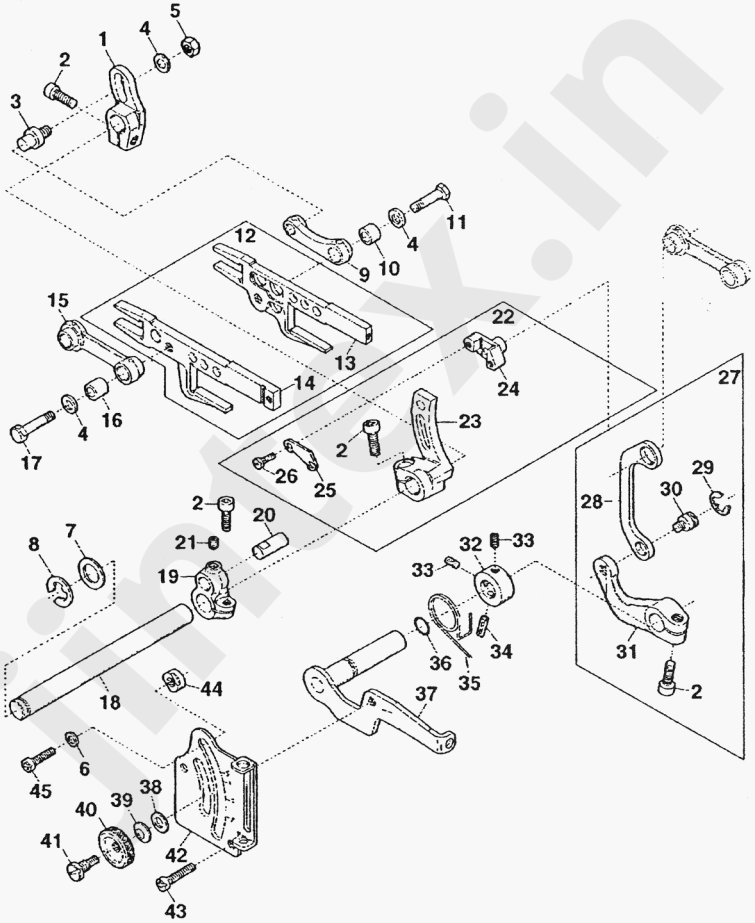
1
2
3
4
5
6
7
8
9
10
11
12
13
14
15
16
17
18
19
20
21
22
23
24
25
26
27
28
29
30
31
32
33
34
35
36
37
38
39
40
41
42
43
44
45

jintex.in

Ref. No.	Parts No.	Amt. Req.
1	6200254	1
2	120006	4
3	6200119	1
4	300000	3
5	100002	1
6	000669	2
7	6200263	1
8	6200038	1
9	6100262	1
10	6200118	1
11	140001	1
12	6200127	1
13	6200184	1
14	6200183	1
15	6200190	1
16	6200265	1
17	140000	1
18	6200255	1
19	6200256	1
20	6200142	1

Ref. No.	Parts No.	Amt. Req.
21	160007	1
22	6200165	1
23	6200166	1
24	6200167	1
25	6200168	1
26	110033	2
27	6200130	1
28	6100255	1
29	6100343	1
30	6100360	1
31	6200125	1
32	6100235	1
33	160001	2
34	000690	1
35	6200123	1
36	6100363	1
37	6200126	
38	000528	
39	000561	
40	100000	1

Ref. No.	Parts No.	Amt. Req.
41	190001	1
42	6200131	1
43	110016	2
44	6100269	2
45	110017	2

jintex.in

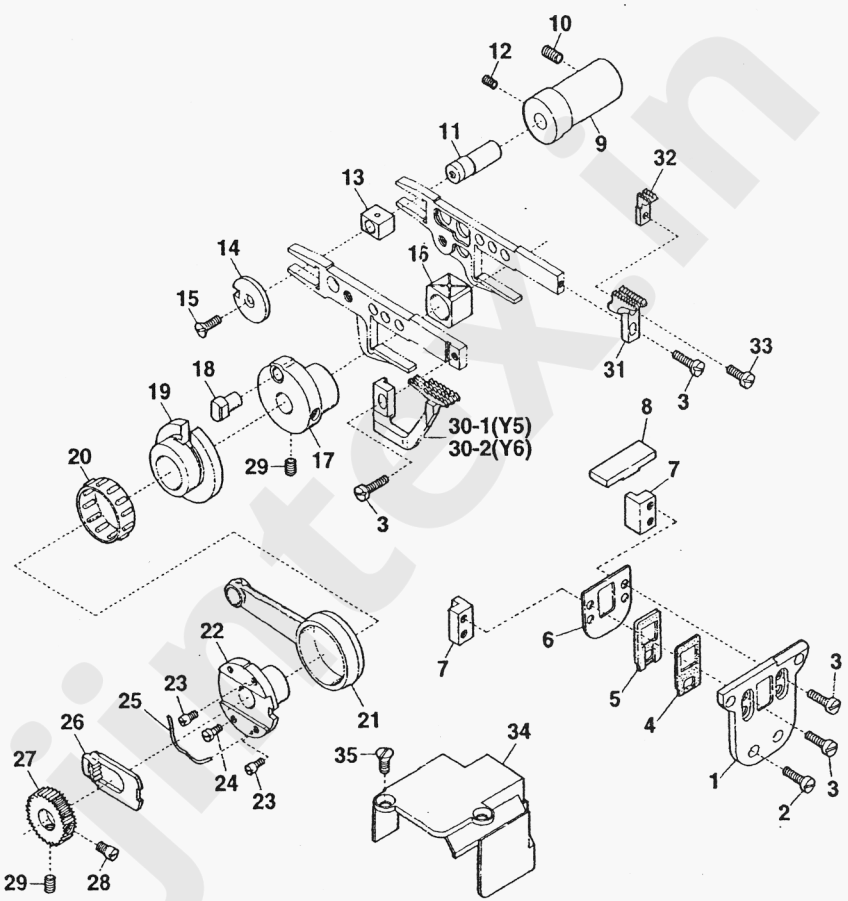
10
12
9
11
32
13
14
16
15
33
31
3
18
19
30-1(Y5)
30-2(Y6)
8
20
29
17
7
3
22
6
7
3
23
25
5
21
4
26
34
35
27
24
23
1
3
2
29
28

jintex.in

Ref. No.	Parts No.	Amt. Req.
1	6200173	1
2	110064	4
3	110004	6
4	6200174	1
5	6200175	1
6	6200177	1
7	6200178	2
8	6200176	1
9	6200253	1
10	160007	1
11	6200166	1
12	160001	1
13	6200140	1
14	6200139	1
15	130002	1
16	6200138	1
17	6200141	1
18	6100366	1
19	6100281	1
20	6100282	1

Ref. No.	Parts No.	Amt. Req.
21	6200133	1
22	6100284	1
23	180002	2
24	110070	1
25	6100285	1
26	6100286	1
27	6200137	1
28	180003	1
29	160003	3
30 1	6209000	1
30 2	6209006	1
31	6209001	1
32	6209002	1
33	110026	1
34	6200257	1
35	130003	2

Ref. No.	Parts No.	Amt. Req.

jintex.in

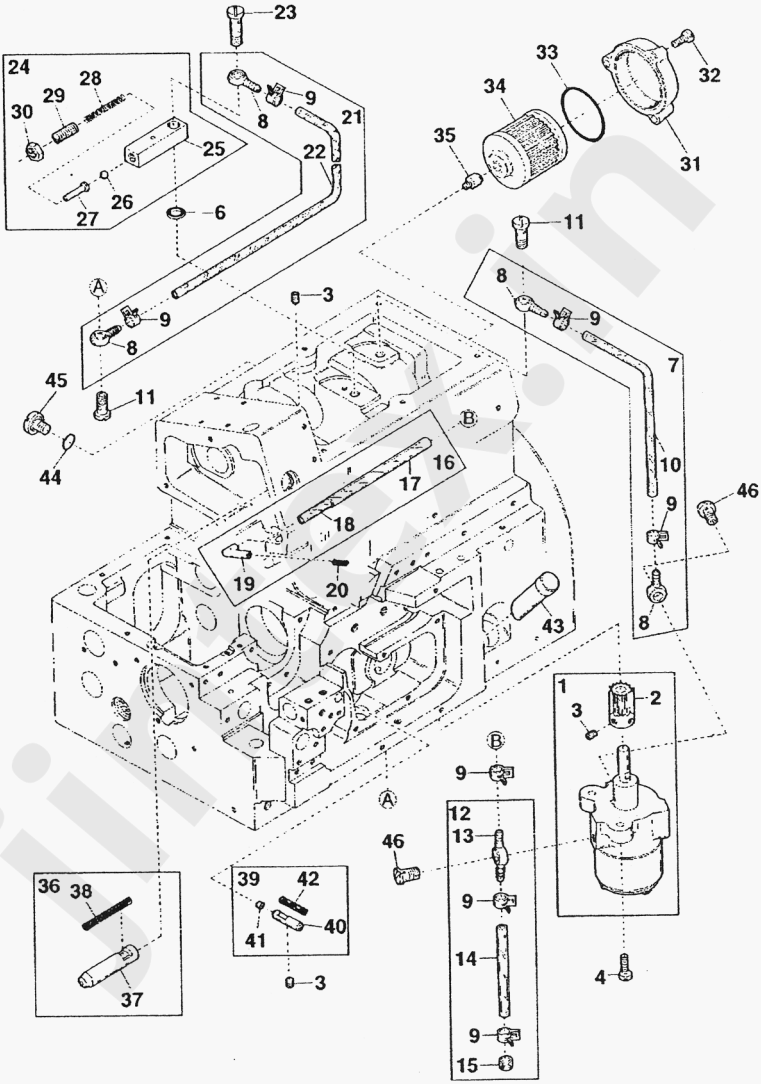
23
24
28
29
30
25
26
27
6
9
8
21
22
33
32
34
35
31
11
A
3
9
8
8
9
7
45
11
44
B
16
17
18
19
20
10
46
9
8
43
1
2
3
B
9
A
12
13
46
9
14
9
15
4
36
38
37
39
42
41
40
3

jintex.in

Ref. No.	Parts No.	Amt. Req.
1	6200197	1
2	6200149	1
3	160001	4
4	110016	2
5		
6	000567	1
7	6200298	1
8	6100310	4
9	6100303	7
10	6200300	1
11	320008	2
12	6200207	1
13	6100308	1
14	6200150	1
15	6200206	1
16	6200193	1
17	6200194	1
18	6200195	1
19	6200196	1

Ref. No.	Parts No.	Amt. Req.
21	6200299	1
22	6200301	1
23	320009	1
24	6200267	1
25	6200266	1
26	6200037	1
27	6200028	1
28	6200269	1
29	006861	1
30	000419	1
31	6100002	1
32	110045	3
33	6100370	1
34	6100296	1
35	6100297	1
36	6200247	1
37	6200248	1
	310081	1
	6200186	1

Ref. No.	Parts No.	Amt. Req.
41	000456	1
42	310090	1
43	6200074	1
44	6100363	1
45	110053	1
46	320012	2

jintex.in

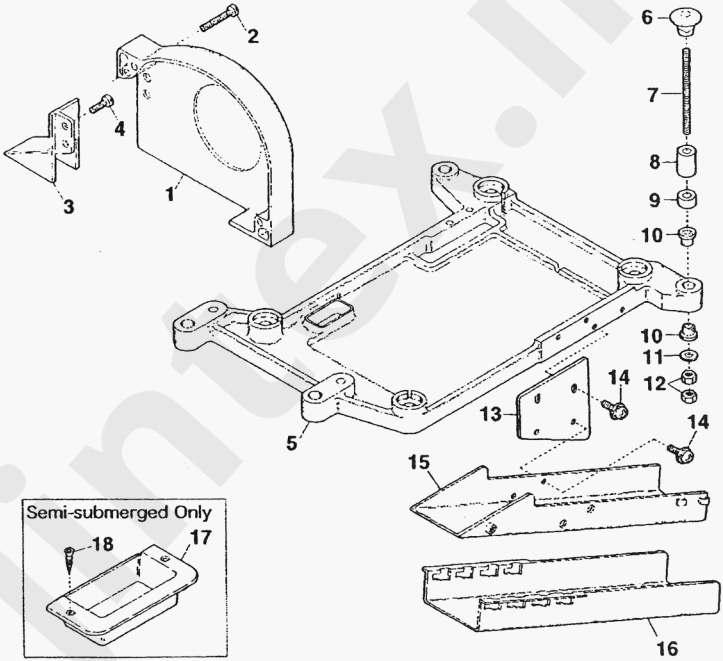

jintex.in

Ref. No.	Parts No.	Amt. Req.
1	6200303	1
2	110015	2
3	6200304	1
4	110013	2
5	6200148	1
6	000070	4
7	009861	4
8	6200210	4
9	6101005	4
10	6100326	8
11	000162	4
12	000016	8
13	6200152	1
14	005624	4
15	6200146	1
16	6200147	1
17	6200151	1
18	350007	2

Ref. No.	Parts No.	Amt. Req.

Ref. No.	Parts No.	Amt. Req.

jintex.in

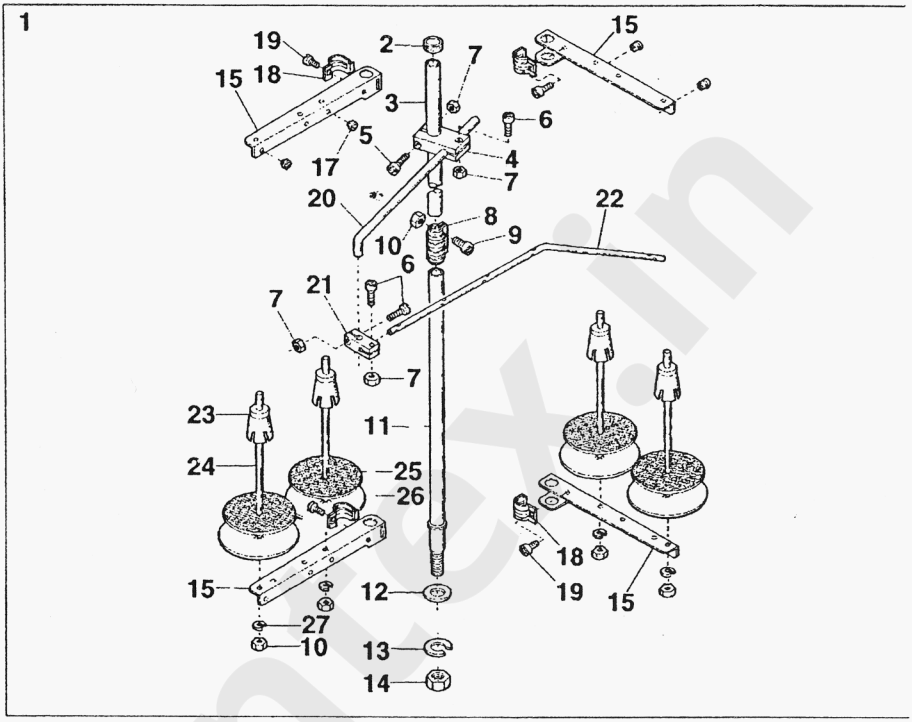
1
19
2
7
15
18
15
3
6
5
4
17
7
20
22
8
10
9
6
21
7
7
23
11
24
25
26
18
15
12
19
15
27
10
13
14

jintex.in

Ref. No.	Parts No.	Amt. Req.
1	6802629	1
2	6802601	1
3	6802602	1
4	6802603	1
5	911002	1
6	911001	3
7	910001	4
8	6802604	1
9	911006	2
10	910000	6
11	6802605	1
12	930052	1
13	930053	1
14	910003	1
15	6802606	4
16	6802607	2
17	6802608	4
18	6802609	4
19	911060	4
20	6802610	1

Ref. No.	Parts No.	Amt. Req.
21	6820690	1
22		
23	6802613	4
24	6802614	4
25	6802615	4
26	6802616	4
27	930055	4
28	6802612	1

Ref. No.	Parts No.	Amt. Req.

jintex.in

Teile Nr.	Seite	Abb. Nr.		Teile Nr.	Seite	Abb. Nr.		Teile Nr.	Seite	Abb. Nr.
10	2b	6		110001	6b	29		120010	8b	17
14	4b	44		110001	7b	21		120013	9b	32
14	9b	35		110002	6b	36		120017	1b	28
16	14b	12		110002	9b	36		120017	8b	20
35	6b	26		110003	2b	28		120049	6b	2
70	14b	6		110004	7b	15		120049	7b	2
162	14b	11		110004	8b	34		120049	9b	2
177	4b	9		110004	12b	3		120049	10b	2
178	4b	7		110006	6b	18		130001	9b	16
322	4b	26		110009	4b	36		130002	12b	15
393	6b	45		110009	6b	27		130003	3b	25
419	13b	30		110009	9b	12		130003	12b	35
444	2b	9		110009	10b	14		140000	11b	17
444	8b	42		110011	6b	33		140001	11b	11
456	13b	41		110012	1b	12		140002	10b	12
482	8b	6		110012	2b	11		140003	6b	13
487	8b	14		110012	7b	18		140004	9b	21
526	5b	23		110012	8b	8		140014	7b	30
528	11b	38		110013	2b	2		150004	3b	10
532	7b	14		110013	3b	7		160001	1b	8
561	11b	39		110013	4b	2		160001	8b	31
567	6b	48		110013	6b	46		160001	9b	10
567	13b	6		110013	14b	4		160001	11b	33
629	9b	26		110015	14b	2		160001	12b	12
644	1b	5		110016	1b	18		160001	13b	3
644	4b	25		110016	11b	43		160002	6b	4
653	4b	30		110016	13b	4		160002	7b	4
669	11b	6		110017	11b	45		160002	9b	23
688	7b	27		110026	4b	45		160003	6b	8
690	11b	34		110026	12b	33		160003	7b	8
726	1b	32		110031	1b	14		160003	10b	8
779	9b	31		110033	11b	26		160003	12b	29
1123	1b	4		110035	4b	40		160007	5b	2
1203	2b	21		110035	7b	12		160007	8b	26
1230	8b	45		110036	10b	17		160007	11b	21
3636	5b	22		110045	1b	6		160007	12b	10
3637	1b	10		110045	13b	32		160016	6b	19
3637	2b	23		110046	7b	26		160027	5b	14
3637	6b	23		110048	3b	3		170032	2b	5
4097	8b	47		110050	8b	36		170045	8b	11
4237	8b	39		110053	13b	45		170047	8b	15
5036	8b	43		110054	2b	32		170049	4b	34
5075	1b	30		110064	3b	19		180001	8b	12
5345	6b	31		110064	12b	2		180002	12b	23
5624	14b	14		110065	8b	22		180003	12b	28
6035	4b	24		110070	12b	24		180014	10b	18
6816	1b	22		110071	9b	17		190001	11b	41
6861	13b	29		110073	4b	29		190015	2b	13
9861	14b	7		110076	2b	8		190081	8b	1
100000	11b	40		110106	2b	15		190087	4b	10
100001	1b	13		120006	6b	6		210009	9b	30
100001	8b	23		120006	7b	6		215709	8b	3
100002	11b	5		120006	9b	5		300000	11b	4
100073	8b	2		120006	10b	5		300004	1b	27
110001	4b	22		120006	11b	2		300008	6b	12

Teile Nr.	Seite	Abb. Nr.		Teile Nr.	Seite	Abb. Nr.		Teile Nr.	Seite	Abb. Nr.
300008	9b	20		6100310	13b	8		6200088	6b	3
300008	10b	11		6100326	14b	10		6200089	6b	32
300043	1b	25		6100333	3b	14		6200090	6b	39
310001	6b	42		6100343	11b	29		6200091	7b	1
310005	6b	40		6100360	11b	30		6200092	7b	7
310065	9b	28		6100363	11b	36		6200092	9b	9
310073	13b	20		6100363	13b	44		6200092	10b	7
310081	13b	38		6100366	12b	18		6200093	7b	5
310089	6b	16		6100367	7b	3		6200094	7b	11
310089	9b	24		6100370	13b	33		6200095	7b	10
310090	13b	42		6101005	14b	9		6200096	7b	25
310109	5b	25		6109401	1b	31		6200097	7b	28
320008	6b	47		6200015	1b	15		6200098	7b	29
320008	13b	11		6200016	1b	16		6200100	7b	19
320009	13b	23		6200017	2b	22		6200101	6b	15
320012	13b	46		6200019	4b	6		6200103	8b	28
330000	3b	17		6200020	8b	46		6200104	8b	21
330008	3b	16		6200022	7b	13		6200105	8b	18
350007	14b	18		6200023	4b	46		6200106	8b	30
390660	2b	30		6200024	2b	25		6200107	10b	10
910000	15b	10		6200025	4b	14		6200108	10b	1
910001	15b	7		6200026	4b	5		6200109	10b	9
910003	15b	14		6200027	2b	20		6200110	9b	15
911001	15b	6		6200028	13b	27		6200111	9b	19
911002	15b	5		6200029	1b	23		6200112	9b	25
911006	15b	9		6200030	7b	24		6200113	9b	22
911060	15b	19		6200031	4b	11		6200114	9b	14
930052	15b	12		6200032	4b	13		6200115	9b	27
930053	15b	13		6200033	1b	24		6200116	9b	18
930055	15b	27		6200034	8b	38		6200117	9b	13
6100002	13b	31		6200035	3b	22		6200118	11b	10
6100017	7b	16		6200036	3b	15		6200119	11b	3
6100020	6b	34		6200037	13b	26		6200120	9b	37
6100029	1b	29		6200038	11b	8		6200123	11b	35
6100056	4b	3		6200066	1b	1		6200125	11b	31
6100057	4b	4		6200068	7b	22		6200126	11b	37
6100059	4b	12		6200070	1b	7		6200127	11b	12
6100062	4b	8		6200071	1b	9		6200130	11b	27
6100111	4b	37		6200072	1b	3		6200131	11b	42
6100125	5b	7		6200073	2b	24		6200132	5b	29
6100127	5b	8		6200074	13b	43		6200133	12b	21
6100235	11b	32		6200075	3b	1		6200137	12b	27
6100255	11b	28		6200076	3b	21		6200138	12b	16
6100262	11b	9		6200077	3b	4		6200139	12b	14
6100269	11b	44		6200078	1b	17		6200140	12b	13
6100281	12b	19		6200079	4b	1		6200141	12b	17
6100282	12b	20		6200080	9b	3		6200142	11b	20
6100284	12b	22		6200080	10b	3		6200146	14b	15
6100285	12b	25		6200081	5b	34		6200147	14b	16
6100286	12b	26		6200082	8b	25		6200148	14b	5
6100296	13b	34		6200083	5b	17		6200149	13b	2
6100297	13b	35		6200084	5b	19		6200150	13b	14
6100303	13b	9		6200085	6b	11		6200151	14b	17
6100308	13b	13		6200086	6b	7		6200152	14b	13
6100310	6b	38		6200087	6b	14		6200153	6b	28

Teile Nr.	Seite	Abb. Nr.		Teile Nr.	Seite	Abb. Nr.		Teile Nr.	Seite	Abb. Nr.
6200154	8b	19		6200219	3b	18		6200280	4b	39
6200155	6b	41		6200220	2b	4		6200281	4b	42
6200156	2b	27		6200221	7b	20		6200282	4b	43
6200157	6b	43		6200222	7b	17		6200283	4b	41
6200158	6b	44		6200223	7b	23		6200284	4b	21
6200159	2b	19		6200224	3b	12		6200285	2b	7
6200160	8b	5		6200225	2b	10		6200286	9b	11
6200162	5b	3		6200226	2b	12		6200287	4b	33
6200163	5b	36		6200227	2b	14		6200288	8b	24
6200163	6b	20		6200228	1b	19		6200289	8b	27
6200164	4b	38		6200229	4b	35		6200290	8b	29
6200165	11b	22		6200232	6b	37		6200291	8b	16
6200166	11b	23		6200234	5b	16		6200292	8b	4
6200166	12b	11		6200235	5b	24		6200293	8b	7
6200167	11b	24		6200236	5b	26		6200294	8b	9
6200168	11b	25		6200237	5b	32		6200295	8b	10
6200169	9b	33		6200238	5b	18		6200296	6b	49
6200170	2b	31		6200239	5b	30		6200297	8b	13
6200171	3b	13		6200240	5b	31		6200298	13b	7
6200172	1b	20		6200241	5b	27		6200299	13b	21
6200173	12b	1		6200242	5b	28		6200300	13b	10
6200174	12b	4		6200243	5b	21		6200301	13b	22
6200175	12b	5		6200244	5b	20		6200302	1b	2
6200176	12b	8		6200245	5b	35		6200303	14b	1
6200177	12b	6		6200246	6b	17		6200304	14b	3
6200178	12b	7		6200247	13b	36		6200305	5b	1
6200179	5b	15		6200248	13b	37		6200306	6b	10
6200180	3b	23		6200249	6b	24		6200307	6b	9
6200181	3b	24		6200250	6b	25		6200309	1b	21
6200182	1b	26		6200251	7b	9		6200310	2b	26
6200183	11b	14		6200253	12b	9		6200373	5b	10
6200184	11b	13		6200254	11b	1		6200375	2b	33
6200185	13b	40		6200255	11b	18		6200377	10b	4
6200186	13b	39		6200256	11b	19		6207001	8b	33
6200187	6b	5		6200257	12b	34		6207002	8b	37
6200188	9b	1		6200259	5b	33		6207003	8b	35
6200189	10b	6		6200260	9b	6		6207017	8b	40-1
6200190	11b	15		6200261	9b	4		6207018	8b	44
6200191	3b	20		6200262	9b	7		6207020	8b	32-1
6200192	3b	2		6200263	9b	8		6207021	8b	32-2
6200193	13b	16		6200265	11b	16		6207022	8b	40-2
6200194	13b	17		6200266	13b	25		6207643	8b	41
6200195	13b	18		6200267	13b	24		6208000	6b	30-1
6200196	13b	19		6200268	5b	9		6208002	6b	30-2
6200197	13b	1		6200269	13b	28		6209000	12b	30-1
6200206	13b	15		6200270	5b	11		6209001	12b	31
6200207	13b	12		6200271	6b	1		6209002	12b	32
6200209	3b	11		6200272	4b	28		6209006	12b	30-2
6200210	14b	8		6200273	4b	31		6209100	6b	21
6200211	3b	6		6200274	4b	32		6209200	6b	35
6200212	3b	5		6200275	4b	27		6209201	10b	16
6200213	5b	6		6200276	4b	23		6209300	9b	29
6200214	5b	5		6200277	4b	15		6209301	10b	15
6200217	1b	11		6200278	9b	34		6802601	15b	2
6200218	2b	1		6200279	10b	13		6802602	15b	3

Teile Nr.	Seite	Abb. Nr.		Teile Nr.	Seite	Abb. Nr.		Teile Nr.	Seite	Abb. Nr.
6802603	15b	4								
6802604	15b	8								
6802605	15b	11								
6802606	15b	15								
6802607	15b	16								
6802608	15b	17								
6802609	15b	18								
6802610	15b	20								
6802612	15b	28								
6802613	15b	23								
6802614	15b	24								
6802615	15b	25								
6802616	15b	26								
6802629	15b	1								
6820690	15b	21								
62100263	11b	7								

jintex.in